USER MANUAL WT901B

Inclinometer Sensor

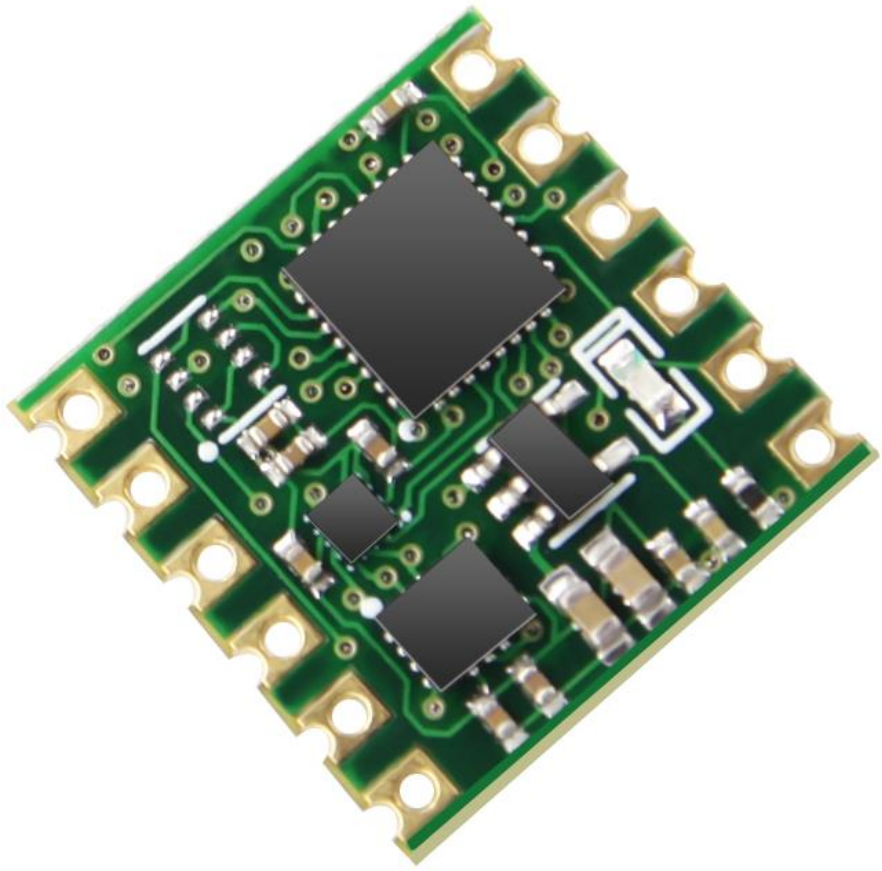

Tutorial link

Google Drive

Link to instructions DEMO:
WITMOTION Youtube Channel
WT901B Playlist

If you have technical problems or cannot find the information that you need in the provided documents, please contact our support team. Our engineering team is committed to providing the required support necessary to ensure that you are successful with the operation of our AHRS sensors.

Contact

Technical Support Contact Info

Application

- AGV Truck
- Platform Stability
- Auto Safety System
- 3D Virtual Reality
- Industrial Control
- Robot
- Car Navigation
- UAV
- Truck-mounted Satellite Antenna Equipment

Contents

Tutorial link ..... - 2 -

Contact ..... - 2 -

Application ..... - 2 -

Contents ..... - 3 -

1 Introduction ..... - 4 -

1.1 Warning Statement ..... - 5 -

2 Use Instructions ..... - 6 -

3 Software Introduction ..... - 7 -

4 MCU Connection ..... - 8 -

5 IIC Connection ..... - 9 -

1 Introduction

The WT901B is a multi-sensor device detecting acceleration, angular velocity, angle as well as magnetic filed. The small outline makes it perfectly suitable for industrial retrofit applications such as condition monitoring and predictive maintenance. Configuring the device enables the customer to address a broad variety of use cases by interpreting the sensor data by smart algorithms.

WT901B's scientific name is AHRS IMU sensor. A sensor measures 3-axis angle, angular velocity, acceleration, magnetic field. Its strength lies in the algorithm which can calculate three-axis angle accurately.

WT901B is an CE standard accelerometer. It is employed where the highest measurement accuracy is required. WT901B offers several advantages over competing sensor:

• Heated for best data availability: new WITMOTION patented zero-bias automatic detection calibration algorithm outperforms traditional accelerometer sensor

• High precision Roll Pitch Yaw (X Y Z axis) Acceleration + Angular Velocity + Angle + Magnetic Field output

• Low cost of ownership: remote diagnostics and lifetime technical support by WITMOTION service team

• Developed tutorial: providing manual, datasheet, Demo video, free software for Windows computer, APP for Android smartphones , and sample code for MCU integration including 51 serial, STM32, Arduino, Matlab, Raspberry Pi, communication protocol for project development

• WITMOTION sensors have been praised by thousands of engineers as a recommended attitude measurement solution

1.1 Warning Statement

- Putting more than 5 Volt across the sensor wiring of the main power supply can lead to permanent damage to the sensor.
- VCC cannot connect with GND directly, otherwise it will lead to the burning of the circuit board.
- For proper instrument grounding: use WITMOTION with its original factory-made cable or accessories.
- For secondary developing project or integration: use WITMOTION with its compiled sample code.

2 Use Instructions

Hit the hyperlink direct to the document or download center:

- Software and driver download
- Quick-guide Manual
- Teaching Video
- Common Software with detailed instructions
- SDK(sample code)
- SDK Tutorial Documentation
- Communication Protocol

3 Software Introduction

Software function introduction

(**Ps**. You can check the functions of the software menu from the link.)

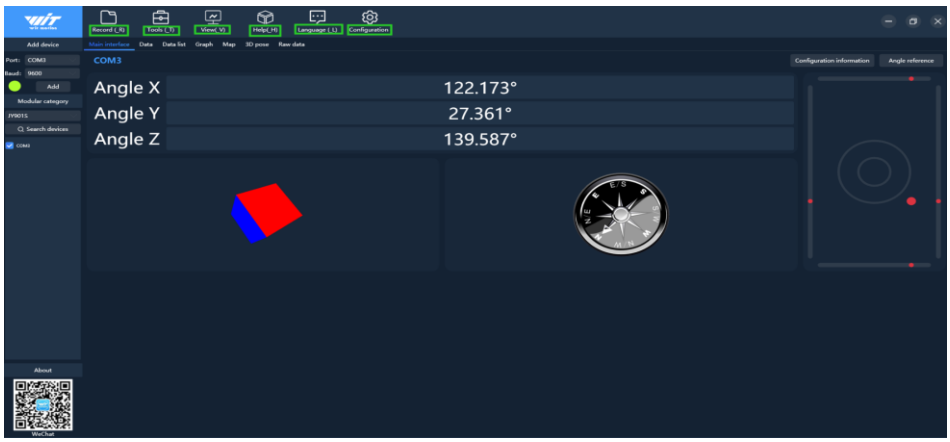

SOFTWARE INSTRUCTIONS 1
How to download software and driver 1
PC Software Download: 1
Install Driver 1
Contents 2
1 Use Instructions with PC 4
1.1 Connect with wiring sensor 4
1.2 Connecting with Bluetooth Sensor 11
1.2.1 Select Sensor Model 11
1.2.2 Search Device 11
2 Main Menu 13
2.1 Function configuration 13
2.1.1 Record 13
2.1.2 Data playback 15
2.1.3 Tools 15
2.1.4 View 15
2.1.5 Help 15
2.1.6 Language 15
2.1.7 Configuration 15
2.2 Data Review 17
2.2.1 Main Interface 17
2.2.2 Curve Display 17
2.2.3 Map Function 18
2.2.4 3D Demo 19
2.2.5 Raw data 20
3. Configuration 21
3.1 Read sensor configuration 21
3. 2 System settings 22
3.2.1 Reset 22
3.2.2 Sleep and disable sleep settings 23
3.2.3 Alarm setting 24

4 MCU Connection

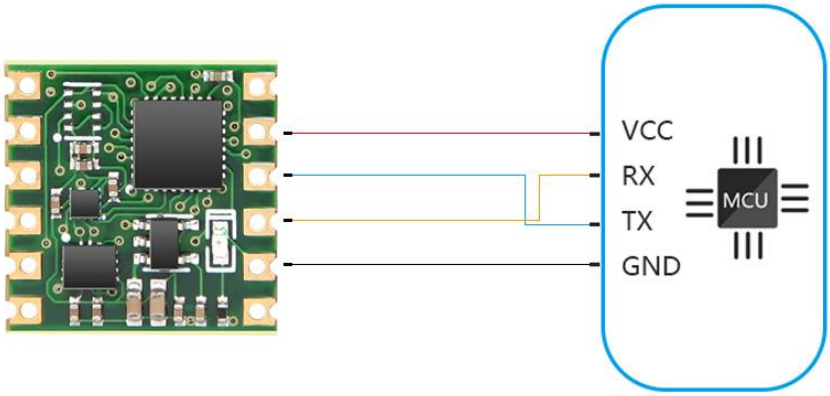

5 IIC Connection

The WT901B module can be connected to the MCU through the IIC interface. The connection method is shown in the figure below.

Note:
1. In order to connect multiple modules on the IIC bus, the IIC bus of the module is an open-drain output. When the MCU is connected to the module, the IIC bus needs to be pulled up to VCC through a 4.7K resistor.

2. VCC is 3.3V, it must be connected to the power supply. Directly using the power supply on the module may cause a voltage drop, so that the actual voltage of the module is not 3.3 ~ 5V.

1. The internal pull-up of the MCU is a weak pull-up, the driving capacity is limited, and an external pull-up on the hardware is required.

