CASABREWS

INSTRUCTION MANUAL

Espresso Coffee Machine

Model: CM5418B-GS

support@casabrews.com

UK REP

Business name: GSG CONSULTING GROUP LIMITED
Business address: Montague houses unit 3 Matthew street Manchester m12 5bb
Email: GSG--GROUP@outlook.com
Tel: 01612734496

HOUSEHOLD USE ONLY

Please read all instructions carefully before using the product

CONTENTS

IMPORTANT SAFEGUARDS 1-2

SAVE THESE INSTRUCTIONS 3

SPECIFICATIONS 3

KNOW YOUR COFFEE MAKER 4

CONTROL PANEL 5

BEFORE FIRST USE 6

SELECTING THE FILTERS SIZE 7

MAKING ESPRESSO 7

MAKING HOT WATER 8

FROTHING MILK/ MAKING CAPPUCCINO OR LATTE 8

OVER-HEATING PROTECTION 9

PROGRAMMING THE VOLUME 9-10

AUTO SHUT-OFF FUNCTION 10

CLEANING AND MAINTENANCE 10-12

- CLEANING THE APPLIANCE 10
- CLEANING THE PORTAFILTER AND THE FILTERS 10
- CLEANING THE STEAM WAND 10-11
- CLEANING THE BREW HEAD 11

DESCALING THE APPLIANCE 12

TROUBLESHOOTING 13-14

WARRANTY INFORMATION 15

CUSTOMER SUPPORT 15

IMPORTANT SAFEGUARDS

Before using this appliance, please follow these basic precautions:

01. Read all instructions and keep them for future reference.

02. Before using the appliance, check that the voltage of the wall outlet corresponds to the voltage marked on the rating plate.

03. This appliance is supplied with a grounded plug.

04. To protect against fire, electric shock, and injury do not immerse the power cord or plug in water or other liquids.

05. Remove the plug from the wall outlet before cleaning and when not in use. Allow the appliance to cool down completely before removing or attaching components, or before cleaning.

06. Do not operate any appliance with a damaged power cord or plug, after the appliance has malfunctioned, or is dropped or damaged in any way. Contact the manufacturer by email (support@casbrews.com) how to deal with a damaged appliance.

07. The use of accessory attachments not recommended by the appliance manufacturer may result in fire, electric shock or injury.

08. Place the appliance on a flat surface or table. Do not hang the power cord over the edge of the table or counter.

09. Ensure the power cord does not touch the hot surface of the appliance.

10. Do not place the coffee maker on a hot surface or next to an open flame.

11. To disconnect the appliance, turn it OFF, then remove the plug from the wall outlet. When removing the plug from the outlet, hold by the plug, never pull on the cord.

12. Do not use the appliance other than for the intended use.

13. Always supervise closely when the appliance is used by or near children.

14. Be careful when using the appliance, as steam may escape and pose a risk of getting scalded.

15. Do not touch any hot surface of the appliance (including the steam wand and the steel mesh). Only use the handle or knobs.

16. Do not operate the coffee maker without water.

17. Removing the water tank during the brewing cycle poses a risk of getting scalded.

18. Do not remove the portafilter when in use or when steam or hot water escape from the holder.

19. Release pressure through the steam wand before removing the water tank cover or portafilter.

20. This appliance is not intended for use by children or any individuals with reduced physical, sensory or mental capabilities, or lack of experience and knowledge, unless they have been given adequate instruction concerning the use of the appliance and/or are under supervision by a responsible adult.

21. Children should be supervised to ensure that they do not play with the appliance.

22. This appliance is intended to be used in household and similar applications such as:

– staff kitchen areas in shops, offices and other working environments;

– farm houses;

– bed and breakfast type environments.

Do not use outdoors.

Do not place on or near a hot gas or electric burner, or in a heated oven.

SAVE THESE INSTRUCTIONS

NOTE REGARDING THE PLUG

This appliance has a polarized plug (one blade is wider than the other). To reduce the risk of electric shock, this plug is intended to fit into a polarized outlet only one way. If the plug does not fit fully into the outlet, reverse the plug. If it still does not fit, contact a qualified electrician. Do not attempt to modify the plug in any way.

NOTE REGARDING THE CORD

a) A short power supply cord (or detachable power supply cord) is provided in order to reduce the risk of becoming entangled in or tripping over a longer cord.

b) Longer detachable power supply cords or extension cords are available and may be used if care is exercised in their use.

c) If a longer detachable power supply cord or extension cord is used, please note the following:

(1) The marked electrical rating of the detachable power supply cord or extension cord should be at least as great as the electrical rating of the appliance;

(2) The cord should be arranged so that it will not drape over the countertop or tabletop where children can pull on it, or people could trip over it;

(3) If the appliance is of the grounded type, the cord or extension cord should be a grounding-type 3-wire cord.

SPECIFICATION:

Model:	CM5418B-GS
Voltage:	220-240 V~ 50-60 Hz
Power:	1250-1450 W
Capacity of Water Tank:	1.0 L
Accessories:	1x Single Filter, 1x Double Filter, 1x Portafilter, 1x Coffee Spoon, 1x Cleaning Needle

KNOW YOUR COFFEE MACHINE

(Product may be subject to change without prior notice)

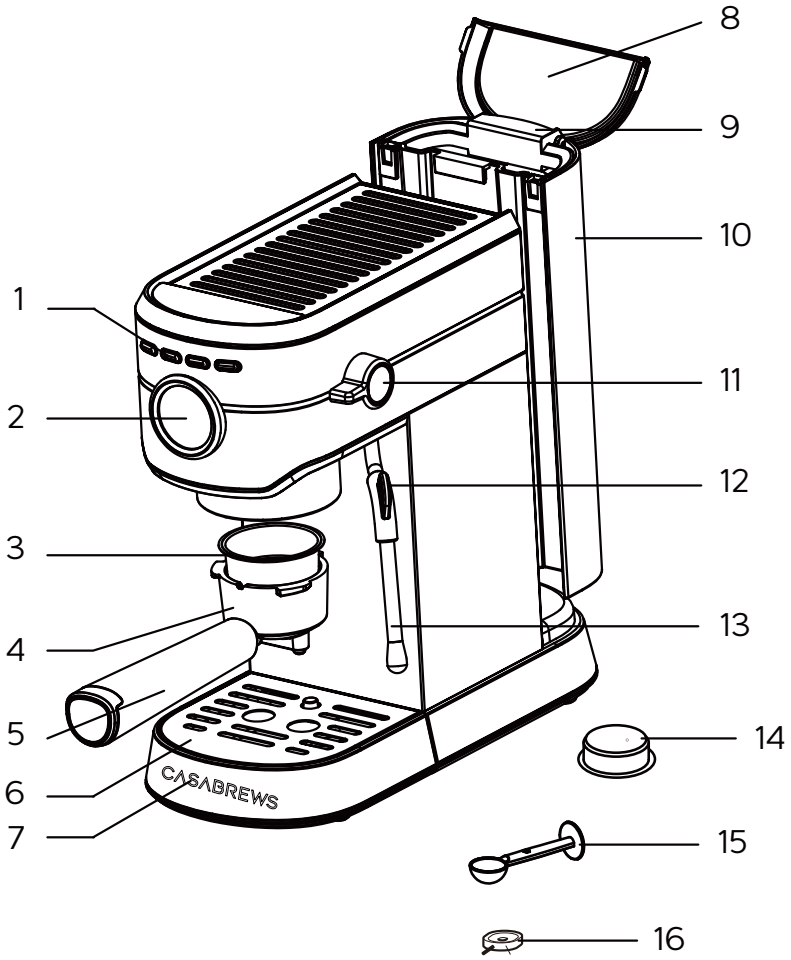

1. Control Panel
2. Pressure Gauge
3. Dual Wall 2 CUP Filter D.51mm
4. Filter Holder D.51mm
5. Portafilter D.51mm
6. Drip plate
7. Drip tray
8. Water Tank Cover
9. Handle
10. Water tank
11. Knob
12. Steam handle
13. Steam wand
14. Dual Wall 1 Cup Filter D.51mm
15. Coffee spoon
16. Cleaning Needle

CONTROL PANEL

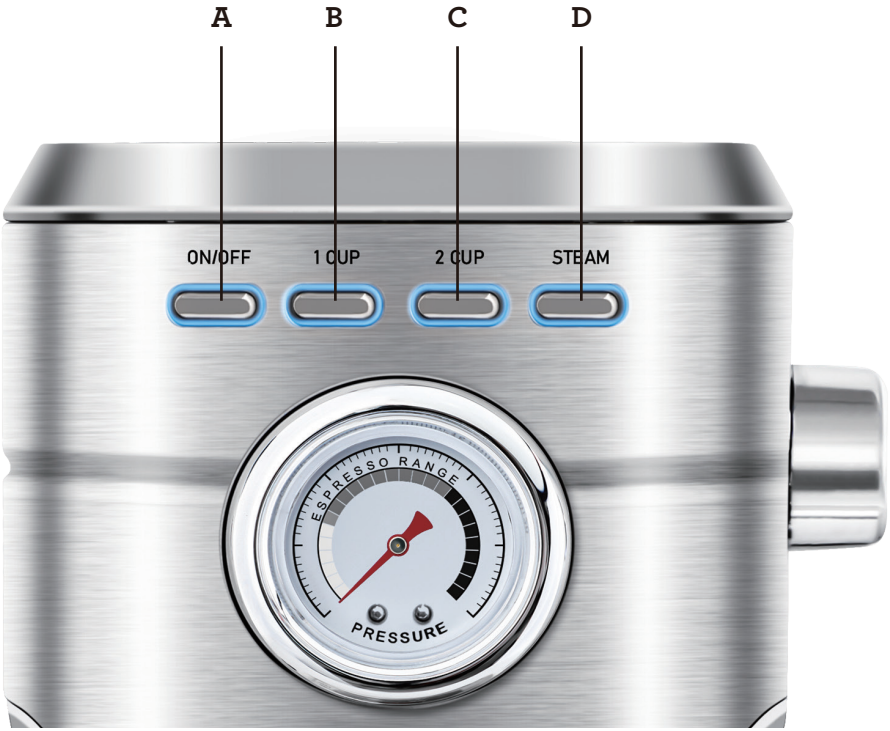

A. Power Button: Press to turn on/off your coffee machine.

B. 1 CUP Button: Press to start/stop brew a single shot espresso.

C. 2 CUP Button: Press to start/stop brew a double shot or double shots espresso.

D. STEAM Button: Press to enter/exit steam mode.

BEFORE FIRST USE

To ensure the first cup of coffee tastes excellent, please prepare the coffee maker as follows:

01. Remove the plug at the bottom of the tank.

02. Fill the water tank. Do not exceed the “MAX” mark. Close the tank cover.

03. Place the brewing filter without any ground coffee into the portafilter.

04. Place a cup/mug under the steam wand.

05. Connect the appliance to a power source, press the “ON/OFF” button. The power indicator will be illuminated and all indicators will briefly flash. The machine will start to preheat.

06. When the indicators stop flashing, the preheating process is finished.

07. Turn the steam knob to “ / ”position. The machine will start to make hot water.

08. Let the hot water come out of the steam wand for 8 seconds, then return the steam knob to the off position. This process lets the water flow into the empty pump for the first use.

09. Discard the used water.

NOTE: There may be noise when the appliance pumps the water out the first time. This is normal. The appliance is releasing some air from the system. After about 20 seconds, the noise should stop.

SELECTING THE FILTERS SIZE

This machine includes 2 dual walls filters.

Use dual wall flters if using pre-ground coffee. Dual wall filters regulate the pressure and help to optimize the extraction regardless of the grind, dose or freshness.

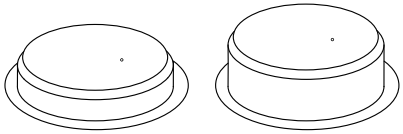

The provided filters are designed for:
ONE CUP filter = approx. 7-9g
TWO CUP filter = approx. 13-15g

Insert either the ONE CUP or TWO CUP filter into the portafilter.

MAKING ESPRESSO

01. Remove the portafilter by turning it clockwise. Place the brewing filter into the portafilter, making sure it fits properly.

02. Using the coffee spoon, add ground coffee to the brewing filter (a spoonful of ground coffee will make about one cup of top-grade coffee) then tamp the ground coffee down tightly with the spoon.

03. Align the portafilter with the " 🔓 " mark and turn it counter-clockwise to the " 🔒 " position.

04. Place a cup on the drip plate.

05. Select single cup " 1 CUP " or double cup " 2 CUP " . The brewing will begin shortly.

06. The appliance will stop automatically once the brewing process is finished.

⚠ WARNING Do not leave the coffee maker unattended during brewing.

07. To remove the filter after brewing, turn the portafilter clockwise.

MAKING HOT WATER

Place a cup or mug under the steam wand. Turn the knob to " ⏻/💧💧 " position and hot water will dispense from the steam wand. Return knob to "off" when done.

FROTHING MILK/ MAKING CAPPUCCINO OR LATTE

Before frothing the milk, release steam for 10 seconds.

NOTE: When using the steamer, the portafilter must be assembled in position.

01. Press the "STEAM" button - the steam indicator light will flash. When the steam indicator light is continuously lit, the preheating is finished.

02. Prepare espresso first.

03. When the espresso is ready, fill a jug with about 120ml/4 oz of milk. Using cold, whole milk is recommended.

A jug with a diameter of 70-75mm is recommended. Please bear in mind that the milk doubles in volume, so make sure the jug has sufficient height.

04. Insert the steam wand about two millimeters into the milk, then turn the knob to the " ⏻/💧💧 " position. Steam will come out from the steam outlet. Froth the milk by moving the jug up and down.

⚠ WARNING Be careful when operating the steam wand. Steam may result in burns or injury.

05. Turn knob to "off ". Then press the steam button to exit steam mode.

NOTE: Clean the steam nozzle with a damp sponge or cloth immediately after use, but do so carefully as the wand will be hot!

06. Pour the frothy milk into the prepared espresso. The cappuccino is now ready. Sweeten to taste and if desired, sprinkle the froth with a little cocoa powder.

The steam wand can be used to froth milk, dispense hot water, or make hot chocolate.

OVER-HEATING PROTECTION

After using the steam function, the 1 cup and 2 cup button indicators will flash alternately if you immediately press the buttons to brew coffee again, indicate the temperature of the boiler is too high. And the machine has gone into over-heating protection mode.

To solve this, turn the steam knob to " / " position and let hot water come out of the steam wand for 8 seconds. This will help to cool the boiler down quickly. Then the machine will be ready for the next brew.

If you do not want to brew coffee when the high-temperature warning occurs, you can press the 1 cup or 2 cup button again to cancel.

PROGRAMMING THE VOLUME

To set the volume of 1 cup

Press and hold the "1 cup" button for 3 seconds, the "1 cup" indicator will continuously lit and the "2 cup" indicator will off. Press the "1 cup" button again, the coffee will start to dispense and the "1 cup" indicator will flash at the same time.

When the desired amount is reached, press the "1 cup" button again and the coffee will stop dispensing.

You have now programmed the coffee maker to the size of a single cup as per your preferences, and this will be saved for future use.

NOTE: The adjustable dispensing amount for a single cup ranges between 30ml/1oz and 70ml/2.37oz.

To set the volume of 2 cups

Press and hold the "2 cup" button for 3 seconds, the "2 cup" indicator will continuously lit and the "1 cup" indicator will off. Press the "2 cup" button again, the coffee will start to dispense and the "2 cup" indicator will flash at the same time.

When the desired amount is reached, press the "2 cup" button again and the coffee will stop dispensing.

You have now programmed the coffee maker to the size of a double cup as per your preferences, and this will be saved for future use.

NOTE: The adjustable dispensing amount for a single cup ranges between 30ml/1oz and 70ml/2.37oz.

To reset the default volumes

Simultaneously press and hold the “1 cup” and “2 cup” buttons for 3 seconds to restore to default dispensing amounts.

NOTE: The adjustable dispensing amount for a double cup ranges between 80ml/2.7oz and 120ml/4oz.

AUTO SHUT-OFF FUNCTION

If no operation is selected after 29 minutes of being powered on, the unit will power down automatically.

If no operation is selected after 215ml/7.27 oz of water is pumped out, the pump will stop automatically.

If no operation is selected after 180 seconds of frothing milk, the pump will stop automatically.

CLEANING AND MAINTENANCE

Cleaning the appliance

Turn the knob to OFF and allow the coffee maker to cool down completely before cleaning.

Regularly clean the casing of the coffee maker with a damp sponge, then clean the water tank, drip tray and drip plate and dry them.

NOTE: **Do not** clean with alcohol or solvent cleanser. Never immerse the housing in water to clean.

Clean portafilter with cleanser or warm water.

Clean all the attachments and dry thoroughly.

Cleaning the portafilter and the filters

The filters should be kept clean to guarantee perfect results.

⚠ WARNING To avoid burns, the filter must only be removed when the portafilter has cooled down completely.

01. Remove the filter from the portafilter and wash it with warm water.

02. If you notice a malfunction when brewing coffee, immerse the filter in boiling water for 10 minutes and then rinse with running water.

NOTE: **Do not** clean any of the parts in the dishwasher.

Cleaning the Steam Wand

01. Immediately after frothing milk, turn steam on to purge out any residual milk from the steam wand.

02. Clean the steam wand with a damp cloth. To clean it more thoroughly, you can unscrew the steam tube and wash it with running water.

03. If the hole of the steam wand becomes blocked with milk residue, insert the cleaning needle into the hole of the steam wand and remove. Then run hot water through the steam wand for 4-6 seconds.

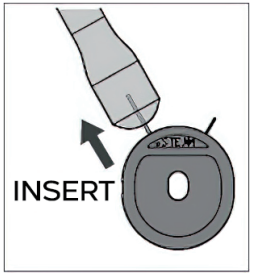

04. If the hole of the steam wand remains blocked. Unscrew the steam nozzle and put it into a cup of warm water with one espresso machine cleaning tablet. Rinse the steam nozzle under running water, then insert the cleaning needle into the hole and remove. Run hot water through the steam wand for 4-6 seconds.

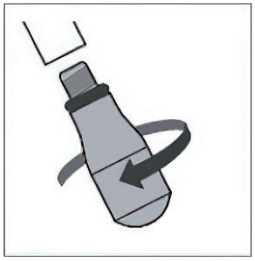

Cleaning the Brew Head

Regularly remove any residual coffee grounds from the brew head using a brush, and wash with hot water following the steps below.

01. Do not insert the portafilter.

02. Place an empty cup under the brew head.

03. Press either the "1 CUP" or "2 CUP" button. The brewing will begin shortly.

04. The appliance will stop automatically once the brewing process is finished.

⚠ WARNING **Do not** try to disassemble the brew head. It will damage the brew head and lead to leakage.

DESCALING THE APPLIANCE

To make sure your coffee maker operates efficiently, to clean the internal pipes, and to preserve the flavor of your coffee, the coffee machine needs to be descaled, cleaned and maintained periodically. After 500 brew cycles, a descaling warning will be shown. All indicator lights will flash 5 times to indicate it is time to descale the machine. The descaling warning will appear every time at start-up if you do not cancel it.

01. Fill the water tank with water and a descaling agent (4 parts water to 1 part descaling agent) to the MAX level.

Please also refer to the instructions on the descaling agent. Please use a household descaling agent, or you can use citric acid instead of a commercial descaling agent. In this case use 100 parts of water to three parts of citric acid.

02. Place a cup/mug or other suitable receptacle on the drip tray and press the "2 cup" button once to start the brewing cycle. Allow the machine to drip about 100ml/3.4 oz of water into the cup. Then turn off the appliance and leave the descaling solution in the appliance for 5 minutes.

03. Turn on the appliance again and repeat the previous step three more times.

04. Next, repeat the process two more times using only CLEAN TAP WATER without any descaling agent.

05. After you have finished the descaling, you need to cancel the descaling warning: simultaneously press and hold the "1 cup" button, "2 cup" button and "Steam" button for 3 seconds.

TROUBLESHOOTING

PROBLEM	POSSIBLE CAUSE	SOLUTION
Machine doesn't work, or couldn't turn on.	Machine is not switched on or power plug is not plugged in.	Make sure that the power plug is plugged in, that the ON/OFF button has been pressed and that both coffee buttons light up blue.
	Short circuit / power outlet is without power.	Check the power supply, and contact our customer support.
	The machine is faulty.	Contact our customer support.
Machine doesn't work, and all buttons are flashing at the same time.	The flowmeter or NTC inside the machine is broken.	Contact our customer support.
Machine doesn't brew coffee, only 1 cup and 2 cup buttons are alternate flashing.	Machine is under over-pressure protection, and the temperature of boiler is too high.	Use hot water function to cool down the boiler first.
Coffee does not or only slowly run out of the filter holder.	Water tank is empty.	Fill water tank.
	The water tank is not installed correctly.	Remove the water tank and correctly install it.
	The machine cannot pump the water.	Use hot water function to pump the water.
	Coffee is ground too finely.	Ensure appropriate degree of grinding.
	Too much coffee in filter.	Ensure appropriate amount.
	Ground coffee is tamped too strongly.	Tamp ground coffee less strongly.
	Filter is clogged up.	Clean the filters hole with a pin.
	The steam button is turn on(after using the hot water function and without turn off).	Turn the steam button off.
	The machine is faulty.	Contact our customer support.
Coffee runs through too quickly.	Coffee is ground too coarsely.	Ensure appropriate degree of grinding.
	Too little coffee in filter.	Ensure appropriate amount.
	Ground coffee is not tamped strong enough.	Tamp ground coffee more strongly.
Coffee is cold.	Machine is not pre-warmed.	Let hot water run through the appliance with the inserted portafilter (with filter but without coffee grounds) before extracting the first coffee to warm up the brew system.
	Cups not pre-warmed.	Pre-warm cups with warm water.

Water is pooled under the coffee machine.	The water tank is not installed correctly.	Remove the water tank and correctly install it.
	The drip tray is filled with water.	Empty and clean drip tray.
	The machine is faulty.	Contact our customer support.
The steam fails to steam the milk.	The milk jug is too big or the jug shape is unsuitable.	Always use a tall, slim container ideally made from stainless steel.
	You have used milk with less than 3.3% of milk protein.	Use milk with more than 3.3% of milk protein.
	The milk is not cold.	Always use cold milk(41 ℉).
Not producing steam.	Water tank is empty.	Fill the water tank.
	Steam nozzle is clogged.	Remove the steam nozzle from steam wand and clean the steam nozzle with a pin.
	Steam function was used for more than 3 minutes.	Turn steam knob off for at least 1 minute.
	The machine is faulty.	Contact our customer support.
Hot water function is not working.	Water tank is empty.	Fill the water tank.
	Steam nozzle is clogged.	Remove the steam nozzle from steam wand and clean the steam nozzle with a pin.
	Hot water function was used for more than 40 seconds.	Turn steam knob off for at least 1 minute.
	The machine is faulty.	Contact our customer support.
Coffee is dripping out of the rim of the filter holder.	Too much coffee in the filter.	Make sure to use the correct amount of coffee.
	Coffee ground is sticking to the sealing ring of the brewing head.	Turn off the machine, wait until it has cooled down and then clean the filter, the filter holder and the brew head with its sealing ring
	Filter holder is not completely closed.	Insert the filter holder and turn the handle to the right until you feel some resistance.
	Maker espresso after frothing milk or using the steam function immediately.	Use hot water function to cool down the boiler first.
	The machine is faulty.	Contact our customer support.

NOTE: **If your problem is not listed**, please contact Customer Support.

WARRANTY INFORMATION

The manufacturer provides warranty in accordance with the legislation of the customer's own country of residence, with a minimum of 12 months, starting from the date on which the appliance is sold to the end user.

The warranty only covers defects in material or workmanship.

The warranty will not apply in cases of:

- Normal wear and tear.
- Incorrect use, e.g. overloading of the appliance, use of non-approved accessories.
- Use of force, damage caused by external influences.
- Damage caused by non-observance of the user manual, e.g. connection to an unsuitable mains supply or non-compliance with the installation instructions.
- Partially or completely dismantled appliances.

B

CASABREWS BRANDS INC.
1360 S Valley Vista Dr. , Suite 108
Diamond Bar, California 91765
United States of America

CASABREWS

Rev 1.1