0.96inch OLED (A)

Introduction

0.96inch OLED, SPI/I2C interfaces, curved/horizontal pinheader

0.96inch OLED (A)

0.96inch OLED, SPI/I2C interfaces, curved/horizontal pinheader

Specification

- Operating Voltage: 3.3V/5V
- Communication Interface: 3-wire SPI, 4-wire SPI, I2C
- Screen Type: OLED
- Driver Chip: SSD1306
- Resolution: 128*64(Pixel)
- Display Size: 0.96inch
- Display Color: 1/4 yellow section, 3/4 blue section
- Operating Temp. (°C): -20°C ~ 70°C
- Storage Temp. (°C): -30°C ~ 80°C
- Visible Angle: >160°

Pinout

PIN	Description
VCC	3.3V/5V Power input
GND	Ground
NC	NC
DIN	SPI Data input
CLK	SPI Clock input
CS	Chip select, active low
D/C	Command signal, low level for command, high level for data
RES	Reset signal, active low

Hardware Configuration

The OLED module provides three drive interfaces: 3-wire SPI, 4-wire SPI and I2C interface respectively. There are two resistors that can be soldered on the back of the module, and the corresponding communication method can be selected through the selection of resistors, as shown in the figure:

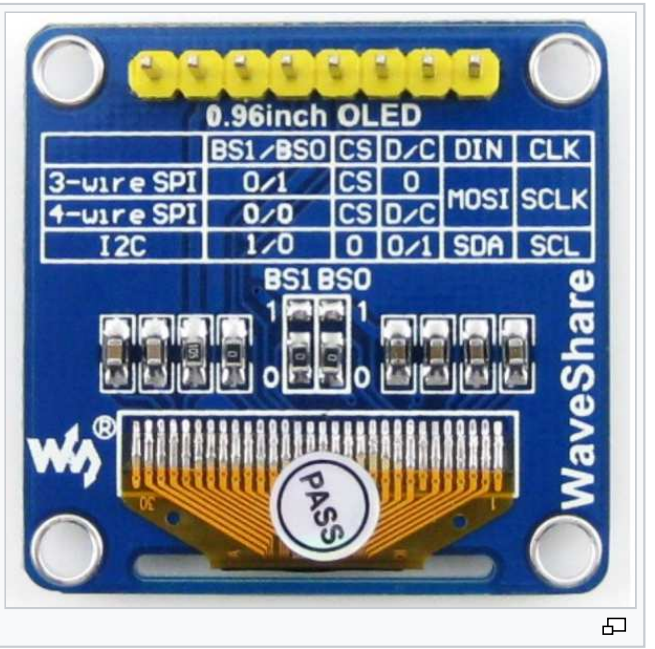

The module uses the 4-wire SPI communication mode by default, that is, BS0 and BS1 are connected to 0 by default (1 and 0 do not represent the level, but the resistance is connected or connected to the welding method, the specific hardware connection is shown in the table below):

Note: The above picture is the welding on the hardware, the following table is the actual hardware connection

Communication Mode	BS1/BS0
3-wire SPI	0/1
4-wire SPI	0/0
I2C	1/0

The specific hardware configuration is as follows:

- Using 4-wire SPI:

That is, the factory program settings: BS0 and BS1 are connected to 0 and to the ground, DIN is connected to 0 and to Raspberry Pi MOSI, and CLK is connected to 0 and to Raspberry Pi SCLK;

- Using 3-wire SPI:

Connect BS0 to 1 and to VCC, connect BS1 to 0 and to GND, connect DIN to 0 and to Raspberry Pi MOSI, connect CLK to 0 and to Raspberry Pi SCLK;

- Using I2C:

BS0 connects to 0 and to GND, BS1 connects to 1 and to VCC (3.3V), DIN connects to 0 and to Raspberry Pi SDA, CLK connects to 1 and to Raspberry Pi SCL;

When using I2C: The high and low state of DC can control the address of the slave device. If it is connected to GND, then the 7-bit address of I2C is: 0x3C;

PS: The program defaults to SPI mode. If you need to switch the mode, please modify

DEV_Config.h. For details, please refer to the program description - bottom hardware interface - interface selection

PS: When using STM32, the I2C routine uses analog I2C, please pay attention to the connection

User Guides for RPI

We provide BCM2835, WiringPi, file IO, RPI (Python) library demos

Hardware Connection

When connecting the Raspberry Pi, choose to use the 7PIN cable to connect, please refer to the pin correspondence table below.

Raspberry Pi connection pin correspondence

OLED	Raspberry Pi	
	BCM2835 encoding	Board physical pin number
VCC	3.3V	3.3V
GND	GND	GND
DIN	SPI:D10(MOSI) / I2C:D2	SPI:MOSI / I2C:SDA.1
CLK	SPI:D11(SCLK) / I2C:D3	SPI:SCLK / I2C:SCL.1
CS	D8(CE0)	CE0
D/C	D25	GPIO.6
RES	D27	GPIO.2

- Four-wire SPI wiring diagram

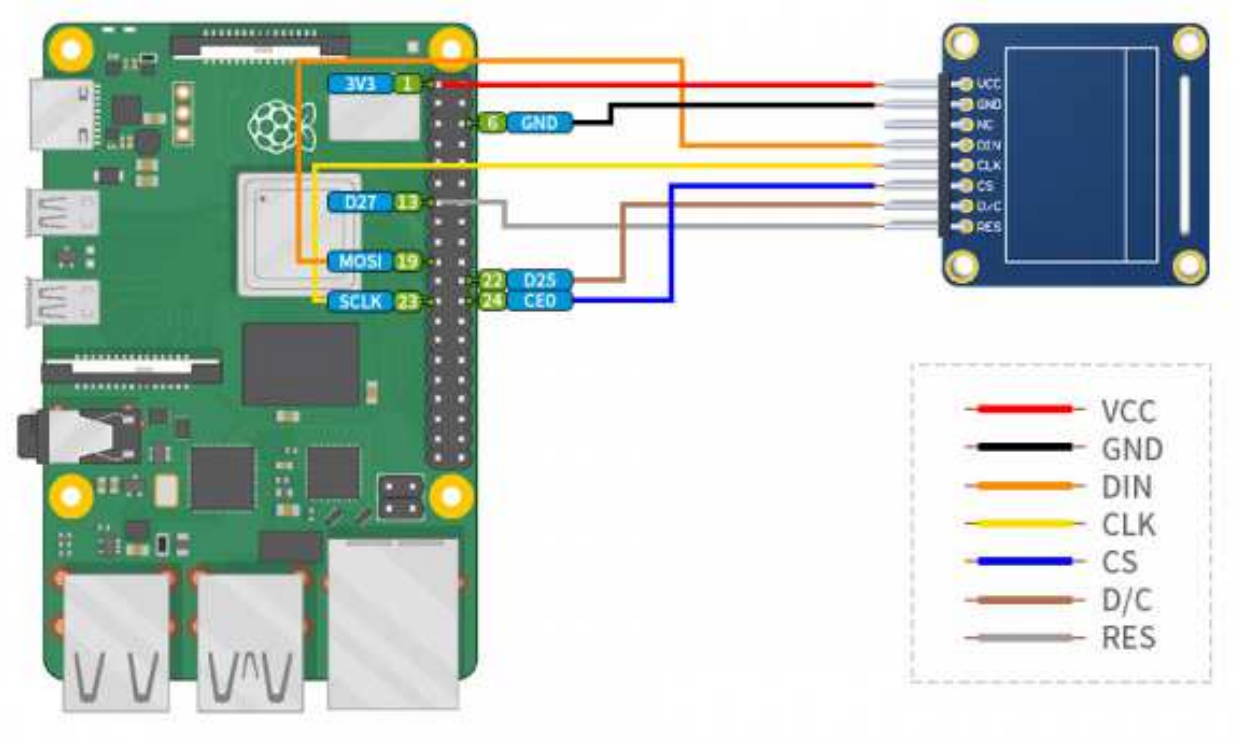

Enable SPI and I2C Interface

- Enable RPi terminal, use the following commands to enter Configuration interface

```
sudo raspi-config
Select Interfacing Option
s -> SPI -> Yes Enable SP
I interface
```

Then reboot the RPi

```
sudo reboot
```

Use the above commands to enable I2C, choose Interfaceing Options -> I2C -> Yes and then reboot

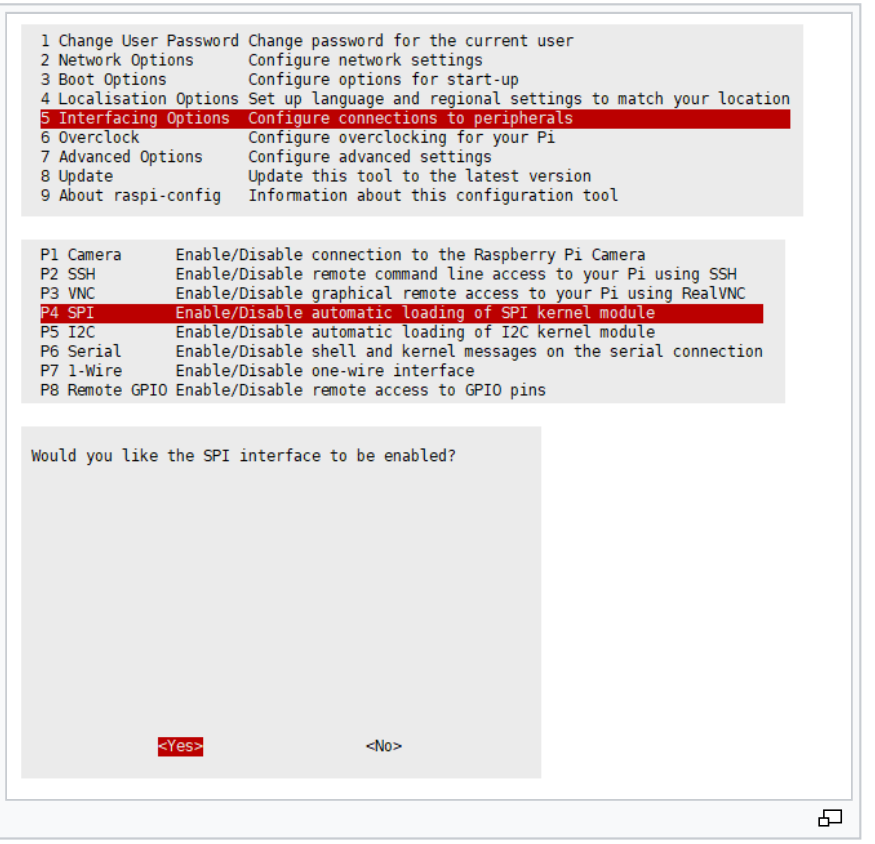

Install Libraries

BCM2835

```
#Open the Raspberry Pi terminal and run the following command
wget http://www.airspayce.com/mikem/bcm2835/bcm2835-1.68.tar.gz
tar zxvf bcm2835-1.71.tar.gz
cd bcm2835-1.71/
sudo ./configure && sudo make && sudo make check && sudo make install
# For more information, please refer to the official website: http://www.a
irspayce.com/mikem/bcm2835/
```

wiringPi

```
#Open the Raspberry Pi terminal and run the following command
sudo apt-get install wiringpi
#For Raspberry Pi systems after May 2019 (earlier than before, you may not
need to execute), you may need to upgrade:
wget https://project-downloads.drogon.net/wiringpi-latest.deb
sudo dpkg -i wiringpi-latest.deb
gpio -v
```

```
# Run gpio -v and version 2.52 will appear. If it does not appear, the ins
tallation is wrong

#Bullseye branch system use the following command:
git clone https://github.com/WiringPi/WiringPi
cd WiringPi
./build
gpio -v
# Run gpio -v and version 2.60 will appear. If it does not appear, it mean
s that there is an installation error
```

Python

```
#python2
sudo apt-get update
sudo apt-get install python-pip
sudo apt-get install python-pil
sudo apt-get install python-numpy
sudo pip install RPi.GPIO
sudo pip install spidev
#python3
sudo apt-get update
sudo apt-get install python3-pip
sudo apt-get install python3-pil
sudo apt-get install python3-numpy
sudo pip3 install RPi.GPIO
sudo pip3 install spidev
```

Download Examples

Open RPI terminal and execute:

```
sudo apt-get install p7zip-full
sudo wget  https://www.waveshare.net/w/upload/2/2c/OLED_Module_Code.7z
7z x OLED_Module_Code.7z -O./OLED_Module_Code
cd OLED_Module_Code/RaspberryPi
```

Run the Demo Codes

Please execute the following commands in the RaspberryPi directory, or the directory will not be indexed

C

- Re-compile the demo codes

```
cd c
sudo make clean
sudo make -j 8
```

The test program of all screens can be called directly by entering the corresponding size:

```
sudo ./main screen size
```

The command of each LCD model can check in the following table:

```
#0.91inch OLED Module
sudo ./main 0.91
#0.95inch RGB OLED (A)/(B)
sudo ./main 0.95rgb
#0.96inch OLED (A)/(B)
sudo ./main 0.96
#1.3inch OLED (A)/(B)
sudo ./main 1.3
#1.3inch OLED Module (C)
sudo ./main 1.3c
#1.5inch OLED Module
sudo ./main 1.5
#1.5inch RGB OLED Module
sudo ./main 1.5rgb
```

Python

- Enter the python directory and run

```
cd python/example
```

- **Run the demo of the corresponding model OLED**, the program supports python2/3

If you have purchased a 1.3inch OLED Module (C), please enter:

```
# python2
sudo python OLED_1in3_c_test.py
# python3
sudo python3 OLED_1in3_c_test.py
```

If you have purchased a 1.5inch RGB OLED Module, please enter:

```
# python2
sudo python OLED_1in5_rgb_test.py
# python3
sudo python3 OLED_1in5_rgb_test.py
```

The command of each LCD model can check in the following table:

```
#0.91inch OLED Module
sudo python OLED_0in91_test.py
#0.95inch RGB OLED (A)/(B)
sudo python OLED_0in95_rgb_test.py
#0.96inch OLED (A)/(B)
sudo python OLED_0in96_test.py
#1.3inch OLED (A)/(B)
sudo python OLED_1in3_c_test.py
#1.3inch OLED Module (C)
sudo python OLED_1in3_test.py
#1.5inch OLED Module
sudo python OLED_1in5_test.py
#1.5inch RGB OLED Module
sudo python OLED_1in5_rgb_test.py
```

- Please make sure that the SPI is not occupied by other devices, you can check in the middle of /boot/config.txt

C Codes

Hardware Interface

C language uses 3 ways to drive: BCM2835 library, WiringPi library, and Dev library

By default, the Dev library is used for operation. If you need to use BCM2835 or WiringPi to drive, you can open RaspberryPi\c\Makefile and modify lines 13-15, as follows:

```
13  #USELIB = USE_BCM2835_LIB
14  #USELIB = USE_WIRINGPI_LIB
15  USELIB = USE_DEV_LIB
16  DEBUG = -D $(USELIB)
17  ifeq ($(USELIB), USE_BCM2835_LIB)
18      LIB = -lbcm2835 -lm
19  else ifeq ($(USELIB), USE_WIRINGPI_LIB)
20      LIB = -lwiringPi -lm
21  else ifeq ($(USELIB), USE_DEV_LIB)
22      LIB = -lpthread -lm
```

```
endif
```

We have carried out the underlying encapsulation. Because the hardware platform is different, the internal implementation is different. If you need to know the internal implementation, you can go to the corresponding directory to view

You can see many definitions in DEV_Config.c(.h), in the directory: RaspberryPi\c\lib\Config

- Interface selection:

```
#define USE_SPI_4W  1
#define USE_IIC     0
Note:Modified here directly to switch SPI/I2C.
```

- Data type

```
#define UBYTE      uint8_t
#define UWORD      uint16_t
#define UDOUBLE    uint32_t
```

- Module initialization and exit processing.

```
void DEV_Module_Init(void);
void DEV_Module_Exit(void);
Note:
  Here is some GPIO processing before and after using the LCD screen.
```

- Write GPIO.

```
void DEV_Digital_Write(UWORD Pin, UBYTE Value)
Parameter:
     UWORD Pin: GPIO Pin number
     UBYTE Value: level to be output, 0 or 1
```

- Read GPIO.

```
UBYTE DEV_Digital_Read(UWORD Pin)
Parameter：
     UWORD Pin：GPIO Pin number
     Return value: level of GPIO, 0 or 1
```

- GPIO mode setting .

```
void DEV_GPIO_Mode(UWORD Pin, UWORD Mode)
Parameters:
     UWORD Pin: GPIO Pin number
     UWORD Mode: Mode, 0: input, 1: output
```

GUI Analysis

If you need to draw pictures, display Chinese and English characters, display pictures, etc., we provide some basic functions here about some graphics processing in the directory RaspberryPi\c\lib\GUI\GUI_Paint.c(.h).

名称	修改日期	类型	大小
GUI_BMP.c	2020/6/8 14:59	C 文件	5 KB
GUI_BMP.h	2020/6/5 10:58	H 文件	3 KB
GUI_Paint.c	2020/6/16 17:18	C 文件	31 KB
GUI_Paint.h	2020/6/16 17:23	H 文件	6 KB

In the directory: RaspberryPi\c\lib\Fonts are GUI-dependent character fonts,

名称	修改日期	类型	大小
font8.c	2020/5/20 11:58	C 文件	18 KB
font12.c	2020/5/20 11:58	C 文件	27 KB
font12CN.c	2020/6/5 18:57	C 文件	6 KB
font16.c	2020/5/20 11:58	C 文件	49 KB
font20.c	2020/5/20 11:58	C 文件	65 KB
font24.c	2020/5/20 11:58	C 文件	97 KB
font24CN.c	2020/6/5 19:01	C 文件	28 KB
fonts.h	2020/5/20 11:58	H 文件	4 KB

- New Image Properties: Create a new image buffer, this property includes the image buffer name, width, height, flip Angle, color.

```
void Paint_NewImage(UBYTE *image, UWORD Width, UWORD Height, UWORD Rotate,
UWORD Color)
Parameters:
      Image: the name of the image buffer, which is actually a pointer to
the first address of the image buffer;
      Width: image buffer Width;
      Height: the Height of the image buffer;
      Rotate: Indicates the rotation Angle of an image
      Color: the initial Color of the image;
```

- Select image buffer: The purpose of the selection is that you can create multiple image attributes, there can be multiple images buffer, you can select each image you create.

```
void Paint_SelectImage(UBYTE *image)
Parameters:
       Image: the name of the image buffer, which is actually a pointer to
the first address of the image buffer;
```

- Image Rotation: Set the rotation Angle of the selected image, preferably after Paint_SelectImage(), you can choose to rotate 0, 90, 180, 270.

```
void Paint_SetRotate(UWORD Rotate)
Parameters:
        Rotate: ROTATE_0, ROTATE_90, ROTATE_180, and ROTATE_270 correspond
to 0, 90, 180, and 270 degrees.
```

- Sets the size of the pixels.

```
void Paint_SetScale(UBYTE scale)
Parameters:
        scale: the size of pixels, 2: each pixel occupies one bit; 4: Each
pixel occupies two bits.
```

- Image mirror flip: Set the mirror flip of the selected image. You can choose no mirror, horizontal mirror, vertical mirror, or image center mirror.

```
void Paint_SetMirroring(UBYTE mirror)
Parameters:
        Mirror: indicates the image mirroring mode. MIRROR_NONE, MIRROR_HO
RIZONTAL, MIRROR_VERTICAL, MIRROR_ORIGIN correspond to no mirror, horizont
al mirror, vertical mirror, and image center mirror respectively.
```

- Set points of the display position and color in the buffer: here is the core GUI function, processing points display position and color in the buffer.

```
void Paint_SetPixel(UWORD Xpoint, UWORD Ypoint, UWORD Color)
Parameters:
        Xpoint: the X position of a point in the image buffer
        Ypoint: Y position of a point in the image buffer
        Color: indicates the Color of the dot
```

- Image buffer fill color: Fills the image buffer with a color, usually used to flash the screen into blank.

```
void Paint_Clear(UWORD Color)
Parameters:
```

```
        Color: fill Color
```

- The fill color of a certain window in the image buffer: the image buffer part of the window filled with a certain color, usually used to fresh the screen into blank, often used for time display, fresh the last second of the screen.

```
void Paint_ClearWindows(UWORD Xstart, UWORD Ystart, UWORD Xend, UWORD Yen
d, UWORD Color)
Parameters:
        Xstart: the x-starting coordinate of the window
        Ystart: the y-starting coordinate of the window
        Xend: the x-end coordinate of the window
        Yend: the y-end coordinate of the window
        Color: fill Color
```

- Draw point: In the image buffer, draw points on (Xpoint, Ypoint), you can choose the color, the size of the point, the style of the point.

```
void Paint_DrawPoint(UWORD Xpoint, UWORD Ypoint, UWORD Color, DOT_PIXEL Do
t_Pixel, DOT_STYLE Dot_Style)
Parameters:
        Xpoint: indicates the X coordinate of a point.
        Ypoint: indicates the Y coordinate of a point.
        Color: fill Color
        Dot_Pixel: The size of the dot, the demo provides 8 size pointss b
y default.
              typedef enum {
                 DOT_PIXEL_1X1  ,               // 1 x 1
                 DOT_PIXEL_2X2  ,               // 2 X 2
                 DOT_PIXEL_3X3  ,               // 3 X 3
                 DOT_PIXEL_4X4  ,               // 4 X 4
                 DOT_PIXEL_5X5  ,               // 5 X 5
                 DOT_PIXEL_6X6  ,               // 6 X 6
                 DOT_PIXEL_7X7  ,               // 7 X 7
                 DOT_PIXEL_8X8  ,               // 8 X 8
                } DOT_PIXEL;
        Dot_Style: the size of a point that expands from the center of the
point or from the bottom left corner of the point to the right and up.
                 typedef enum {
                     DOT_FILL_AROUND  = 1,
                     DOT_FILL_RIGHTUP,
                  } DOT_STYLE;
```

- Draw line: In the image buffer, draw line from (Xstart, Ystart) to (Xend, Yend), you can choose the color, the width and the style of the line.

```
void Paint_DrawLine(UWORD Xstart, UWORD Ystart, UWORD Xend, UWORD Yend, UW
ORD Color, LINE_STYLE Line_Style ,  LINE_STYLE Line_Style)
Parameters:
        Xstart: the x-starting coordinate of a line
        Ystart: the y-starting coordinate of the a line
        Xend: the x-end coordinate of a line
        Yend: the y-end coordinate of a line
        Color: fill Color
        Line_width: The width of the line, the demo provides 8 sizes of wi
dth by default.
              typedef enum {
                 DOT_PIXEL_1X1  ,               // 1 x 1
                 DOT_PIXEL_2X2  ,               // 2 X 2
                 DOT_PIXEL_3X3  ,               // 3 X 3
                 DOT_PIXEL_4X4  ,               // 4 X 4
                 DOT_PIXEL_5X5  ,               // 5 X 5
                 DOT_PIXEL_6X6  ,               // 6 X 6
                 DOT_PIXEL_7X7  ,               // 7 X 7
                 DOT_PIXEL_8X8  ,               // 8 X 8
              } DOT_PIXEL;
        Line_Style: line style. Select whether the lines are joined in a s
traight or dashed way.
              typedef enum {
                 LINE_STYLE_SOLID = 0,
                 LINE_STYLE_DOTTED,
              } LINE_STYLE;
```

- Draw rectangle: In the image buffer, draw a rectangle from (Xstart, Ystart) to (Xend, Yend), you can choose the color, the width of the line, whether to fill the inside of the rectangle.

```
void Paint_DrawRectangle(UWORD Xstart, UWORD Ystart, UWORD Xend, UWORD Yen
d, UWORD Color, DOT_PIXEL Line_width,  DRAW_FILL Draw_Fill)
Parameters:
        Xstart: the starting X coordinate of the rectangle
        Ystart: the starting Y coordinate of the rectangle
        Xend: the x-end coordinate of the rectangle
        Yend: the y-end coordinate of the rectangle
        Color: fill Color
        Line_width: The width of the four sides of a rectangle. And the de
mo provides 8 sizes of width by default.
                typedef enum {
                        DOT_PIXEL_1X1  ,                // 1 x 1
                        DOT_PIXEL_2X2  ,                // 2 X 2
                        DOT_PIXEL_3X3  ,                // 3 X 3
                        DOT_PIXEL_4X4  ,                // 4 X 4
```

```
                        DOT_PIXEL_5X5  ,                // 5 X 5
                        DOT_PIXEL_6X6  ,                // 6 X 6
                        DOT_PIXEL_7X7  ,                // 7 X 7
                        DOT_PIXEL_8X8  ,                // 8 X 8
                  } DOT_PIXEL;
          Draw_Fill: Fill, whether to fill the inside of the rectangle
               typedef enum {
                        DRAW_FILL_EMPTY = 0,
                        DRAW_FILL_FULL,
               } DRAW_FILL;
```

- Draw circle: In the image buffer, draw a circle of Radius with (X_Center Y_Center) as the center. You can choose the color, the width of the line, and whether to fill the inside of the circle.

```
void Paint_DrawCircle(UWORD X_Center, UWORD Y_Center, UWORD Radius, UWORD
Color, DOT_PIXEL Line_width,  DRAW_FILL Draw_Fill)
Parameters:
        X_Center: the x-coordinate of the center of the circle
        Y_Center: the y-coordinate of the center of the circle
        Radius: indicates the Radius of a circle
        Color: fill Color
        Line_width: The width of the arc, with a default of 8 widths
                typedef enum {
                        DOT_PIXEL_1X1  ,                // 1 x 1
                        DOT_PIXEL_2X2  ,                // 2 X 2
                        DOT_PIXEL_3X3  ,                // 3 X 3
                        DOT_PIXEL_4X4  ,                // 4 X 4
                        DOT_PIXEL_5X5  ,                // 5 X 5
                        DOT_PIXEL_6X6  ,                // 6 X 6
                        DOT_PIXEL_7X7  ,                // 7 X 7
                        DOT_PIXEL_8X8  ,                // 8 X 8
                } DOT_PIXEL;
        Draw_Fill: fill, whether to fill the inside of the circle
              typedef enum {
                        DRAW_FILL_EMPTY = 0,
                        DRAW_FILL_FULL,
              } DRAW_FILL;
```

- Write Ascii character: In the image buffer, use (Xstart Ystart) as the left vertex, write an Ascii character, you can select Ascii visual character library, font foreground color, font background color.

```
void Paint_DrawChar(UWORD Xstart, UWORD Ystart, const char Ascii_Char, sFO
NT* Font, UWORD Color_Foreground,  UWORD Color_Background)
Parameters:
```

```
        Xstart: the x-coordinate of the left vertex of a character
        Ystart: the Y-coordinate of the left vertex of a character
        Ascii_Char: indicates the Ascii character
        Font: Ascii visual character library, in the Fonts folder the demo
provides the following Fonts:
                Font8: 5*8 font
                Font12: 7*12 font
                Font16: 11*16 font
                Font20: 14*20 font
                Font24: 17*24 font
        Color_Foreground: Font color
        Color_Background: indicates the background color
```

- Write English string: In the image buffer, use (Xstart Ystart) as the left vertex, write a string of English characters, you can choose Ascii visual character library, font foreground color, font background color.

```
void Paint_DrawString_EN(UWORD Xstart, UWORD Ystart, const char * pString,
sFONT* Font, UWORD Color_Foreground,  UWORD Color_Background)
Parameters:
        Xstart: the x-coordinate of the left vertex of a character
        Ystart: the Y coordinate of the font's left vertex
        PString: string, string is a pointer
        Font: Ascii visual character library, in the Fonts folder the demo
provides the following Fonts:
                Font8: 5*8 font
                Font12: 7*12 font
                Font16: 11*16 font
                Font20: 14*20 font
                Font24: 17*24 font
        Color_Foreground: Font color
        Color_Background: indicates the background color
```

- Write Chinese string: in the image buffer, use (Xstart Ystart) as the left vertex, write a string of Chinese characters, you can choose character font, font foreground color, font background color of the GB2312 encoding

```
void Paint_DrawString_CN(UWORD Xstart, UWORD Ystart, const char * pString,
cFONT* font, UWORD Color_Foreground,  UWORD Color_Background)
Parameters:
        Xstart: the x-coordinate of the left vertex of a character
        Ystart: the Y coordinate of the font's left vertex
        PString: string, string is a pointer
        Font: GB2312 encoding character Font library, in the Fonts folder
the demo provides the following Fonts:
                Font12CN: ASCII font 11*21, Chinese font 16*21
```

```
                Font24CN: ASCII font24 *41, Chinese font 32*41
        Color_Foreground: Font color
        Color_Background: indicates the background color
```

- Write numbers: In the image buffer,use (Xstart Ystart) as the left vertex, write a string of numbers, you can choose Ascii visual character library, font foreground color, font background color.

```
void Paint_DrawNum(UWORD Xpoint, UWORD Ypoint, double Nummber, sFONT* Fon
t, UWORD Digit, UWORD Color_Foreground,   UWORD Color_Background)
Parameters:
        Xpoint: the x-coordinate of the left vertex of a character
        Ypoint: the Y coordinate of the left vertex of the font
        Nummber: indicates the number displayed, which can be a decimal
        Digit: It's a decimal number
        Font: Ascii visual character library, in the Fonts folder the demo
provides the following Fonts:
                Font8: 5*8 font
                Font12: 7*12 font
                Font16: 11*16 font
                Font20: 14*20 font
                Font24: 17*24 font
        Color_Foreground: Font color
        Color_Background: indicates the background color
```

- Display time: in the image buffer,use (Xstart Ystart) as the left vertex, display time,you can choose Ascii visual character font, font foreground color, font background color.;

```
void Paint_DrawTime(UWORD Xstart, UWORD Ystart, PAINT_TIME *pTime, sFONT*
Font, UWORD Color_Background,  UWORD Color_Foreground)
Parameters:
        Xstart: the x-coordinate of the left vertex of a character
        Ystart: the Y coordinate of the font's left vertex
        PTime: display time, A time structure is defined here, as long as
the hours, minutes and seconds are passed to the parameters;
        Font: Ascii visual character library, in the Fonts folder the demo
provides the following Fonts:
                Font8: 5*8 font
                Font12: 7*12 font
                Font16: 11*16 font
                Font20: 14*20 font
                Font24: 17*24 font
        Color_Foreground: Font color
        Color_Background: indicates the background color
```

Python(for Raspberry Pi)

It is compatible with python2.7 and python3.

The calls of the python are less complex compared to C demo.

config.py

- Select interface.

```
Device_SPI = 1
Device_I2C = 0
Note: Switch SPI/I2C modified here
```

- Module initialization and exit processing.

```
def module_init()
def module_exit()
Note:
1. Here is some GPIO processing before and after using the LCD screen.
2. The module_init() function is automatically called in the INIT () initi
alizer on the LCD, but the module_exit() function needs to be called by it
self
```

- SPI write data.

```
def spi_writebyte(data)
```

- IIC write data.

```
i2c_writebyte(reg, value):
```

main.py

The main function, if your Python version is Python2, is re-executed in Linux command mode as follows.

```
sudo python main.py
```

If your Python version is Python3, run the following command in Linux.

```
sudo python3 main.py
```

GUI Functions

Python has an image library PIL official library link, it do not need to write code from the logical layer like C, can directly call to the image library for image processing. The following will take 1.54inch LCD as an example, we provide a brief description for the demo.

- It needs to use the image library and install the library.

```
sudo apt-get install python3-pil
```

And then import the library

```
from PIL import Image,ImageDraw,ImageFont.
```

Among them, Image is the basic library, ImageDraw is the drawing function, and ImageFont is the text function.

- Define an image buffer

```
image1 = Image.new("1", (disp.width, disp.height), "WHITE")
```

The first parameter defines the color depth of the image, which is defined as "1" to indicate the bitmap of one-bit depth. The second parameter is a tuple that defines the width and height of the image. The third parameter defines the default color of the buffer, which is defined as "WHITE".

- Create a drawing object based on Image1 on which all drawing operations will be performed on here.

```
draw = ImageDraw.Draw(image1)
```

- Draw line.

```
draw.line([(0,0),(127,0)], fill = 0)
```

The first parameter is a four-element tuple starting at (0, 0) and ending at (127,0). Draw a line. Fill ="0" means the color of the line is white.

- Draw rectangle.

```
draw.rectangle([(20,10),(70,60)],fill = "WHITE",outline="BLACK")
```

The first argument is a tuple of four elements. (20,10) is the coordinate value in the upper left corner of the rectangle, and (70,60) is the coordinate value in the lower right corner of the rectangle. Fill =" WHITE" means BLACK inside, and outline="BLACK" means the color of the outline is black.

- Draw circle.

```
draw.arc((150,15,190,55),0, 360, fill =(0,255,0)
```

Draw an inscribed circle in the square, the first parameter is a tuple of 4 elements, with (150, 15) as the upper left corner vertex of the square, (190, 55) as the lower right corner vertex of the square, specifying the level median line of the rectangular frame is the angle of 0 degrees, the second parameter indicates the starting angle, the third parameter indicates the ending angle, and fill = 0 indicates that the the color of the line is white. If the figure is not square according to the coordination, you will get an ellipse.

Besides the arc function, you can also use the chord function for drawing solid circle.

```
draw.ellipse((150,65,190,105), fill = 0)
```

The first parameter is the coordination of the enclosing rectangle. The second and third parameters are the beginning and end degrees of the circle. The fourth parameter is the fill color of the circle.

- Character.

The ImageFont module needs to be imported and instantiated:

```
Font1 = ImageFont.truetype("../Font/Font01.ttf",25)
Font2 = ImageFont.truetype("../Font/Font01.ttf",35)
Font3 = ImageFont.truetype("../Font/Font02.ttf",32)
```

You can use the fonts of Windows or other fonts which is in ttc format..
Note: Each character library contains different characters; If some characters cannot be displayed, it is recommended that you can refer to the encoding set ro used. To draw English character, you can directly use the fonts; for Chinese character, you need to add a symbol u:

```
draw.text((5, 68), 'Hello world', fill = 0, font=Font1)
text= u"微雪电子"
draw.text((5, 200), text, fill = 0, font=Font3)
```

The first parameter is a two-element tuple with (5,68) as the left vertex, and use font1, fill is font color, fill = 0 means that the font color is white, and the second sentence shows'微雪电子', font color is white.

- Read local picture.

```
image = Image.open('../pic/pic.bmp')
```

The parameter is the image path.

- Other functions.

For more information, you can search online.

User Guides for STM32

Provides demos based on STM32F103RBT6

Hardware Coonnection

The examples are based on STM32F103RBT6 as well as the connection table. If you want to use other MCU, you need to port the project and change the connection according to the actual hardware.

Connect to STM32F103RBT6

OLED	STM32
VCC	3.3V
GND	GND
DIN	SPI:PA7/I2C:PB9 / I2C_SOFT : PC8
SCL	SPI:PA5/I2C:PB8 / I2C_SOFT : PC6
CS	PB6
D/C	PA8
RES	PA9

- Four-wire SPI wiring diagram

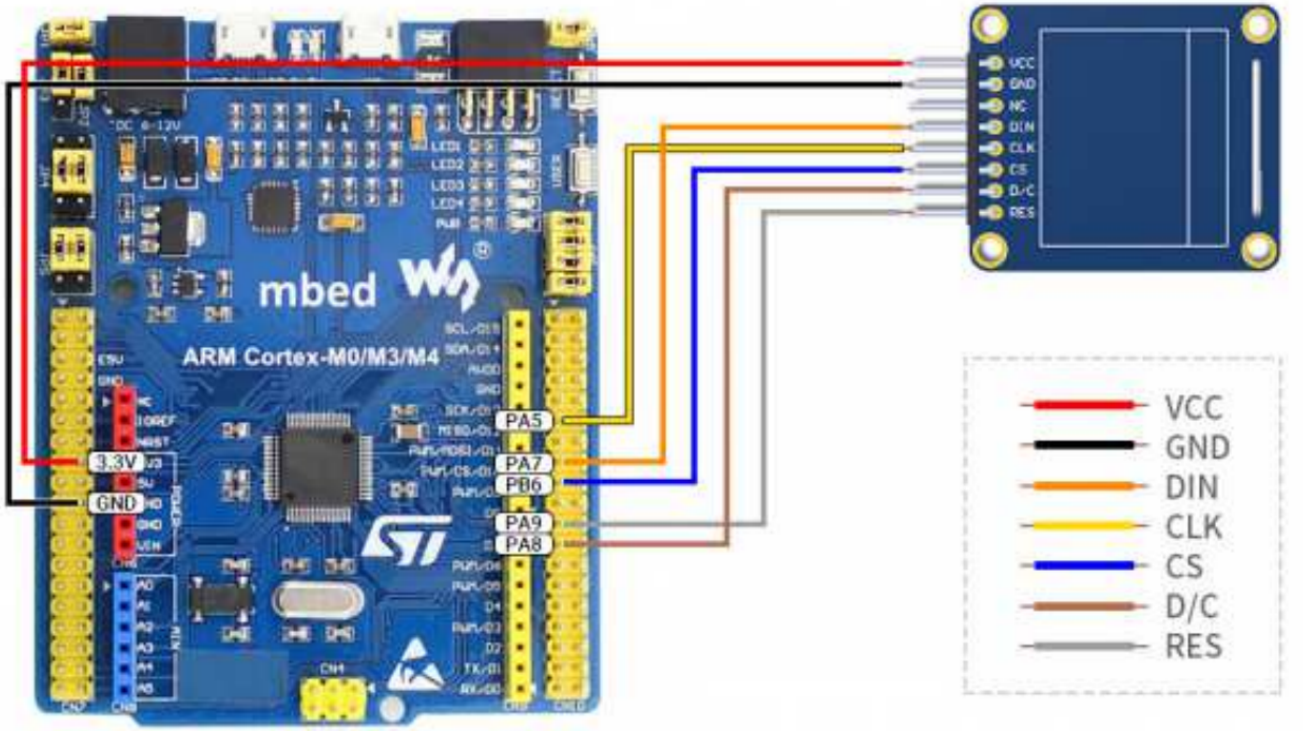

Run the demo

- Download the demo, find the STM32 demo file directory, use Keil5 to open oled_demo.uvprojx in the \STM32\STM32-F103RBT6\MDK-ARM directory.
- Then modify the corresponding function comment in main.c according to the LCD model you are using, and then recompile and download to your board.

```
97   //  OLED_0in91_test();  //  Only IIC !!!
98
99   //  OLED_0in95_rgb_test();  //  Only SPI !!!
100
101  //  OLED_0in96_test();    //  IIC must USE_IIC_SOFT
102
103  //  OLED_1in3_test();   //  IIC must USE_IIC_SOFT
104
105  //  OLED_1in3_c_test();
106
107  //  OLED_1in5_test();
108
109  //  OLED_1in5_rgb_test(); //  Only SPI !!!
```

- For examples, if you are using 1.3inch OLED Module （C）,you need to comment out the line 105. (Note: there cannot be multiple sentences without comment at the same time; the line number may be changed, please modify it according to the actual situation)
- The demo folder of each LCD model can fine in the following table:

LCD Model	Demo function
0.91inch OLED Module	OLED_0in91_test();
0.95inch RGB OLED (A)/(B)	OLED_0in95_rgb_test();
0.96inch OLED (A)/(B)	OLED_0in96_test();
1.3inch OLED (A)/(B)	OLED_1in3_test();
1.3inch OLED Module (C)	OLED_1in3_c_test();
1.5inch OLED Module	OLED_1in5_test();
1.5inch RGB OLED Module	OLED_1in5_rgb_test();

Software description

- The demo is developed based on the HAL library. Download the demo, find the STM32 program file directory, and open the oled_demo.uvprojx in the STM32\STM32F103RBT6\MDK-ARM directory to check the program.

- In addition, you can see the file directory of the project in the STM32\STM32-F103RBT6\User\ directory. The five folders are the underlying driver, sample program, font, GUI, and OLED driver.

Demo Description

Hardware interface

We package the bottom for different hardware platforms. You can check the DEV_Config.c(.h) file for more description.

- Interface selection

```
#define USE_SPI_4W              1
#define USE_IIC                 0
#define USE_IIC_SOFT            0
Note:Switch SPI/I2C directly modified here
```

- Data type

```
#define UBYTE      uint8_t
#define UWORD      uint16_t
#define UDOUBLE    uint32_t
```

- Module initialization and exit processing

```
UBYTE   System_Init(void);
void    System_Exit(void);
Note:
1.Here is some GPIO processing before and after using the LCD screen.
2.After the System_Exit(void) function is used, the OLED display will be t
urned off;
```

- Write and read GPIO

```
void    DEV_Digital_Write(UWORD Pin, UBYTE Value);
UBYTE   DEV_Digital_Read(UWORD Pin);
```

- SPI write data

```
UBYTE    SPI4W_Write_Byte(uint8_t value);
```

- IIC write data

```
void     I2C_Write_Byte(uint8_t value, uint8_t Cmd);
```

Application function

For the screen, if you need to draw pictures, display Chinese and English characters, display pictures, etc., you can use the upper application to do, and we provide some basic functions here about some graphics processing, you can check in the directory STM32\STM32F103RB\User\GUI\GUI_Paint.c(.h)

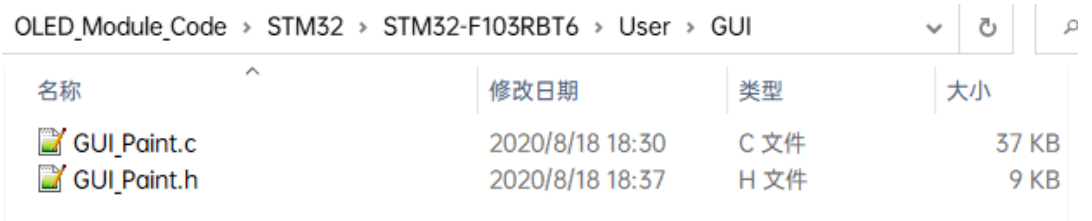

The character font which GUI dependent is in the directory STM32\STM32F103RB\User\Fonts

- New Image Properties: Create a new image property, this property includes the image buffer name, width, height, flip Angle, color.

```
void Paint_NewImage(UWORD Width, UWORD Height, UWORD Rotate, UWORD Color)
Parameters:
    Width: image buffer Width;
    Height: the Height of the image buffer;
    Rotate: Indicates the rotation Angle of an image
    Color: the initial Color of the image;
```

- Set the clear screen function

```
void Paint_SetClearFuntion(void (*Clear)(UWORD));
parameter:
    Clear : Pointer to the clear screen function, used to quickly clear th
e screen to a certain color;
```

- Set the drawing pixel function.

```
void Paint_SetDisplayFuntion(void (*Display)(UWORD,UWORD,UWORD));
parameter:
    Display: Pointer to the pixel drawing function, which is used to write
data to the specified location in the internal RAM of the OLED;
```

- Select image buffer: the purpose of the selection is that you can create multiple image attributes, there can be multiple images buffer, you can select each image you create.

```
void Paint_SelectImage(UBYTE *image)
Parameters:
    Image: the name of the image cache, which is actually a pointer to the
first address of the image buffer
```

- Image Rotation: Set the selected image rotation Angle, preferably after Paint_SelectImage(), you can choose to rotate 0, 90, 180, 270.

```
void Paint_SetRotate(UWORD Rotate)
Parameters:
    Rotate: ROTATE_0, ROTATE_90, ROTATE_180, and ROTATE_270 correspond to
0, 90, 180, and 270 degrees respectively;
```

- Image mirror flip: Set the mirror flip of the selected image. You can choose no mirror, horizontal mirror, vertical mirror, or image center mirror.

```
void Paint_SetMirroring(UBYTE mirror)
Parameters:
    Mirror: indicates the image mirroring mode. MIRROR_NONE, MIRROR_HORIZO
NTAL, MIRROR_VERTICAL, MIRROR_ORIGIN correspond to no mirror, horizontal m
irror, vertical mirror, and about image center mirror respectively.
```

- Set points of display position and color in the buffer: here is the core GUI function, processing points display position and color in the buffer.

```
void Paint_SetPixel(UWORD Xpoint, UWORD Ypoint, UWORD Color)
Parameters:
    Xpoint: the X position of a point in the image buffer
    Ypoint: Y position of a point in the image buffer
    Color: indicates the Color of the dot
```

- Image buffer fill color: Fills the image buffer with a color, usually used to flash the screen into blank.

```
void Paint_Clear(UWORD Color)
```

```
Parameters:
    Color: fill Color
```

- The fill color of a certain window in the image buffer: the image buffer part of the window filled with a certain color, usually used to fresh the screen into blank, often used for time display, fresh the last second of the screen.

```
void Paint_ClearWindows(UWORD Xstart, UWORD Ystart, UWORD Xend, UWORD Yen
d, UWORD Color)
Parameters:
    Xstart: the x-starting coordinate of the window
    Ystart: indicates the Y starting point of the window
    Xend: the x-end coordinate of the window
    Yend: indicates the y-end coordinate of the window
    Color: fill Color
```

- Draw point: In the image buffer, draw points on (Xpoint, Ypoint), you can choose the color, the size of the point, the style of the point.

```
void Paint_DrawPoint(UWORD Xpoint, UWORD Ypoint, UWORD Color, DOT_PIXEL Do
t_Pixel, DOT_STYLE Dot_Style)
Parameters:
    Xpoint: indicates the X coordinate of a point
    Ypoint: indicates the Y coordinate of a point
    Color: fill Color
    Dot_Pixel: The size of the dot, providing a default of eight size poin
ts
        typedef enum {
            DOT_PIXEL_1X1  ,            // 1 x 1
            DOT_PIXEL_2X2  ,            // 2 X 2
            DOT_PIXEL_3X3  ,            // 3 X 3
            DOT_PIXEL_4X4  ,            // 4 X 4
            DOT_PIXEL_5X5  ,            // 5 X 5
            DOT_PIXEL_6X6  ,            // 6 X 6
            DOT_PIXEL_7X7  ,            // 7 X 7
            DOT_PIXEL_8X8  ,            // 8 X 8
        } DOT_PIXEL;
    Dot_Style: the size of a point that expands from the center of the poi
nt or from the bottom left corner of the point to the right and up
        typedef enum {
            DOT_FILL_AROUND  = 1,
            DOT_FILL_RIGHTUP,
        } DOT_STYLE;
```

- Draw line: In the image buffer, draw line from (Xstart, Ystart) to (Xend, Yend), you can choose the color, line width, line style.

```
void Paint_DrawLine(UWORD Xstart, UWORD Ystart, UWORD Xend, UWORD Yend, UW
ORD Color, LINE_STYLE Line_Style ,  LINE_STYLE Line_Style)
Parameters:
    Xstart: the x-starting coordinate of the line
    Ystart: the y-starting coordinate of the line
    Xend: the x-end coordinate of the line
    Yend: the y-end coordinate of the line
    Color: fill Color
    Line_width: The width of the line, the demo provides 8 sizes of width
by default.
        typedef enum {
            DOT_PIXEL_1X1  ,            // 1 x 1
            DOT_PIXEL_2X2  ,            // 2 X 2
            DOT_PIXEL_3X3  ,            // 3 X 3
            DOT_PIXEL_4X4  ,            // 4 X 4
            DOT_PIXEL_5X5  ,            // 5 X 5
            DOT_PIXEL_6X6  ,            // 6 X 6
            DOT_PIXEL_7X7  ,            // 7 X 7
            DOT_PIXEL_8X8  ,            // 8 X 8
        } DOT_PIXEL;
    Line_Style: line style. Select whether the lines are joined in a strai
ght or dashed way
        typedef enum {
            LINE_STYLE_SOLID = 0,
            LINE_STYLE_DOTTED,
        } LINE_STYLE;
```

- Draw rectangle: In the image buffer, draw a rectangle from (Xstart, Ystart) to (Xend, Yend), you can choose the color, the width of the line, whether to fill the inside of the rectangle.

```
void Paint_DrawRectangle(UWORD Xstart, UWORD Ystart, UWORD Xend, UWORD Yen
d, UWORD Color, DOT_PIXEL Line_width,  DRAW_FILL Draw_Fill)
Parameters:
        Xstart: the starting X coordinate of the rectangle
        Ystart: the starting Y coordinate of the rectangle
        Xend: the x-end coordinate of the rectangle
        Yend: the y-end coordinate of the rectangle
        Color: fill Color
        Line_width: The width of the four sides of a rectangle. And the de
mo provides 8 sizes of width by default.
                DOT_PIXEL_1X1  ,                // 1 x 1
                DOT_PIXEL_2X2  ,                // 2 X 2
                DOT_PIXEL_3X3  ,                // 3 X 3
                DOT_PIXEL_4X4  ,                // 4 X 4
```

```
                DOT_PIXEL_5X5  ,                // 5 X 5
                DOT_PIXEL_6X6  ,                // 6 X 6
                DOT_PIXEL_7X7  ,                // 7 X 7
                DOT_PIXEL_8X8  ,                // 8 X 8
            } DOT_PIXEL;
        Draw_Fill: Fill, whether to fill the inside of the rectangle
            typedef enum {
                DRAW_FILL_EMPTY = 0,
                DRAW_FILL_FULL,
            } DRAW_FILL;
```

- Draw circle: In the image buffer, draw a circle of Radius with (X_Center Y_Center) as the center. You can choose the color, the width of the line, and whether to fill the inside of the circle.

```
void Paint_DrawCircle(UWORD X_Center, UWORD Y_Center, UWORD Radius, UWORD
Color, DOT_PIXEL Line_width,  DRAW_FILL Draw_Fill)
Parameters:
    X_Center: the x-coordinate of the center of a circle
    Y_Center: the y-coordinate of the center of the circle
    Radius: indicates the Radius of a circle
    Color: fill Color
    Line_width: The width of the arc, with a default of 8 widths
        typedef enum {
            DOT_PIXEL_1X1  ,            // 1 x 1
            DOT_PIXEL_2X2  ,            // 2 X 2
            DOT_PIXEL_3X3  ,            // 3 X 3
            DOT_PIXEL_4X4  ,            // 4 X 4
            DOT_PIXEL_5X5  ,            // 5 X 5
            DOT_PIXEL_6X6  ,            // 6 X 6
            DOT_PIXEL_7X7  ,            // 7 X 7
            DOT_PIXEL_8X8  ,            // 8 X 8
        } DOT_PIXEL;
    Draw_Fill: fill, whether to fill the inside of the circle
        typedef enum {
            DRAW_FILL_EMPTY = 0,
            DRAW_FILL_FULL,
        } DRAW_FILL;
```

- Write Ascii character: In the image buffer, use (Xstart Ystart) as the left vertex, write an Ascii character, you can select Ascii visual character library, font foreground color, font background color.

```
void Paint_DrawChar(UWORD Xstart, UWORD Ystart, const char Ascii_Char, sFO
NT* Font, UWORD Color_Foreground,  UWORD Color_Background)
Parameters:
```

```
    Xstart: the x-coordinate of the left vertex of a character
    Ystart: the Y-coordinate of the left vertex of a character
    Ascii_Char: indicates the Ascii character
    Font: Ascii visual character library, in the Fonts folder provides the
following Fonts:
        Font8: 5*8 font
        Font12: 7*12 font
        Font16: 11*16 font
        Font20: 14*20 font
        Font24: 17*24 font
    Color_Foreground: Font color
    Color_Background: indicates the background color
```

- Write English string: In the image buffer, use (Xstart Ystart) as the left vertex, write a string of English characters, you can choose Ascii visual character library, font foreground color, font background color.

```
void Paint_DrawString_EN(UWORD Xstart, UWORD Ystart, const char * pString,
sFONT* Font, UWORD Color_Foreground,  UWORD Color_Background)
Parameters:
    Xstart: the x-coordinate of the left vertex of a character
    Ystart: the Y-coordinate of the left vertex of a character
    PString: string, string is a pointer
    Font: Ascii visual character library, in the Fonts folder provides the
following Fonts:
        Font8: 5*8 font
        Font12: 7*12 font
        Font16: 11*16 font
        Font20: 14*20 font
        Font24: 17*24 font
     Color_Foreground: Font color
     Color_Background: indicates the background color
```

- Write Chinese string: in the image buffer, use (Xstart Ystart) as the left vertex, write a string of Chinese characters, you can choose GB2312 encoding character font, font foreground color, font background color.

```
void Paint_DrawString_CN(UWORD Xstart, UWORD Ystart, const char * pString,
cFONT* font, UWORD Color_Foreground,  UWORD Color_Background)
Parameters:
    Xstart: the x-coordinate of the left vertex of a character
    Ystart: the Y-coordinate of the left vertex of a character
    PString: string, string is a pointer
    Font: GB2312 encoding character Font library, in the Fonts folder prov
ides the following Fonts:
        Font12CN: ASCII font 11*21, Chinese font 16*21
```

```
        Font24CN: ASCII font24 *41, Chinese font 32*41
    Color_Foreground: Font color
    Color_Background: indicates the background color
```

- Write numbers: In the image buffer,use (Xstart Ystart) as the left vertex, write a string of numbers, you can choose Ascii visual character library, font foreground color, font background color.

```
void Paint_DrawNum(UWORD Xpoint, UWORD Ypoint, double Nummber, sFONT* Fon
t, UWORD Digit, UWORD Color_Foreground,   UWORD Color_Background)
Parameters:
    Xstart: the x-coordinate of the left vertex of a character
    Ystart: the Y-coordinate of the left vertex of a character
    Nummber: indicates the number displayed, which can be a decimal
    Digit: It's a decimal number
    Font: Ascii visual character library, in the Fonts folder provides the
following Fonts:
        Font8: 5*8 font
        Font12: 7*12 font
        Font16: 11*16 font
        Font20: 14*20 font
        Font24: 17*24 font
    Color_Foreground: Font color
    Color_Background: indicates the background color
```

- Display time: in the image buffer,use (Xstart Ystart) as the left vertex, display time,you can choose Ascii visual character font, font foreground color, font background color.

```
void Paint_DrawTime(UWORD Xstart, UWORD Ystart, PAINT_TIME *pTime, sFONT*
Font, UWORD Color_Background,  UWORD Color_Foreground)
Parameters:
    Xstart: the x-coordinate of the left vertex of a character
    Ystart: the Y-coordinate of the left vertex of a character
    PTime: display time, here defined a good time structure, as long as th
e hour, minute and second bits of data to the parameter;
    Font: Ascii visual character library, in the Fonts folder provides the
following Fonts:
        Font8: 5*8 font
        Font12: 7*12 font
        Font16: 11*16 font
        Font20: 14*20 font
        Font24: 17*24 font
    Color_Foreground: Font color
    Color_Background: indicates the background color
```

User Guides for Arduino

Provides demos based on UNO PLUS

Hardware connection

The demos we provide are based on UNO PLUS, and the connection method provided is also the corresponding UNO PLUS pins. If you need to transplant the program, please connect according to the actual pins.

Arduino UNO connection

OLED	UNO
VCC	3.3V/5V
GND	GND
DIN	SPI:D11 / I2C:SDA
CLK	SPI:D13 / I2C:SCL
CS	D10
DC	D7
RST	D8

- Four-wire SPI wiring diagram:

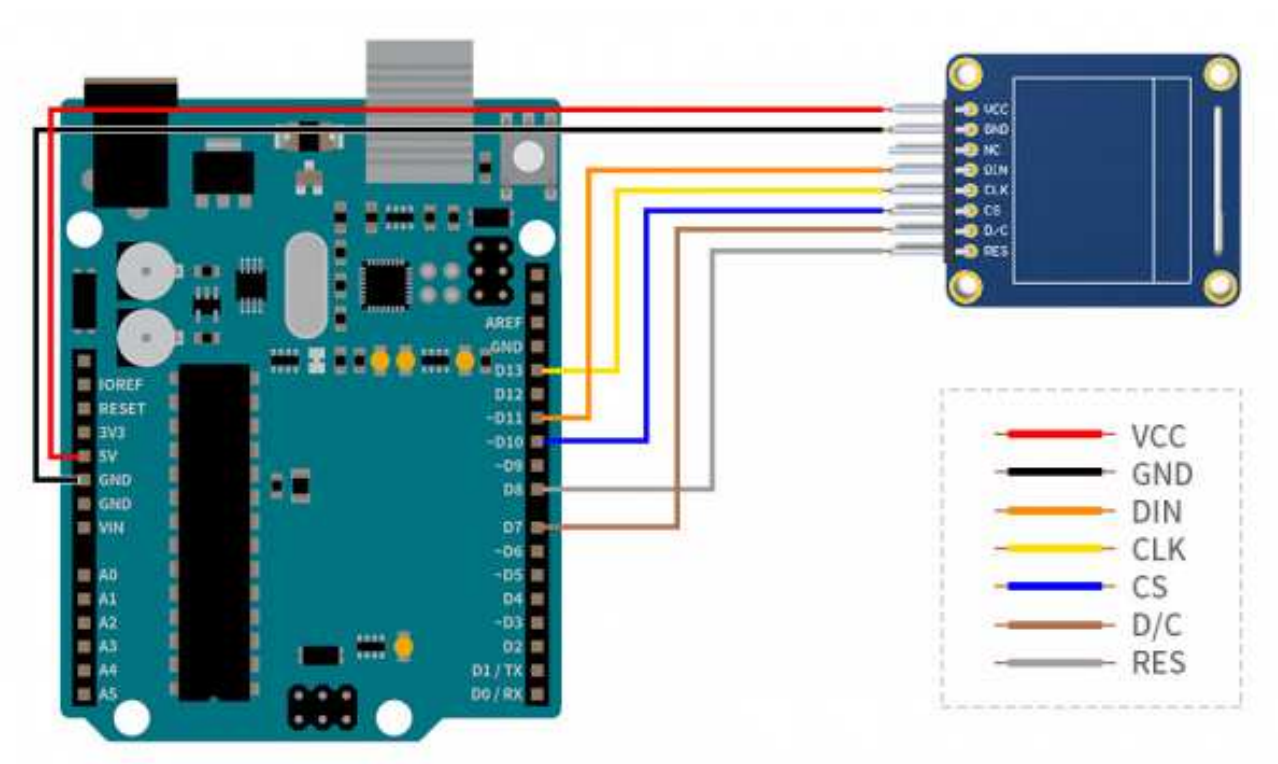

Run the demo

- Download the demo and find the Arduino demo file directory.
- Use Arduino IDE to open the .ino file in the project folder of the corresponding model, recompile and download the demo to your board.

- For example, if you are using the 1.3inch OLED Module (C), open OLED_1in3_c.ino under the \Arduino\OLED_1in3_c directory

Software Description

- Download the demo on the Resources, open the Arduino demo file directory, you can see the Arduino program of different models of OLED.

OLED_Module_Code › Arduino

名称	修改日期	类型
OLED_0in91	2020/8/20 14:17	文件夹
OLED_0in95_rgb	2020/8/20 10:49	文件夹
OLED_0in96	2020/8/21 14:59	文件夹
OLED_1in3	2020/8/21 15:05	文件夹
OLED_1in3_c	2020/8/21 14:48	文件夹
OLED_1in5	2020/8/21 14:50	文件夹
OLED_1in5_rgb	2020/8/20 10:52	文件夹

- Choose the folder according to the LCD model you are using, and open the xxx.ino file. Take the 1.3inch OLED Module (C) as an example: open OLED_1in3_c, then double-click OLED_1in3_c.ino to open the Arduino project.

OLED_Module_Code › Arduino › OLED_1in3_c

名称	修改日期	类型	大小
Debug.h	2020/8/19 19:44	H 文件	1 KB
DEV_Config.cpp	2020/7/14 17:08	CPP 文件	3 KB
DEV_Config.h	2020/8/21 14:48	H 文件	2 KB
font8.cpp	2020/6/16 9:37	CPP 文件	18 KB
font12.cpp	2020/6/16 9:37	CPP 文件	28 KB
font12CN.cpp	2020/6/16 9:37	CPP 文件	6 KB
font16.cpp	2020/6/16 9:37	CPP 文件	49 KB
font20.cpp	2020/6/16 9:37	CPP 文件	65 KB
font24.cpp	2020/6/16 9:37	CPP 文件	100 KB
font24CN.cpp	2020/6/16 9:37	CPP 文件	28 KB
fonts.h	2020/6/16 9:37	H 文件	4 KB

GUI_Paint.cpp	2020/8/21 14:44	CPP 文件	33 KB
GUI_Paint.h	2020/6/16 10:04	H 文件	8 KB
ImageData.c	2020/8/19 15:49	C 文件	7 KB
ImageData.h	2020/8/19 15:49	H 文件	2 KB
OLED_1in3_c.ino	2020/8/21 14:47	Arduino file	3 KB
OLED_Driver.cpp	2020/8/20 10:12	CPP 文件	8 KB
OLED_Driver.h	2020/8/20 10:12	H 文件	3 KB
Readme.txt	2020/7/1 15:12	文本文档	1 KB

- The demo folder of each LCD model can fine in the following table:

LCD Model	Demo folder
0.91inch OLED Module	OLED_0in91
0.95inch RGB OLED (A)/(B)	OLED_0in95_rgb
0.96inch OLED (A)/(B)	OLED_0in96
1.3inch OLED (A)/(B)	OLED_1in3
1.3inch OLED Module (C)	OLED_1in3_c
1.5inch OLED Module	OLED_1in5
1.5inch RGB OLED Module	OLED_1in5_rgb

Program Description

Underlying hardware interface

Because the hardware platform and the internal implementation are different. If you need to know the internal implementation, you can see many definitions in the directory DEV_Config.c(.h)

- Interface selection

```
#define USE_SPI_4W                  1
#define USE_IIC                     0
Note:Switch SPI/I2C directly modified here
```

- Data type

```
#define UBYTE       uint8_t
#define UWORD       uint16_t
#define UDOUBLE     uint32_t
```

- Module initialization and exit processing

```
UBYTE   System_Init(void);
void    System_Exit(void);
Note:
1.here is some GPIO processing before and after using the LCD screen.
2.After the System_Exit(void) function is used, the OLED display will be t
urned off;
```

- Write and read GPIO

```
void    DEV_Digital_Write(UWORD Pin, UBYTE Value);
UBYTE   DEV_Digital_Read(UWORD Pin);
```

- SPI write data

```
UBYTE    SPI4W_Write_Byte(uint8_t value);
```

- IIC write data

```
void     I2C_Write_Byte(uint8_t value, uint8_t Cmd);
```

The upper application

For the screen, if you need to draw pictures, display Chinese and English characters, display pictures, etc., you can use the upper application to do, and we provide some basic functions here about some graphics processing in the directory: Arduino\OLED_xxx\GUI_Paint.c(.h)

- New Image Properties: Create a new image property, this property includes the image buffer name, width, height, flip Angle, color.

```
void Paint_NewImage(UWORD Width, UWORD Height, UWORD Rotate, UWORD Color)
Parameters:
    Width: image buffer Width;
    Height: the Height of the image buffer;
    Rotate: Indicates the rotation Angle of an image
    Color: the initial Color of the image;
```

- Set the clear screen function, usually call the clear function of OLED directly.

```
void Paint_SetClearFuntion(void (*Clear)(UWORD));
parameter:
    Clear : Pointer to the clear screen function, used to quickly clear th
e screen to a certain color;
```

- Set the drawing pixel function.

```
void Paint_SetDisplayFuntion(void (*Display)(UWORD,UWORD,UWORD));
parameter:
    Display: Pointer to the pixel drawing function, which is used to write
data to the specified location in the internal RAM of the OLED;
```

- Select image buffer:the purpose of the selection is that you can create multiple image attributes, image buffer can exist multiple, you can select each image you create.

```
void Paint_SelectImage(UBYTE *image)
Parameters:
    Image: the name of the image cache, which is actually a pointer to the
first address of the image buffer
```

- Image Rotation: Set the selected image rotation Angle, preferably after Paint_SelectImage(), you can choose to rotate 0, 90, 180, 270.

```
void Paint_SetRotate(UWORD Rotate)
Parameters:
    Rotate: ROTATE_0, ROTATE_90, ROTATE_180, and ROTATE_270 correspond to
0, 90, 180, and 270 degrees respectively;
```

- Image mirror flip: Set the mirror flip of the selected image. You can choose no mirror, horizontal mirror, vertical mirror,or image center mirror.

```
void Paint_SetMirroring(UBYTE mirror)
Parameters:
    Mirror: indicates the image mirroring mode. MIRROR_NONE, MIRROR_HORIZO
NTAL, MIRROR_VERTICAL, MIRROR_ORIGIN correspond to no mirror, horizontal m
irror, vertical mirror, and about image center mirror respectively.
```

- Set points of display position and color in the buffer: here is the core GUI function, processing points display position and color in the buffer.

```
void Paint_SetPixel(UWORD Xpoint, UWORD Ypoint, UWORD Color)
Parameters:
    Xpoint: the X position of a point in the image buffer
    Ypoint: Y position of a point in the image buffer
    Color: indicates the Color of the dot
```

- Image buffer fill color: Fills the image buffer with a color, usually used to flash the screen into blank.

```
void Paint_ClearWindows(UWORD Xstart, UWORD Ystart, UWORD Xend, UWORD Yen
d, UWORD Color)
Parameters:
    Xstart: the x-starting coordinate of the window
    Ystart: indicates the Y starting point of the window
    Xend: the x-end coordinate of the window
    Yend: indicates the y-end coordinate of the window
    Color: fill Color
```

- Draw points: In the image buffer, draw points on (Xpoint, Ypoint), you can choose the color, the size of the point, the style of the point.

```
void Paint_DrawPoint(UWORD Xpoint, UWORD Ypoint, UWORD Color, DOT_PIXEL Do
t_Pixel, DOT_STYLE Dot_Style)
Parameters:
    Xpoint: indicates the X coordinate of a point
    Ypoint: indicates the Y coordinate of a point
    Color: fill Color
    Dot_Pixel: The size of the dot, providing a default of eight size poin
ts
        typedef enum {
                DOT_PIXEL_1X1  ,                // 1 x 1
                DOT_PIXEL_2X2  ,                // 2 X 2
                DOT_PIXEL_3X3  ,                // 3 X 3
                DOT_PIXEL_4X4  ,                // 4 X 4
                DOT_PIXEL_5X5  ,                // 5 X 5
```

```
                DOT_PIXEL_6X6  ,                // 6 X 6
                DOT_PIXEL_7X7  ,                // 7 X 7
                DOT_PIXEL_8X8  ,                // 8 X 8
        } DOT_PIXEL;
    Dot_Style: the size of a point that expands from the center of the poi
nt or from the bottom left corner of the point to the right and up
        typedef enum {
                DOT_FILL_AROUND  = 1,
                DOT_FILL_RIGHTUP,
        } DOT_STYLE;
```

- Line drawing: In the image buffer, line from (Xstart, Ystart) to (Xend, Yend), you can choose the color, line width, line style.

```
void Paint_DrawLine(UWORD Xstart, UWORD Ystart, UWORD Xend, UWORD Yend, UW
ORD Color, LINE_STYLE Line_Style ,  LINE_STYLE Line_Style)
Parameters:
        Xstart: the x-starting coordinate of a line
        Ystart: indicates the Y starting point of a line
        Xend: x-terminus of a line
        Yend: the y-end coordinate of a line
        Color: fill Color
        Line_width: The width of the line, which provides a default of eig
ht widths
                typedef enum {
                        DOT_PIXEL_1X1  ,                // 1 x 1
                        DOT_PIXEL_2X2  ,                // 2 X 2
                        DOT_PIXEL_3X3  ,                // 3 X 3
                        DOT_PIXEL_4X4  ,                // 4 X 4
                        DOT_PIXEL_5X5  ,                // 5 X 5
                        DOT_PIXEL_6X6  ,                // 6 X 6
                        DOT_PIXEL_7X7  ,                // 7 X 7
                        DOT_PIXEL_8X8  ,                // 8 X 8
                    } DOT_PIXEL;
        Line_Style: line style. Select whether the lines are joined in a s
traight or dashed way
                typedef enum {
                        LINE_STYLE_SOLID = 0,
                        LINE_STYLE_DOTTED,
                } LINE_STYLE;
```

- Draw rectangle: In the image buffer, draw a rectangle from (Xstart, Ystart) to (Xend, Yend), you can choose the color, the width of the line, whether to fill the inside of the rectangle.

```
void Paint_DrawRectangle(UWORD Xstart, UWORD Ystart, UWORD Xend, UWORD Yen
```

```
d, UWORD Color, DOT_PIXEL Line_width,  DRAW_FILL Draw_Fill)
Parameters:
        Xstart: the starting X coordinate of the rectangle
        Ystart: indicates the Y starting point of the rectangle
        Xend: X terminus of the rectangle
        Yend: specifies the y-end coordinate of the rectangle
        Color: fill Color
        Line_width: The width of the four sides of a rectangle. Default ei
ght widths are provided
        typedef enum {
                DOT_PIXEL_1X1  ,                // 1 x 1
                DOT_PIXEL_2X2  ,                // 2 X 2
                DOT_PIXEL_3X3  ,                // 3 X 3
                DOT_PIXEL_4X4  ,                // 4 X 4
                DOT_PIXEL_5X5  ,                // 5 X 5
                DOT_PIXEL_6X6  ,                // 6 X 6
                DOT_PIXEL_7X7  ,                // 7 X 7
                DOT_PIXEL_8X8  ,                // 8 X 8
        } DOT_PIXEL;
        Draw_Fill: Fill, whether to fill the inside of the rectangle
        typedef enum {
                DRAW_FILL_EMPTY = 0,
                DRAW_FILL_FULL,
        } DRAW_FILL;
```

- Draw circle: In the image buffer, draw a circle of Radius with (X_Center Y_Center) as the center. You can choose the color, the width of the line, and whether to fill the inside of the circle.

```
void Paint_DrawCircle(UWORD X_Center, UWORD Y_Center, UWORD Radius, UWORD
Color, DOT_PIXEL Line_width,  DRAW_FILL Draw_Fill)
Parameters:
        X_Center: the x-coordinate of the center of a circle
        Y_Center: Y coordinate of the center of a circle
        Radius: indicates the Radius of a circle
        Color: fill Color
        Line_width: The width of the arc, with a default of 8 widths
        typedef enum {
                DOT_PIXEL_1X1  ,                // 1 x 1
                DOT_PIXEL_2X2  ,                // 2 X 2
                DOT_PIXEL_3X3  ,                // 3 X 3
                DOT_PIXEL_4X4  ,                // 4 X 4
                DOT_PIXEL_5X5  ,                // 5 X 5
                DOT_PIXEL_6X6  ,                // 6 X 6
                DOT_PIXEL_7X7  ,                // 7 X 7
                DOT_PIXEL_8X8  ,                // 8 X 8
        } DOT_PIXEL;
```

```
        Draw_Fill: fill, whether to fill the inside of the circle
        typedef enum {
                DRAW_FILL_EMPTY = 0,
                DRAW_FILL_FULL,
        } DRAW_FILL;
```

- Write Ascii character: In the image buffer, at (Xstart Ystart) as the left vertex, write an Ascii character, you can select Ascii visual character library, font foreground color, font background color.

```
void Paint_DrawChar(UWORD Xstart, UWORD Ystart, const char Ascii_Char, sFO
NT* Font, UWORD Color_Foreground,  UWORD Color_Background)
Parameters:
        Xstart: the x-coordinate of the left vertex of a character
        Ystart: the Y coordinate of the font's left vertex
        Ascii_Char: indicates the Ascii character
        Font: Ascii visual character library, in the Fonts folder provides
the following Fonts:
                Font8: 5*8 font
                Font12: 7*12 font
                Font16: 11*16 font
                Font20: 14*20 font
                Font24: 17*24 font
        Color_Foreground: Font color
        Color_Background: indicates the background color
```

- Write English string: In the image buffer, use (Xstart Ystart) as the left vertex, write a string of English characters, can choose Ascii visual character library, font foreground color, font background color.

```
void Paint_DrawString_EN(UWORD Xstart, UWORD Ystart, const char * pString,
sFONT* Font, UWORD Color_Foreground,  UWORD Color_Background)
Parameters:
        Xstart: the x-coordinate of the left vertex of a character
        Ystart: the Y coordinate of the font's left vertex
        PString: string, string is a pointer
        Font: Ascii visual character library, in the Fonts folder provides
the following Fonts:
                Font8: 5*8 font
                Font12: 7*12 font
                Font16: 11*16 font
                Font20: 14*20 font
                Font24: 17*24 font
        Color_Foreground: Font color
        Color_Background: indicates the background color
```

- Write Chinese string: in the image buffer, use (Xstart Ystart) as the left vertex, write a string of Chinese characters, you can choose GB2312 encoding character font, font foreground color, font background color.

```
void Paint_DrawString_CN(UWORD Xstart, UWORD Ystart, const char * pString,
cFONT* font, UWORD Color_Foreground,  UWORD Color_Background)
Parameters:
        Xstart: the x-coordinate of the left vertex of a character
        Ystart: the Y coordinate of the font's left vertex
        PString: string, string is a pointer
        Font: GB2312 encoding character Font library, in the Fonts folder
provides the following Fonts:
                Font12CN: ASCII font 11*21, Chinese font 16*21
                Font24CN: ASCII font24 *41, Chinese font 32*41
        Color_Foreground: Font color
        Color_Background: indicates the background color
```

- Write numbers: In the image buffer,use (Xstart Ystart) as the left vertex, write a string of numbers, you can choose Ascii visual character library, font foreground color, font background color.

```
void Paint_DrawNum(UWORD Xpoint, UWORD Ypoint, double Nummber, sFONT* Fon
t, UWORD Digit, UWORD Color_Foreground,   UWORD Color_Background)
Parameters:
        Xpoint: the x-coordinate of the left vertex of a character
        Ypoint: the Y coordinate of the left vertex of the font
        Nummber: indicates the number displayed, which can be a decimal
        Digit: It's a decimal number
        Font: Ascii visual character library, in the Fonts folder provides
the following Fonts:
                Font8: 5*8 font
                Font12: 7*12 font
                Font16: 11*16 font
                Font20: 14*20 font
               Font24: 17*24 font
        Color_Foreground: Font color
        Color_Background: indicates the background color
```

- Display time: in the image buffer,use (Xstart Ystart) as the left vertex, display time,you can choose Ascii visual character font, font foreground color, font background color.

```
void Paint_DrawTime(UWORD Xstart, UWORD Ystart, PAINT_TIME *pTime, sFONT*
Font, UWORD Color_Background,  UWORD Color_Foreground)
Parameters:
        Xstart: the x-coordinate of the left vertex of a character
```

```
        Ystart: the Y coordinate of the font's left vertex
        PTime: display time, here defined a good time structure, as long a
s the hour, minute and second bits of data to the parameter;
        Font: Ascii visual character library, in the Fonts folder provides
the following Fonts:
                Font8: 5*8 font
                Font12: 7*12 font
                Font16: 11*16 font
                Font20: 14*20 font
                Font24: 17*24 font
        Color_Foreground: Font color
        Color_Background: indicates the background color
```

Resources

Document

- User Manual
- Schematic
- Dimensions
- Code
- Demo codes (New)
- SDD1306 Datasheet

Software

- lcd
- Image2Lcd

FAQ

Question: How many volts can an OLED module be used in a system?

Answer:
The OLED module is used in a 3.3V system by default, but after more than 24 hours of burn-in test, it is found that it can also work normally in a 5V system.

Question: How many hours is the service life of an OLED module?

Answer:
Under normal working conditions, generally 50,000 hours

Question: What is the working current of the OLED module?

Answer:
At the operating voltage of 3.3V:

Working current of 0.95inch RGB OLED: about 38mA for full white display, about 4mA for full black display.

The working current of 0.96inch OLED is about 25mA when fully on, and 1.5mA when fully off.

Working current of 1.3inch OLED: about 29mA when fully on, 1.0mA when fully off.

Question: Why does the OLED module not turn on when it is connected to the power supply?

Answer:
OLED has no backlight, and the display is self-illuminating. Only connect VCC and GND, the OLED will not light up.
Program control is required to brighten the OLED.

Question: What should I pay attention to when using this OLED module?

Answer:
1. Be careful not to connect the power supply in reverse.
2. The same picture cannot be displayed for a long time, otherwise it will produce afterimages and cause damage to the OLED.