MaxiCharger AC Elite (Residential)

User Manual

Trademarks

Autel® and MaxiCharger® are trademarks of Autel Intelligent Technology Corp., Ltd., registered in China, the United States and other countries. All other marks are trademarks or registered trademarks of their respective holders.

Copyright Information

No part of this manual may be reproduced, stored in a retrieval system or transmitted, in any form or by any means, electronic, mechanical, photocopying, recording, or otherwise without the prior written permission of Autel.

Disclaimer of Warranties and Limitation of Liabilities

All information, specifications and illustrations in this manual are based on the latest information available at the time of printing.

Autel reserves the right to make changes at any time without notice. While information of this manual has been carefully checked for accuracy, no guarantee is given for the completeness and correctness of the contents, including but not limited to the product specifications, functions, and illustrations.

Autel will not be liable for any direct, special, incidental, indirect damages or any economic consequential damages (including the loss of profits).

For Services and Support (24/7):

Web: www.autelenergy.us

Tel: (844) 765-0150

Email: evsupport@autel.com

Address*:* 36 Harbor Park Drive, Port Washington, New York, USA 11050

For technical assistance in all other markets, please contact your local selling agent.

Safety Information

For your own safety and the safety of others, and to prevent damage to the device and vehicles upon which it is used, it is important that the safety instructions presented throughout this manual be read and understood by all persons operating or coming into contact with the device.

(1) “IMPORTANT SAFETY INSTRUCTIONS” and “SAVE THESE INSTRUCTIONS”

INSTRUCTIONS IMPORTANTES CONCERNANT LA SÉCURITÉ CONSERVER CES INSTRUCTIONS

(2) INSTRUCTIONS PERTAINING TO A RISK OF FIRE OR ELECTRIC SHOCK

INSTRUCTIONS AYANT TRAIT À UN RISQUE D’INCENDIE OU DE CHOC ÉLECTRIQUE

Safety Messages

Safety messages are provided to help prevent personal injury and equipment damage. All safety messages are introduced by a single word indicating the hazard level.

DANGER

Indicates an imminently hazardous situation with a high risk level which, if the danger is not avoided, will cause death or serious injury.

WARNING

Indicates a potentially hazardous situation with moderate risk level which, if the warning is not obeyed, can cause death or serious injury.

CAUTION

Indicates a potentially hazardous situation with a medium risk level which, if the caution is not obeyed, may cause minor or moderate injury or damage to the equipment.

The safety messages herein cover situations Autel is aware of. Autel cannot know, evaluate or advise you as to all of the possible hazards. You must be certain that any condition or service procedure encountered does not jeopardize your personal safety.

SAFETY WARNINGS

- Read and follow all warnings and instructions before installing and operating the charger.
- This equipment should only be installed by a licensed electrician in accordance with all local codes and ordinances.
- This equipment must be grounded through a permanent wiring system or an equipment-grounding conductor.
- Do not install or use this equipment near flammable, explosive, harsh, or combustible materials, chemicals or vapors.
- Children should be supervised when around this equipment.
- Do not insert fingers or foreign objects into the electric vehicle connector.

- Do not use the equipment if the flexible power cord or EV cable is frayed, broken or otherwise damaged, or fails to operate.
- Do not use the equipment if the enclosure or the EV connector is frayed, broken or otherwise damaged, or fails to operate.
- Use 90 °C wire copper conductors only.
- Do not operate the equipment outside its operating temperature range of -40 to 131 °F (-40 to 55 °C).
- Incorrect installation and testing of the equipment could potentially damage the vehicle's battery, components, and/or the equipment itself.
- Handle the equipment with care during transportation. Do not subject it to strong force or impact or pull, twist, tangle, drag or step on the equipment, to prevent damage to it or any components.
- For NEMA plug-in version, use only the NEMA outlet (6-50 or 14-50).
- Neutral must be bonded to Ground upstream at the transformer or panel for each separately derived system.

For use with Electric Vehicles

Pour utilisation avec desvéhicules électriques

Ventilation Not Required

Aucune ventilation requise

Use Copper Conductors Only

Utiliser uniquement des conducteurs en cuivre

CAUTION

To avoid a risk of fire or electric shock, do not use this device with an extension cord.

AVERTISSEMENT

Pour réduire le risque de choc électrique ou d’incendie, ne pas utiliser de rallonge avec cet appareil.

THE SUITABILITY OF THE USE OF FLEXIBLE CORD IN ACCORDANCE WITH CE CODE, PART I, RULE 4-012, IS TO BE DETERMINED BY THE LOCAL INSPECTION AUTHORITY HAVING JURISDICTION

C’EST À L’AUTORITÉ LOCALE COMPÉTENTE EN MATIÈRE D’INSPECTION QU’INCOMBE DE DÉTERMINER SI UN CORDON SOUPLE PEUT ÊTRE UTILISÉ CONFORMÉMENT À L’ARTICLE 4-012 DU CCÉ, PREMIÈRE PARTIE

CAUTION

To reduce the risk of electric shock, connect only to properly grounded outlets.

ATTENTION

Pour réduire le risque de choc électrique, brancher sur une prise correctement mise à la terre.

CAUTION

Risk of electric shock. Do not remove cover or attempt to open the enclosure. No user serviceable parts inside. Refer servicing to qualified service personnel.

ATTENTION

Risque de choc électrique. Ne pas retirer le couvercle ni essayer d'ouvrir le boîtier. Aucune pièce interne réparable par l'utilisateur. Confier tout travail d'entretien ou de réparation à un technicien qualifié.

WARNING

This device is intended only for charging vehicles not requiring ventilation during charging.

AVERTISSEMENT

Ce dispositif est destiné au chargement des véhicules ne nécessitant pas de ventilation au cours du chargement.

WARNING

Automatic reset feature is provided.

AVERTISSEMENT

Caractéristique de réarmement automatique incluse.

CONTENTS

SAFETY INFORMATION ..... **II**

SAFETY MESSAGES ..... **II**

1 USING THIS MANUAL **1**

1.1 CONVENTIONS 1

2 GENERAL INTRODUCTION **2**

2.1 PRODUCT OVERVIEW 3
2.2 MODELS 5
2.3 IN THE BOX 6
2.4 INSTALLATION TOOLS (NOT INCLUDED) 7

3 INSTALLATION **8**

3.1 ELECTRICAL DESIGN 8
3.2 PREPARING FOR INSTALLATION 9
3.3 NEMA PLUG-IN OUTLET 11
3.4 INSTALLING THE CHARGER 12
3.5 POWER SUPPLY WIRING 16
3.6 CONNECTING THE ETHERNET CABLE 18
3.7 RS485 CABLE WIRING (OPTIONAL) 18
3.8 ADJUSTING THE RATED CURRENT 19
3.9 INSTALLING THE HOLSTER 20

4 OPERATION **21**

4.1 POWERING ON 21
4.2 ADDING YOUR CHARGER 21
4.3 START CHARGING 22
4.4 STOP CHARGING 22

5 TROUBLESHOOTING AND SERVICE **23**

5.1 TROUBLESHOOTING TABLE 23

6 SPECIFICATIONS **24**

6.1 SPECIFICATIONS 24
6.2 PRODUCT DIMENSIONS 26

7 COMPLIANCE **27**

1 Using This Manual

This manual describes the installation and use of the MaxiCharger AC Elite (residential). Prior to installation, read through this manual to be familiarized with the instructions of this MaxiCharger to ensure a successful installation and smooth operations.

1.1 Conventions

The following conventions are used:

1.1.1 Bold Text

Bold text is used to highlight selectable items such as buttons and menu options.

1.1.2 Notes and Important Messages

Notes

A **NOTE** provides helpful information such as additional explanations, tips, and comments.

Important

IMPORTANT indicates a situation which, if not avoided, may result in damage to the test equipment or vehicle.

1.1.3 Illustrations

Illustrations used in this manual are only examples; the actual product(s) or screens may vary.

1.1.4 Revision History

Version	Date	Descriptions
V1	2022.05.25	Initial version
V2	2023.04.17	Complete manual overhaul
V2.1	2023.05.22	Renewed specifications and installation steps

2 General Introduction

The MaxiCharger AC Elite (residential) is designed to charge a plug-in hybrid electric vehicle or an electric vehicle (hereinafter called EV) at your home or condo. Our chargers provide you with safe, reliable, fast, and smart charging solutions.

This manual will instruct you on how to install and use this charger.

Intended Use

This MaxiCharger is intended for the AC charging of EVs. It is intended for both indoor and outdoor use.

DANGER

- If you use the charger in any way other than described in this manual or other related documents, possible death, injury and damage to property can occur.
- Use the charger only as intended.

NOTE

- The MaxiCharger AC Elite (residential) can have an in-body holster or a separate holster. The illustrations in this manual use the separate holster model as an example.
- The images and illustrations depicted in this manual may differ slightly from the actual ones.

2.1 Product Overview

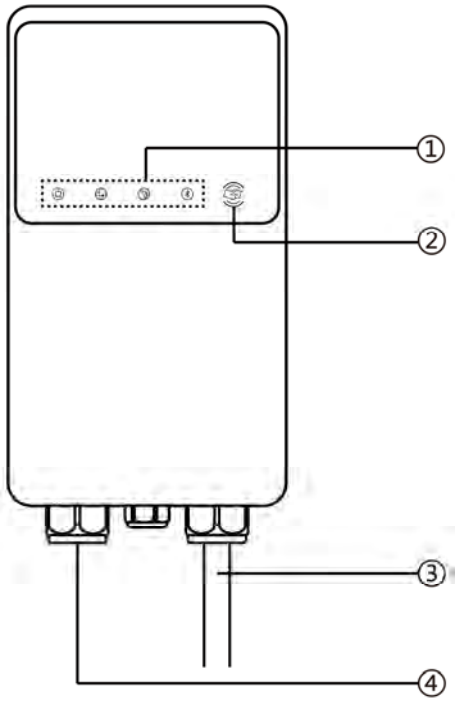

1. LED Indicators (from left to right):
   - Power LED
   - Internet Connection LED
   - Charging LED
   - Bluetooth Connection LED
2. RFID LED
3. EV Charging Cable
4. Bottom AC Inlet Hole
5. Bottom Ethernet Cable Port
6. Mounting Screws
7. Rear AC Inlet Hole
8. Rear Ethernet Cable Port
9. Product Label
10. RJ45 Port
11. RS485 Port — connects the RS485 cables
12. Current Selector — adjusts the current for the charger

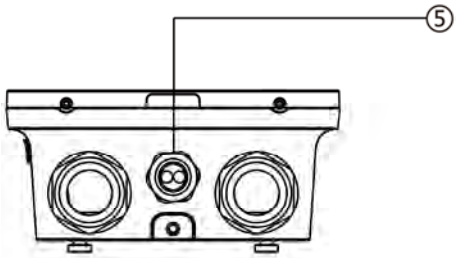

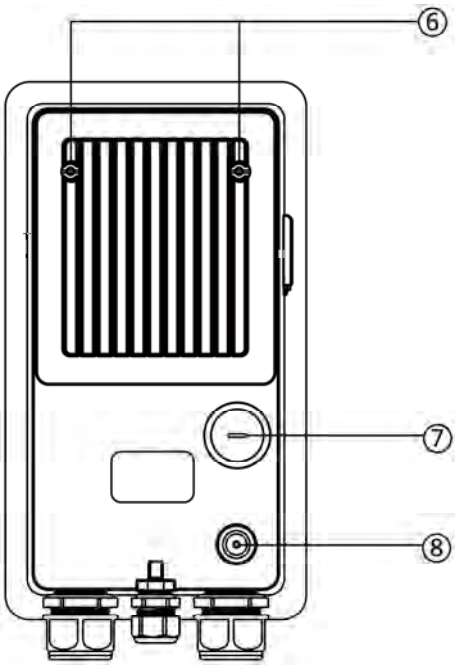

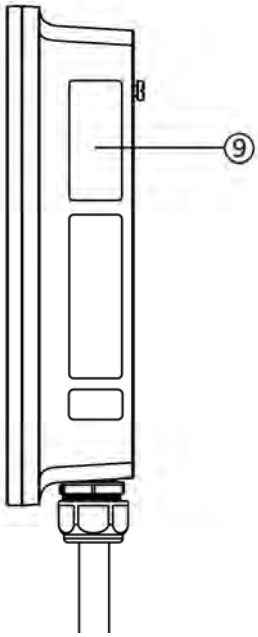

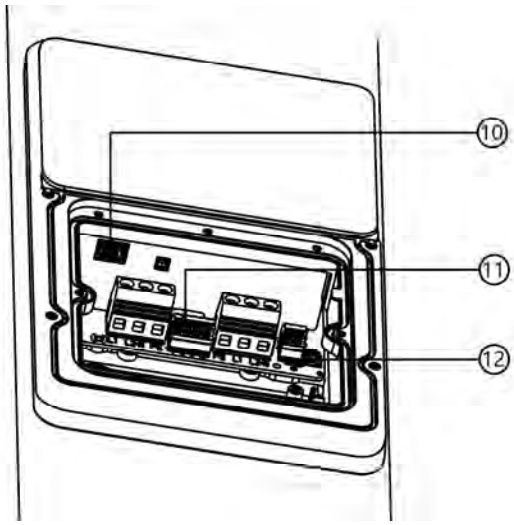

LED Description

LED	Description
Power LED	● **Solid Green:** The charger is on. ● **Not Illuminated:** The charger is off. ● **Flashing Yellow:** Data is being transmitted and/or firmware is upgrading. ● **Solid Yellow:** Firmware upgrade has failed. ● **Solid Blue:** Data transmission has failed; will illuminate green in five seconds.
Internet Connection LED	● **Solid Green:** The charger is connected to the Internet. ● **Not Illuminated:** The charger is not connected to the Internet. ● **Flashing Green:** The charger has joined the DLB (Dynamic Load Balancing) network.
Charging LED	● **Solid Blue:** An EV is connected. ● **Flashing Blue:** A schedule is active. ● **Flashing Green:** An EV is charging. ● **Solid Green:** A charge session has ended. ● **Not Illuminated:** The charger is not connected. ● **Solid Yellow:** A recoverable error has occurred or it is temporarily disabled by the server. ● **Solid Red:** An irrecoverable error has occurred. (Please contact support.)
Bluetooth Connection LED	● **Flashing Green:** The charger is connected to a mobile device via Bluetooth. ● **Not Illuminated:** The charger is not connected via Bluetooth.
RFID LED	● **Illuminated:** The RFID function is enabled. You can use the RFID card to start and stop charging. ● **Not Illuminated:** The RFID function is disabled.

NOTE

The RFID card is purchased separately.

2.2 Models

Separate Holster Model

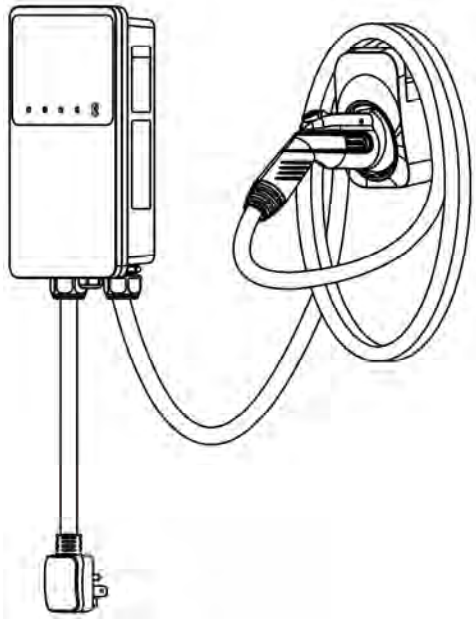

NEMA Plug-in Version

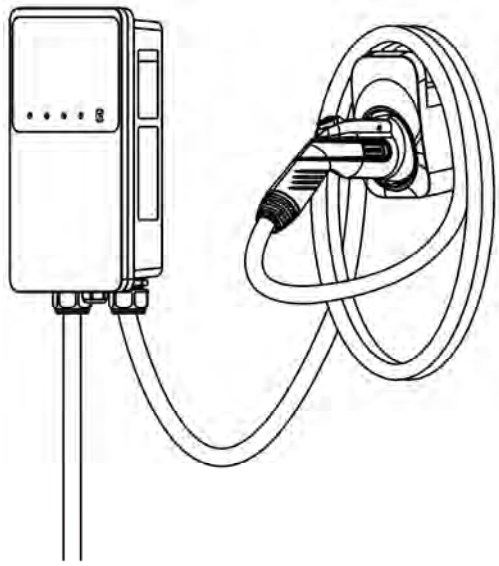

Hardwire Version

NOTE

The Hardwire is not included in the package.

In-Body Holster Model

A. Holster

B. Connector

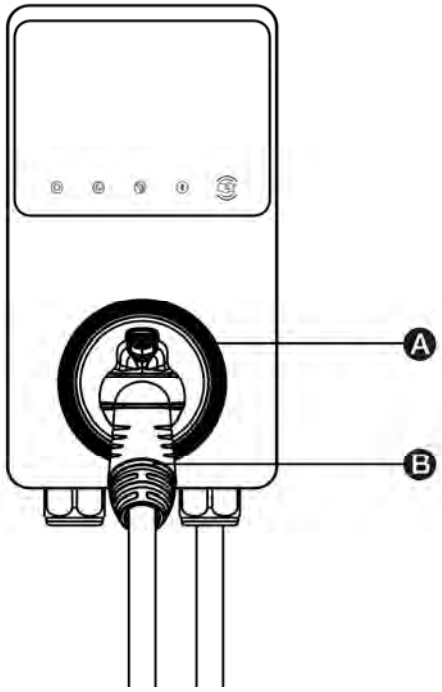

2.3 In the Box

Ensure that all parts are delivered according to the order. Check the packages for the following parts.

Charger
1 PC

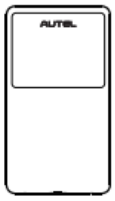

Wall Dock
1 PC

Screw (M6 x 50)
2 PCS

Screw (M5 x 12)
1 PC

Wall Anchor (5/16”)
2 PCS

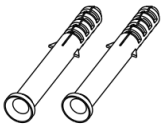

Bottom Entry Power Conduit Plug (M32)
1 PC

Quick Reference Guide
1 PC

Packing List
1 PC

Amperage Labels
1 PC

T10 Torx Screwdriver
1 PC

T25 Torx Screwdriver
1 PC

Holster & Mounting

Holster
1 PC

Wall Dock
1 PC

Screw (M6 x 50)
3 PCS

Screw (M5 x 12)
1 PC

Wall Anchor (5/16”)
3 PCS

NOTE

The **Holster & Mounting** accessories are only applicable to the separate holster model.

2.4 Installation Tools (Not Included)

- Wall stud finder
- Pencil or marker
- PH2 screwdriver
- 5/16” drill bit
- Power drill
- Spirit ruler
- Flathead screwdriver
- Multimeter

3 Installation

3.1 Electrical Design

3.1.1 Upstream Wiring

Chargers are considered continuous load devices (EVs draw maximum load for long durations); therefore, electrical branch circuits must be sized at 125% of the load for North American installations, in accordance with National Electric Code (NEC) requirements. (For other regions, refer to local code.) This means that for a maximum 40 A load at 208/240 V output to an electric vehicle, 50 A breaker is required.

Wiring must be sized in accordance with NEC code for continuous load devices. Typically, 16 mm^2 or 10 mm^2 (6 AWG or 8 AWG) insulated electrical wire is used, depending upon the rating of the circuit and the distance between the electrical panel and the charger. The terminal block accepts a maximum of 16 mm^2 (6 AWG).

240 VAC Panel

1. Main Breaker
2. PE Bus
3. L1
4. L2
5. Local Service or Sub Panel
6. L1
7. L2
8. PE
9. Input Terminal Block
10. Output Terminal Block

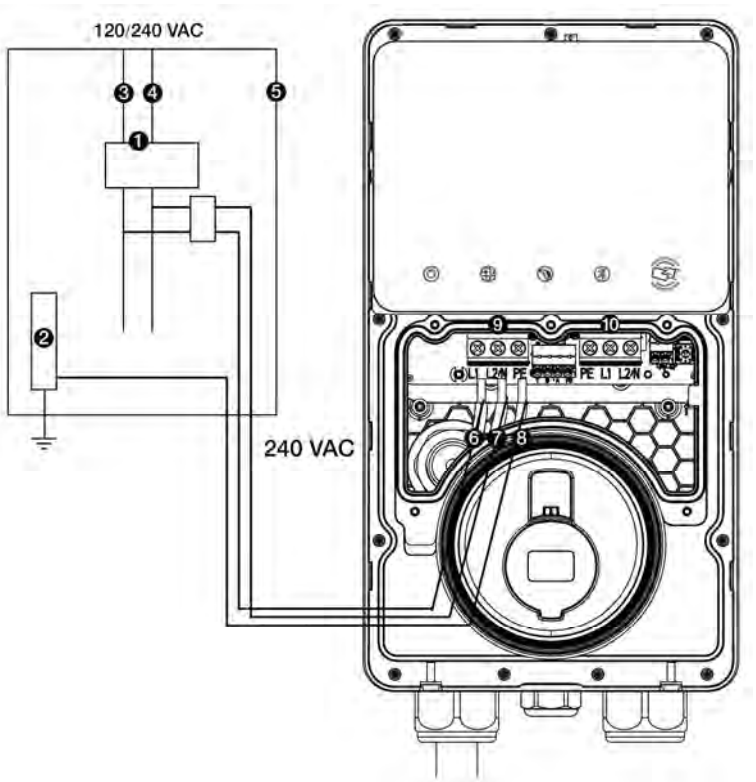

208 VAC Panel

1. Main Breaker
2. PE Bus
3. L1
4. L2
5. L3
6. Local Service or Sub Panel
7. L1
8. L2
9. PE
10. Input Terminal Block
11. Output Terminal Block

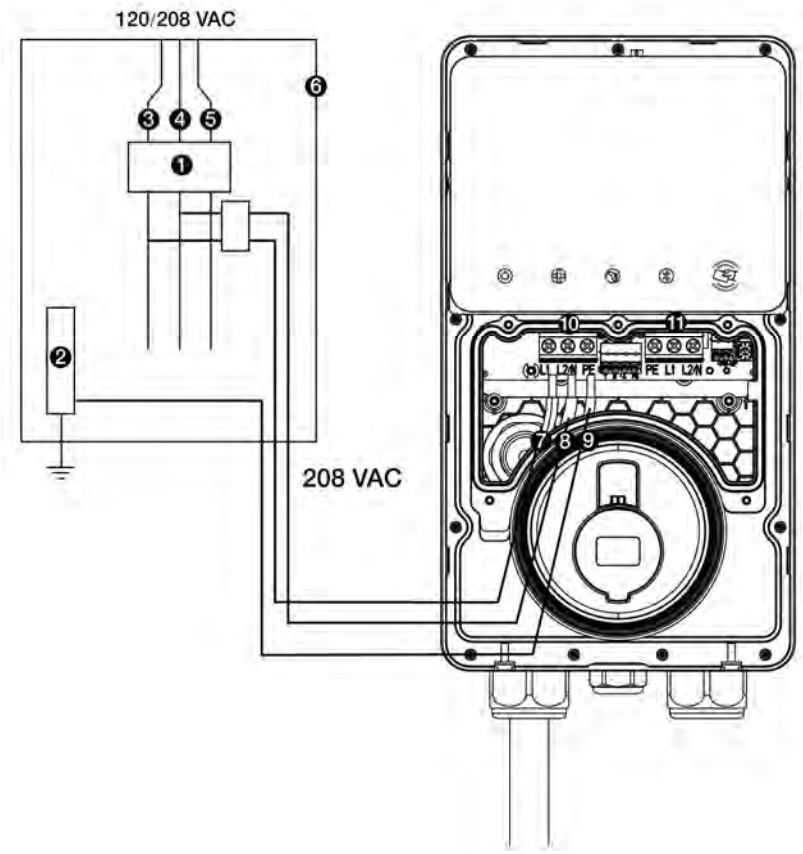

3.1.2 Grounding Requirements

The charger must be connected to a grounded, metal, and permanent wiring system. An equipment-grounding conductor must be run with circuit conductors and connected to an equipment-grounding terminal or lead on the charger.

A grounding conductor that complies with applicable codes must be grounded to earth at the service equipment or, when supplied by a separate system, at the supply transformer.

Neutral is not used to power the charger but must be properly connected to ground, at the panel transformer, to provide necessary voltage reference relative to ground.

3.2 Preparing for Installation

3.2.1 Location

- Install the charger on a flat and vertical surface capable of supporting its weight (e.g., a finished wall or pedestal). The maximum weight of a MaxiCharger AC Elite (residential) is approximately 15.4 lbs. (7 kg).
- Install the charger in a location that allows the charging cable to remain within its bending tolerance.
- Position the charger in a location where it is not vulnerable to being damaged.

3.2.2 Positioning

1. Determine the desired charging amperage and whether the desired circuit rating requires a hardwired circuit. Choose based on the electrical capacity in the panel, the desired speed of charging, and whether the user prefers a NEMA plug-in or hardwired installation.

Circuit Rating	Max Load	Estimated Range per Hour	NEMA Plug-in	Hardwire
50 A	40 A	Up to 38 miles/61 km	Yes	Yes
40 A	32 A	Up to 30 miles/48 km	Yes	Yes

IMPORTANT

In Canada, a NEMA plug-in installation is only allowed with a 50 amp circuit.

The MaxiCharger AC Elite (residential) can also be wired for higher amperages. Consult all applicable codes for breaker and wire sizing requirements. The field-wiring terminal is rated to 105 °C and accepts a maximum of 6 AWG (16 mm²) wire (copper wire only).

Circuit Rating	Max Load	Estimated Range per Hour	NEMA Plug-in	Hardwire
70 A	50 A	Up to 45 miles/72 km	No	Yes

2. For NEMA plug-in installation, determine the purchased plug type, either a NEMA 6-50 or 14-50 plug.

3. Ensure the electrical panel supports a 240 V dedicated circuit with a new, dedicated, and non-GFCI two-pole circuit breaker, in accordance with local codes and ordinances.

4. The recommended installation height for the charger is shown in the diagram below. Additionally, the minimum outdoor installation height is 24 inches (600 mm) and that of indoor is 18 inches (450 mm).

5. The NEMA plug-in version requires an outdoor-rated and weather-resistant electrical outlet, and the hardwire version requires an outdoor-rated and weather-resistant hardwired installation.

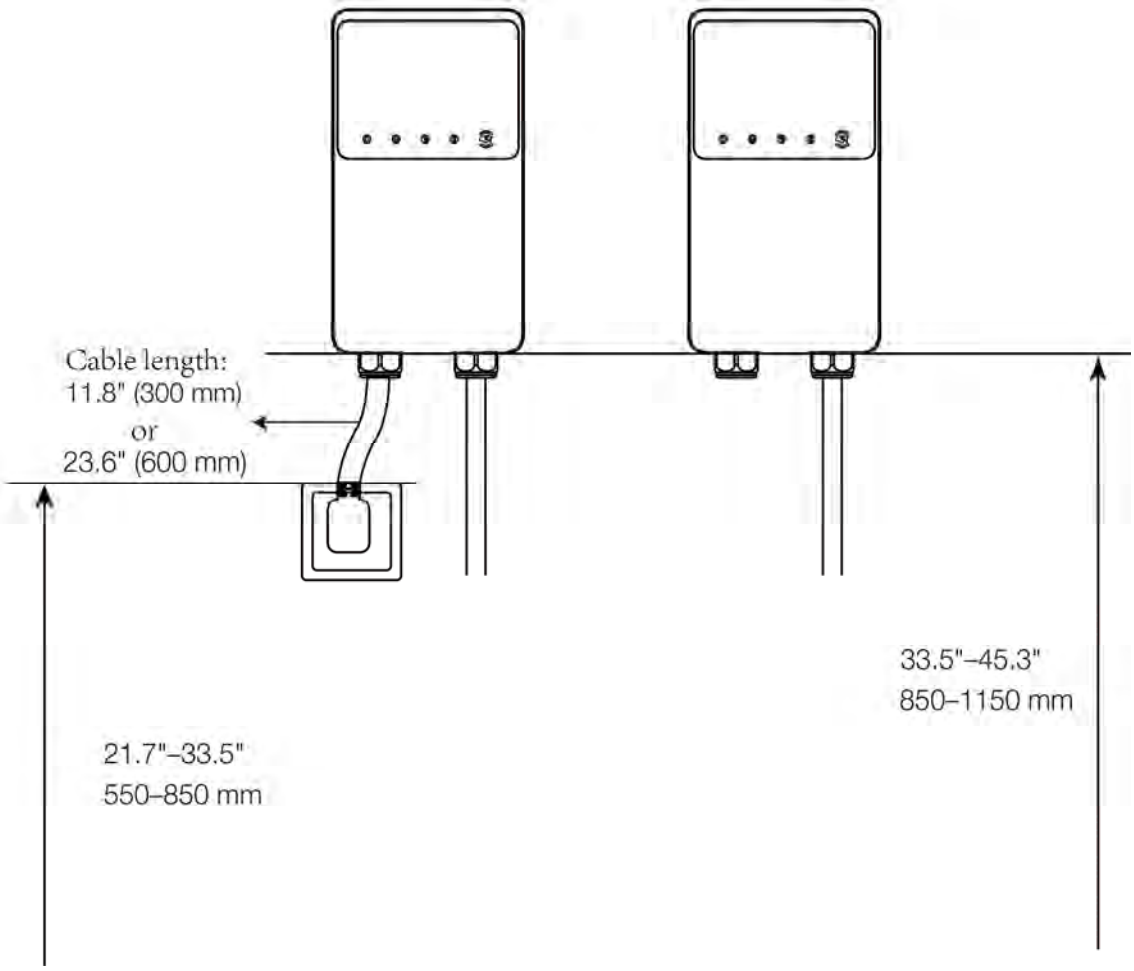

NOTE

The NEMA cable's length can be 11.8" (300 mm) or 23.6" (600 mm) depending on the product you receive.

3.3 NEMA Plug-in Outlet

This section introduces how to install a NEMA outlet if you do not have one already.

WARNING

Switch off the circuit breaker of the electrical outlet before installing the charger.

If you already have a NEMA outlet, ensure that it complies with local electrical codes and has a designated circuit breaker and electrical wiring that are dimensioned appropriately.

IMPORTANT

When installing a NEMA 14-50 outlet, ensure that the ground pin is facing up as shown as per the diagram.

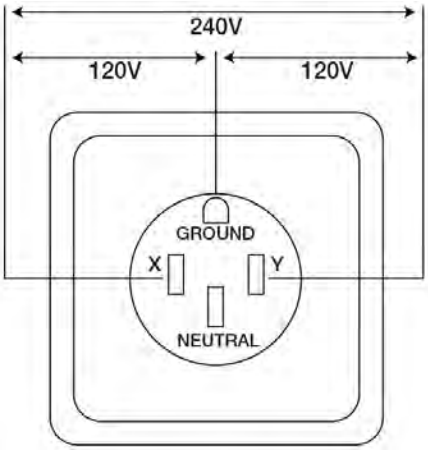

NEMA 14-50P

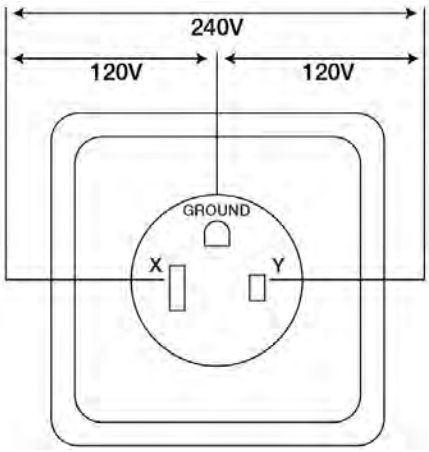

NEMA 6-50P

- Ensure you have the correct permits for this electrical installation.
- The NEMA outlet must be placed on the left side of the charger.

CAUTION

To reduce the risk of fire, connect only to a circuit with a branch circuit over-current protection of 50 A in accordance with ANSI/NFPA 70 (US) CSA C22.1 (Canada).

3.4 Installing the Charger

3.4.1 NEMA Plug-in Installation

DANGER

Risk of shock. Turn off the power to the outlet at the circuit breaker until the installation is completed.

STEP 1

To find the ideal mounting height of the charger:

1. Find the wall stud nearest to the NEMA outlet using a wall stud finder. Draw a vertical line of approximately 20” (50 cm) in line with the wall stud.

   Alternatively, you may find a suitable location on a solid wall.
2. Plug the NEMA cable into the outlet, and position the charger centered on the vertical line. Ensure that the NEMA cable has a slight curve and is not stretched.
3. Mark a horizontal line at the bottom of the charger.
4. Unplug the charger.

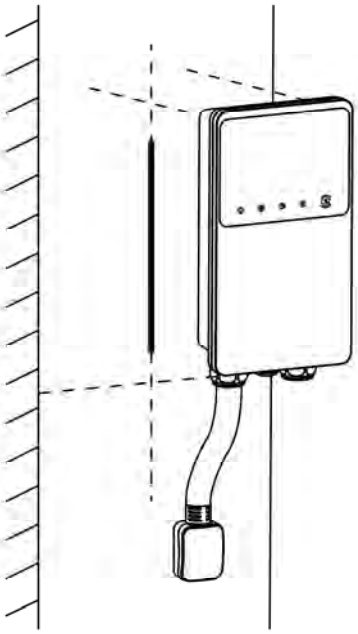

STEP 2

Place the wall dock with the bottom edge aligned with the horizontal line and the center holes aligned with the vertical line. Mark the two lower mounting holes (**A**) and remove the wall dock.

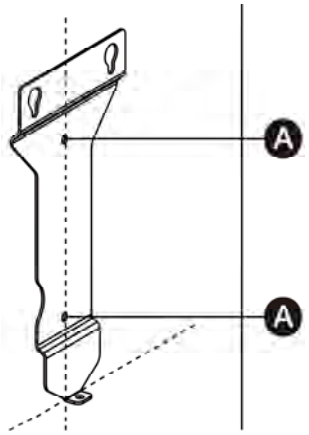

STEP 3

1. Drill two 5/16" holes and insert two 5/16" diameter wall anchors into the holes.
2. Attach the wall dock to the mounting location by inserting two M6 x 50 screws (**B**) into the lower mounting holes. Tighten the screws using the PH2 screwdriver (not included in the package).

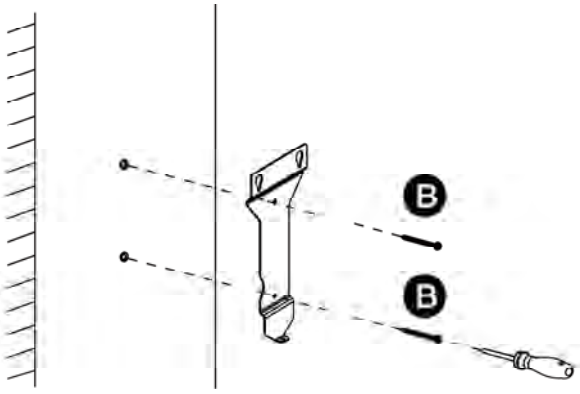

STEP 4

Attach the charger to the wall dock by inserting the mounting screws (**D**) on the back of the charger into the two upper mounting holes (**C**). Slide the charger downwards to engage the screws.

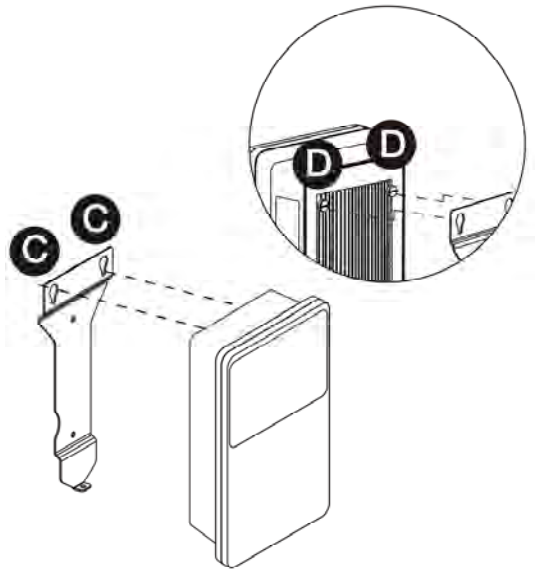

STEP 5

Screw the M5 x 12 screw into the hole at the bottom of the charger and tighten the screw to secure the charger using the T25 Torx screwdriver.

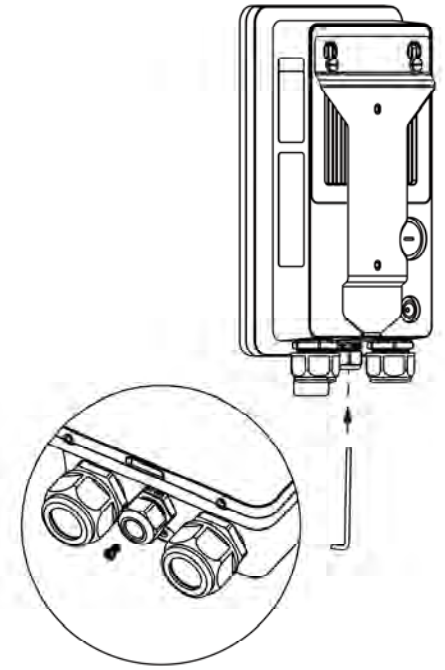

3.4.2 Hardwired Installation

The MaxiCharger AC Elite (residential) supports both rear entry and bottom entry wiring. Choose the most appropriate wiring entry for your charger based on the placement of the wiring.

IMPORTANT

- Both the rear entry and bottom entry locations are on the left side of the charger. Ensure that you mount your charger in a location where the power supply wiring can be easily accessed on the left side.
- The rear entry cables should be put through the cable inlet holes prior to mounting the charger to the wall dock.

Placement

1. Find the wall stud nearest to and on the right side of the power supply wiring using a wall stud finder.

   Alternatively, you may find a suitable location on a solid wall.

2. Draw a vertical line of approximately 20" (50 cm) in line with the wall stud at the approximate height of your mounting.

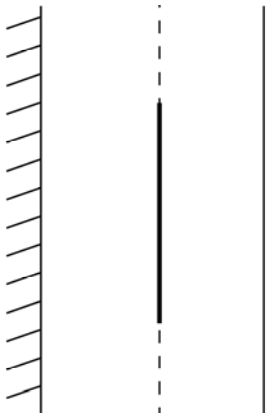

3. Place the wall dock with the center holes aligned with the vertical line. Mark the two lower mounting holes (**A**) and remove the wall dock.

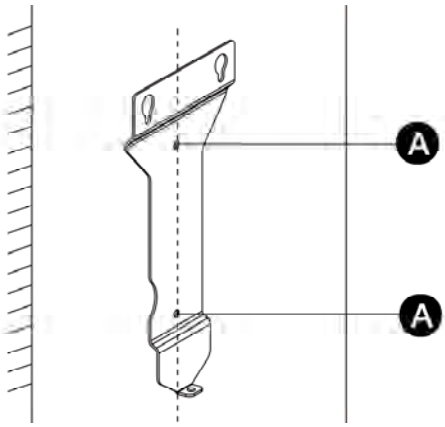

4. For rear entry wiring, mark the cable exit where the AC input cable will come out from the wall. Ensure that the cable exit matches the wall dock notch as per the diagram.

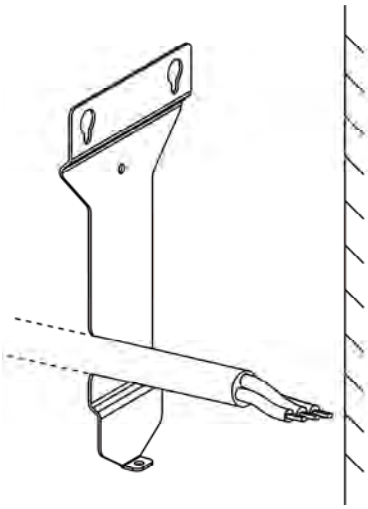

Mounting the Wall Dock

1. Drill two 5/16" holes and insert two 5/16" diameter wall anchors into the lower mounting holes.

2. Attach the wall dock to the mounting location by inserting two M6 x 50 screws (**B**) into the lower mounting holes. Tighten the screws using the PH2 screwdriver (not included in the package).

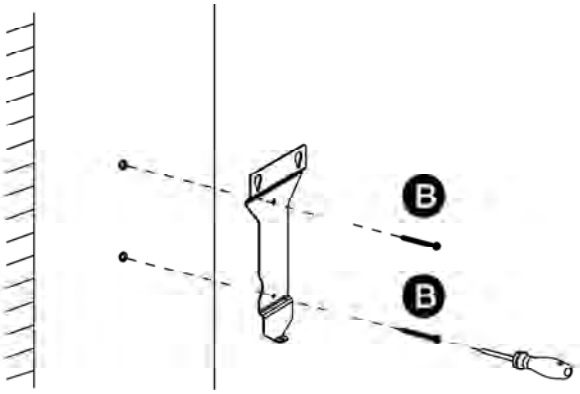

Mounting the Charger

Refer to Step 4 and Step 5 on page 13 to mount the charger.

Removing the Covers

1. Remove the two screws (**E**) at the bottom of the charger with the T10 Torx screwdriver. Then remove the faceplate from the middle of the clasp (**F**). **Set them aside**.

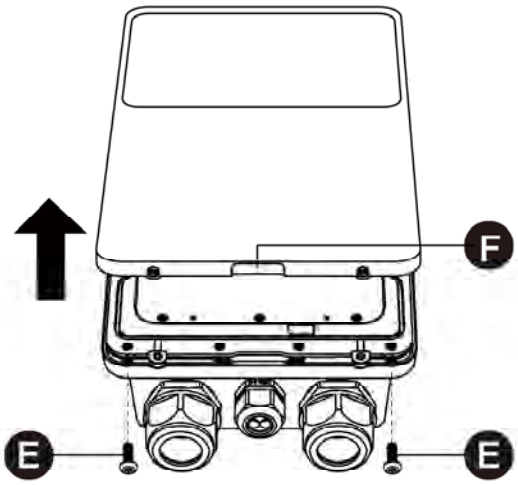

2. Unscrew the eleven screws using the T10 Torx screwdriver. **Set the screws aside**.

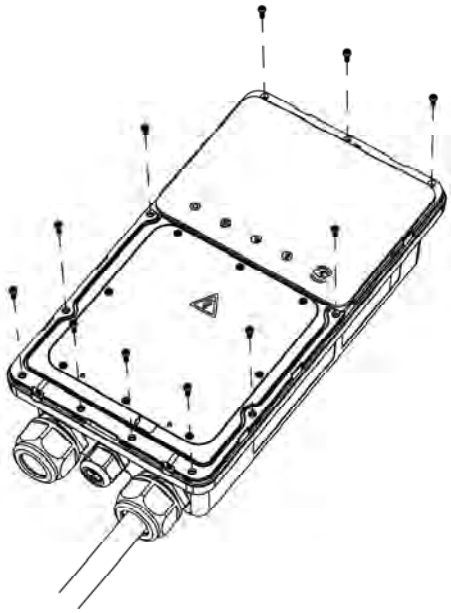

3. Press the button (**G**) to unplug the cables, and then remove the middle cover. **Set them aside**.

4. Remove the two screws on the left strain relief (**H**) with a Phillips screwdriver and remove it. **Set them aside**.

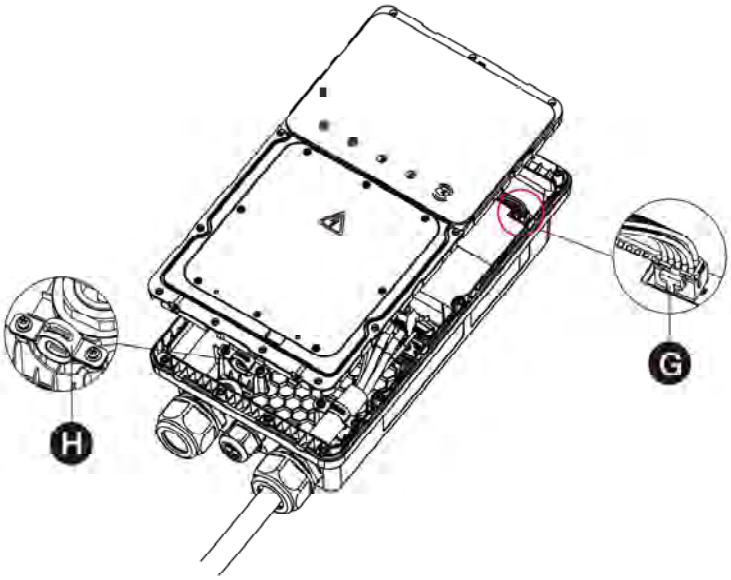

3.5 Power Supply Wiring

IMPORTANT

- Use copper conductors with the maximum wire size of 6 AWG (16 mm²).
- Ensure that the screws for the terminal blocks are properly tightened.
- Ensure that there is no copper wire or debris left inside of the charger before switching on the electrical power to the charger.

Removing the NEMA Cable (Optional)

In case you need to replace the NEMA cable with a Hardwire, remove the NEMA cable by loosening the terminal screws as per the diagram. Then loosen the cable gland and pull the NEMA cable out.

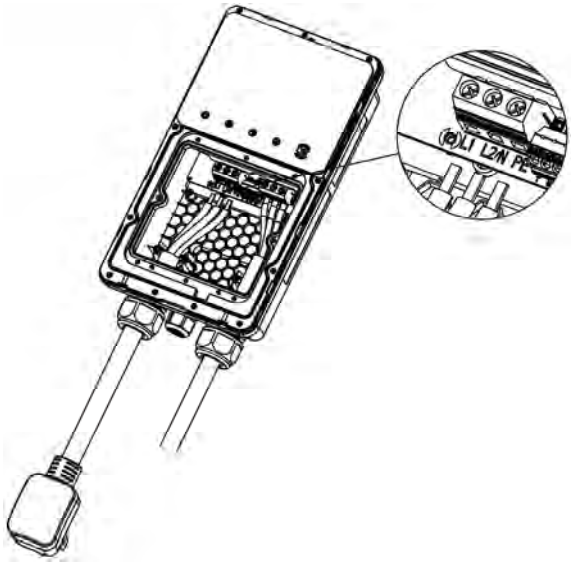

Step 1

Rear Entry

1. Remove the rear entry power conduit plug from the charger and replace it with the 3/4” conduit fitting (**I**, not included in the package). Remove the lock nut from the conduit fitting and **set it aside**.
2. Insert the AC input cable into the conduit fitting and attach the conduit fitting to the charger.

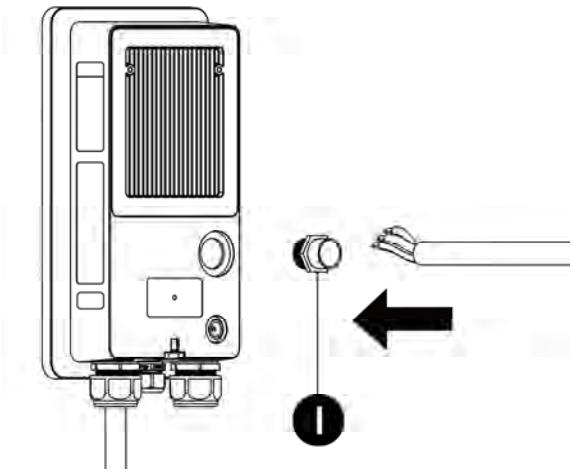

3. Screw the lock nut (**J**) into the conduit fitting.

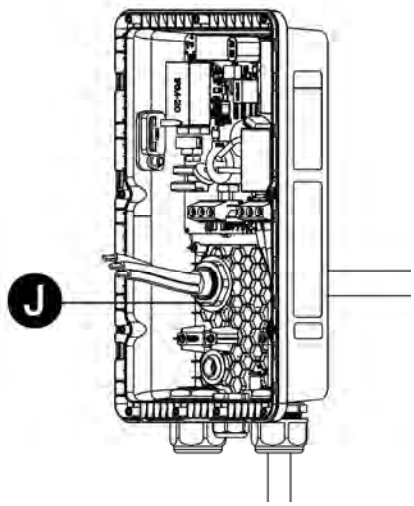

4. Remove the lower-left cable gland and install the bottom entry power conduit plug (**K**) to the charger.

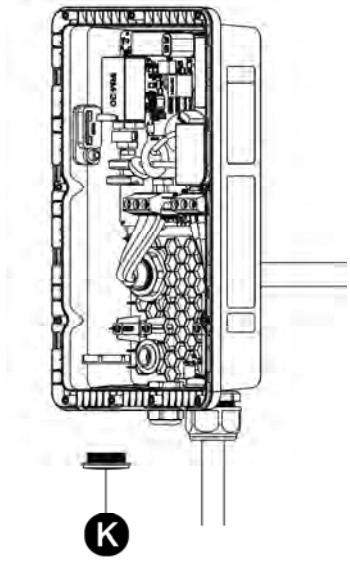

Bottom Entry

Loosen the left cable gland and insert the AC input cable into the inlet hole.

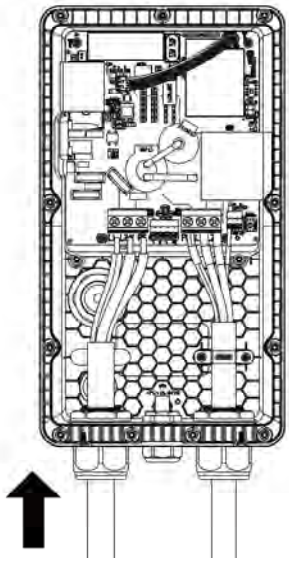

Step 2

1. Strip the wires to 1/2" (12 mm).
2. Connect the wires (L1, L2, and Ground) as per the diagram and tighten each connector screw to 17.7 in·lbs (2 N·m).
3. **For bottom entry:** Reinstall the left strain relief by inserting and tightening the two screws. Then tighten the left cable gland.
4. Reconnect the cables which was unplugged when removing the middle cover.
5. If the connection to the Ethernet cable and/or RS485 cables (see Section 3.6 and 3.7) are not needed, reinstall the faceplate and middle cover and tighten the screws.

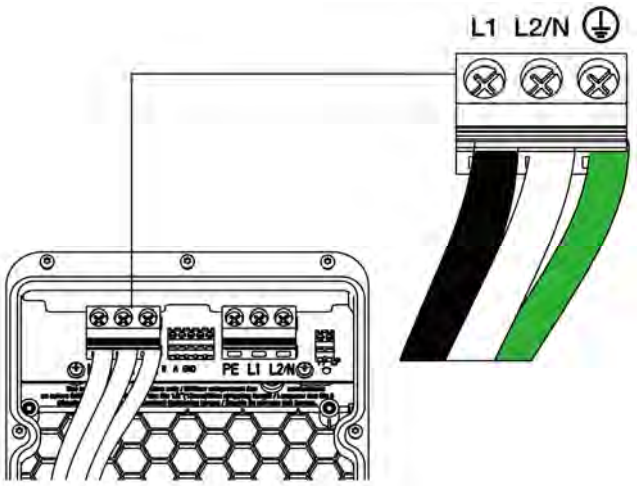

3.6 Connecting the Ethernet Cable

Step 1

Rear Entry

1. Pierce the rubber grommet and put the Ethernet cable (**L**) through it.
2. Make a RJ45 plug and connect it with the Ethernet cable.

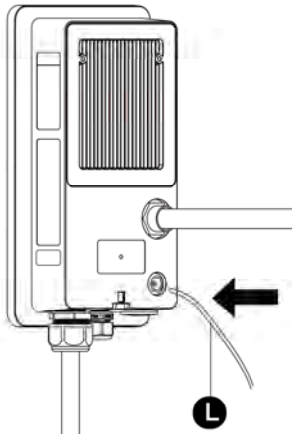

Bottom Entry

Put the Ethernet cable with the RJ45 plug through the bottom Ethernet cable port (**M**).

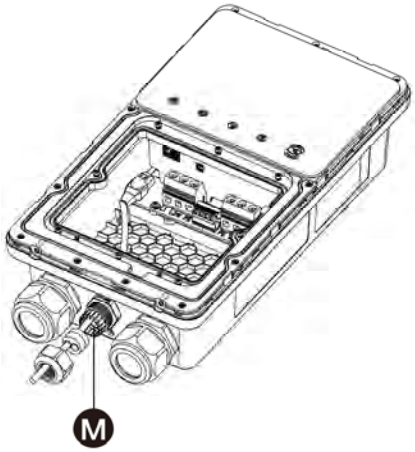

Step 2

Plug the cable into the RJ45 port as shown.

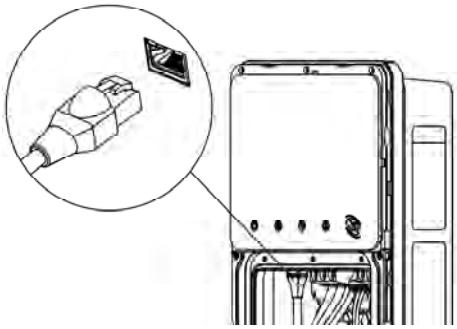

3.7 RS485 Cable Wiring (Optional)

If you need to connect the RS485 cables, insert the cables through the bottom Ethernet cable port first. Then connect the cables to the RS485 port as specified on the terminal block, respectively.

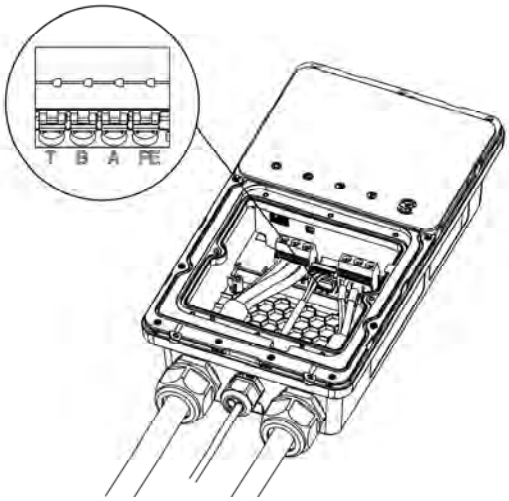

3.8 Adjusting the Rated Current

The MaxiCharger AC Elite (residential) allows you to manually set a lower maximum current using a current selector when installing your charger on a circuit rated lower than the maximum rating for your charger.

1. Remove the covers and locate the current selector.
2. Use a flathead screwdriver to set the rotary switch to the appropriate position per the table below.
3. When the current of your charger is set lower than the maximum rating, choose the correct current value from the Amperage Labels and affix it over the existing label on the charger.

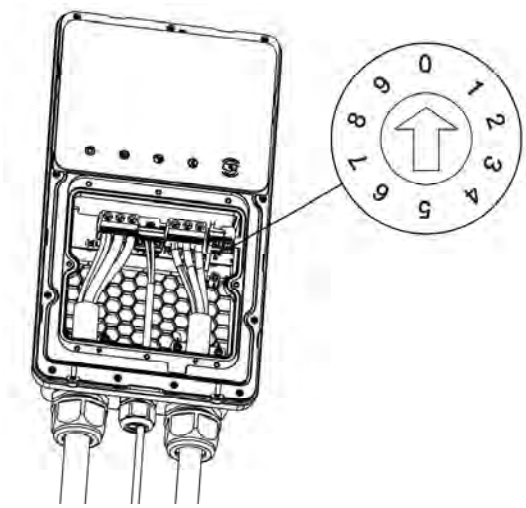

Position	Amperage (A)	Circuit Breaker Rating
0	Not in Use	N/A
1	16	20
2	24	30
3	32	40
4	40	50
5	48	60
6	50	70
7	Not in Use	N/A
8	Not in Use	N/A
9	Not in Use	N/A

NOTE

- When the rotary switch is at 0, 7, 8 or 9, the corresponding amperage will be 16, 50, 50, and 50, respectively.
- The maximum current is limited by the power rating of a charger as follows:
  - For 9.6 kW model: 40 A
  - For 12 kW model: 50 A

CAUTION

To reduce the risk of fire, only connect your charger to a circuit with a branch circuit over-current protection of 125% of the selected maximum amperage setting of the device in accordance with ANSI/NFPA 70 (US) CSA C22.1 (Canada).

3.9 Installing the Holster

NOTE

- The procedures below are only applicable to the separate holster model.
- Place the holster on a location where no tension is applied to the charging cable.

1. Install the holster on a vertical wall stud or similar solid wall to ensure a secure mounting.
2. Place the wall dock on the wall and level it using a spirit level.
3. Mark the three mounting holes (**A**) with a pencil and drill three 5/16" holes.
4. Insert three 5/16" diameter wall anchors (**B**) into the holes.
5. Attach the wall dock to the mounting location by inserting three M6 x 50 screws (**C**) into the holes. Tighten the screws using the PH2 screwdriver (not included in the package).

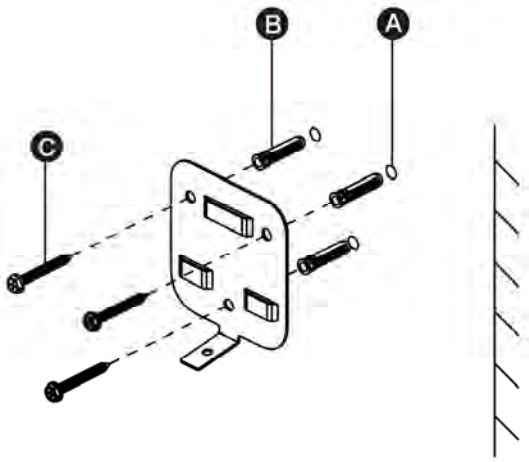

6. Position the holster to fit the grooves (**D**) of the wall dock. Ensure the installation is secure.
7. Insert the M5 x 12 screw (**E**) into the hole at the bottom of the holster and tighten it using the T25 Torx screwdriver.
8. Drape the charging cable over the top of the charger or holster and dock the EV connector in it.

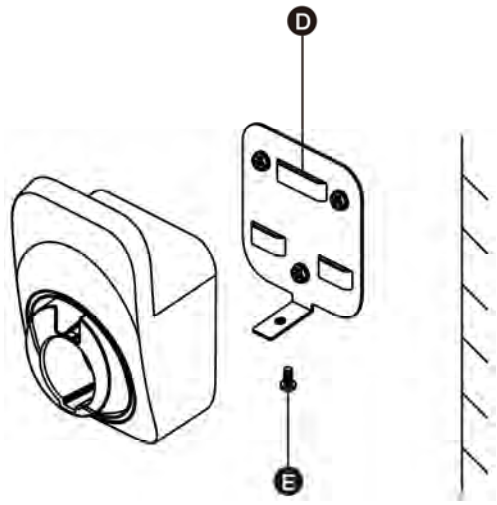

4 Operation

4.1 Powering on

If you have installed a NEMA plug-in model, plug it into the outlet.

For all models, once all electrical connections have been safely made, switch on the power to the circuit from the circuit breaker and wait for the power supply to come on. There will be a series of self-check starts, making sure that the charger works correctly and safely. The power LED should illuminate green. If a recoverable error is detected, the charging LED illuminates yellow; if the error cannot be recovered, it illuminates red.

WARNING

Be careful when you work with electricity.

4.2 Adding Your Charger

➢ **To add your charger**

1. Scan the QR code below to download the Autel Charge app to your mobile device from the Google Play or App Store. For iOS users, you will be redirected to the App Store; for Android users, you will be redirected to the Google Play.

GET IT ON Google Play

Download on the App Store

2. Open the Autel Charge app on your mobile device, and log in with your phone number or email. If you do not yet have an account, register with your phone number first.

3. Scan the QR code or enter the serial number and PIN code, which can be all found on the Quick Reference Guide, to add the charger.

4. Follow the on-screen instructions to connect your charger via Bluetooth and connect it to the Internet. Then choose a desired function to start.

4.3 Start Charging

1. Remove the connector from the holster.
2. Plug the connector into the EV charging port.
3. Choose one of the following ways to start a charge session:
   - If the Auto Start function is enabled in the Autel Charge app, the charger will automatically start charging once the connector is properly connected.
   - Use the Autel Charge app by tapping **Start** on the Charge screen.
   - If you have set a charging schedule in the Autel Charge app, the charger will initiate a charge session automatically as scheduled.
   - If the RFID function is enabled, tap your RFID card on the RFID reader.

NOTE

Ensure your EV is charging. The charging LED on the charger should be flashing green. If you suspect the vehicle is not charging properly, try reconnecting the charging cable or contact customer support.

4.4 Stop Charging

NOTE

- If you disconnect the EV charging cable during the charge session, the charger automatically disconnects the power supply. This stops all charging operations.
- When your vehicle is fully charged, the charger will automatically disconnect the power supply.

1. To stop charging, you can choose either of the following two ways:
   - Wait for the charge session to end and no further actions are required in the case of scheduled charging or Auto Start.
     - The charging LED will illuminate solid green.
     - The Autel Charge app displays that your EV is fully charged.
   - End the charge session by tapping **Stop** on the Charge screen. Or, if the RFID function is enabled, tap the RFID card on the RFID reader again.
2. Unplug the connector from your EV and return it to the holster.

5 Troubleshooting and Service

5.1 Troubleshooting Table

Item	Problems	Solutions
1	The charger is successfully added, but the Bluetooth connection fails.	Check whether the QR code on the charger is consistent with the QR code on the Quick Reference Guide. If so, make sure the Bluetooth is enabled on your mobile device; if not, contact customer support.
2	The charge session does not start as scheduled.	Do not insert the connector into your EV charging port before setting up a charging schedule for the first time. Insert the EV charging cable after the schedule is set up.
3	Over-voltage	Use the multimeter to check whether the voltage on the power input is too high. If the result is greater than or equal to 115 % of the rated voltage (276 V), contact local power grid company.
4	Under-voltage	Use the multimeter to check whether the voltage on the power input is not sufficient. If the result is less than or equal to 70 % of the rated voltage (161 V), contact local power grid company.
5	Ground fault	Ensure the charger is grounded correctly.
6	Power failure	Ensure the switch to the circuit breaker is on.
7	Over-heating	● Check whether the EV charging cable is securely connected. ● Ensure the operating temperature is within the specified range on the product label. ● Stop charging. Restart charging until it is within the operation temperature range.
8	Residual current detected	Unplug the vehicle and plug in again. If the problem persists, contact customer support.
9	Bluetooth communication failure	● Ensure the Bluetooth is enabled on your mobile device and the charger is powered on and operating properly. ● Forget the charger in the Bluetooth settings on your mobile device and pair the charger to your device via Bluetooth again. ● If the problem persists, contact customer support.
10	Update failure via Bluetooth	● Make sure the charger is in idle status. ● Make sure the Bluetooth connection is working properly. ● If the problem persists, contact customer support.
11	Internet connection fails	● Try to connect another device to the same Internet, verifying the Internet connection is working properly. ● If the problem persists, contact customer support.

6 Specifications

6.1 Specifications

Item	Description
AC Power Output Rating	● Maximum 9.6 kW (240 VAC @ 40 A model) ● Maximum 12 kW (240 VAC @ 50 A model)
AC Power Input Rating	208/240 VAC, 60 Hz, single phase @ 16 A, 24 A, 32 A, 40 A, 48 A, 50 A
Circuit Breaker Options (A)	20 A, 30 A, 40 A, 50 A, 60 A, 70 A (must be sized at 125% of the maximum load, e.g., 50 A breaker for 40 A output)
Input Wiring Scheme	Three wires: L1, L2, and Earth (no neutral)
Input Cord	● NEMA 6-50 ● NEMA 14-50 ● Hardwired
Connector Type	SAE J1772
Charging Cable Length	25 ft. (7.5 m)
Display	5 LEDs
Metering	Meter IC, ± 1 %
Ground Fault Detection	20 mA CCID with auto retry
Protection	Overcurrent, overvoltage, undervoltage, integrated surge protection
Connectivity	● Bluetooth ● Wi-Fi (2.4G, 802.11 b/g/n) ● Ethernet ● RS485
Card Reader	ISO 15693, ISO 14443
Communication Protocols	OCPP 1.6J **(Connection to third-party cloud platforms via OCPP is not supported.)**
Mounting	Wall-mounted or floor using a pedestal
Enclosure Ratings	NEMA 4X, indoor or outdoor installation (NEMA cable length: 300 mm or 600 mm)
Operating Temperature	-40 to 131 °F (-40 to 55 °C)
Storage Temperature	-40 to 158 °F (-40 to 70 °C)

Item	Description
Dimension (H x W x D)	● In-body holster version: 13.2” x 7.4” x 3.8” (336 x 187 x 97 mm) ● Separate holster version: 13.2” x 7.4” x 3.3” (336 x 187 x 85 mm)
Weight	● Hardwired model: about 14.8 lbs. (6.7 kg) ● NEMA plug-in model: about 15.4 lbs. (7 kg)
Safety and Compliance	NEC Article 625 and UL 916, UL 2594, UL2231-1, UL2231-2, UL 1998, CSA C22.1 Automatic reset feature is provided. **AVERTISSEMENT** Caractéristique de réarmement automatique incluse.
Codes and Standards	FCC Part 15 Class B, Energy Star, OpenADR2.0 B
Warranty	3 years
Model	● Maxi US AC W12-H ● Maxi US AC W10-N14-H ● Maxi US AC W10-N6-H ● Maxi US AC W12 ● Maxi US AC W10-N14 ● Maxi US AC W10-N6

6.2 Product Dimensions

In-Body Holster Model

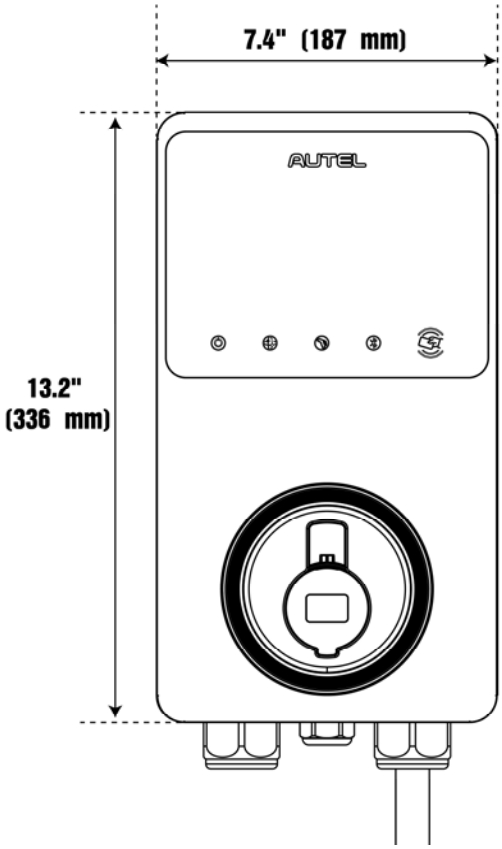

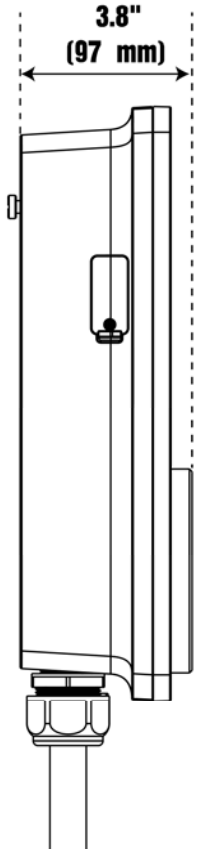

Separate Holster Model

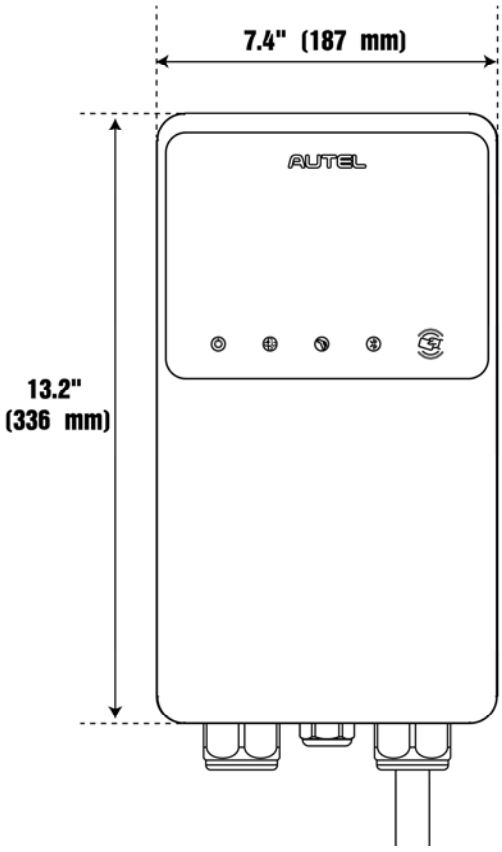

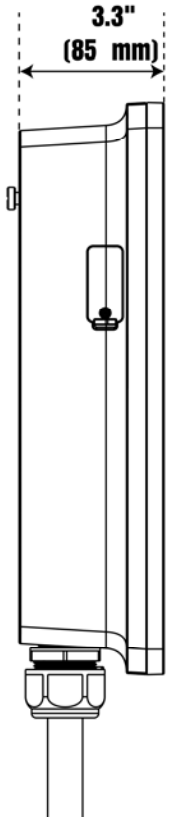

7 Compliance

FCC regulatory conformance：

This device complies with Part 15 of the FCC Rules. Operation is subject to the following two conditions:

(1) This device may not cause harmful interference.

(2) This device must accept any interference received, including interference that may cause undesired operation.

NOTE: This equipment has been tested and found to comply with the limits for a Class B digital device, pursuant to part 15 of the FCC Rules. These limits are designed to provide reasonable protection against harmful interference in a residential installation.

This equipment generates uses and can radiate radio frequency energy and, if not installed and used in accordance with the instructions, may cause harmful interference to radio communications. However, there is no guarantee that interference will not occur in a particular installation. If this equipment does cause harmful interference to radio or television reception, which can be determined by turning the equipment off and on, the user is encouraged to try to correct the interference by one or more of the following measures:

- Reorient or relocate the receiving antenna.

- Increase the separation between the equipment and receiver.

- Connect the equipment into an outlet on a circuit different from that to which the receiver is connected.

- Consult the dealer or an experienced radio/TV technician for help

NOTE: The manufacturer is not responsible for any radio or TV interference caused by unauthorized modifications to this equipment. Such modifications could void the user’s authority to operate the equipment.

RF Exposure

This equipment complies with FCC radiation exposure limits set forth for an uncontrolled environment. This equipment should be installed and operated with minimum distance of 20 cm between the radiator and your body. This transmitter must not be co-located or operating in conjunction with any other antenna or transmitter.

IC regulatory conformance:

This device complies with CAN ICES-3 (B)/NMB-3(B).

This device contains licence-exempt transmitter(s)/receiver(s) that comply with Innovation, Science and Economic Development Canada's licence-exempt RSS(s). Operation is subject to the following two conditions:

(1) This device may not cause interference.

(2) This device must accept any interference, including interference that may cause undesired operation of the device.

Cet appareil est conforme à la norme CAN ICES-3 (B)/NMB-3 (B).

Cet appareil contient des émetteurs / récepteurs exempt (s) de licence qui sont conformes aux RSS exemptes de licence d'Innovation, Sciences et Développement économique Canada. Son fonctionnement est soumis aux deux conditions suivantes:

(1) Cet appareil ne doit pas provoquer d'interférences.

(2) Cet appareil doit accepter toute interférence, y compris les interférences susceptibles de provoquer un fonctionnement indésirable de l'appareil.

RF Exposure

This equipment complies with IC radiation exposure limits set forth for an uncontrolled environment. This equipment should be installed and operated with minimum distance of 20 cm between the radiator and your body. This transmitter must not be co-located or operating in conjunction with any other antenna or transmitter.

Cet équipement est conforme aux limites d’ exposition aux rayonnements de la IC établies pour unenvironnement non contrôé. Cet équipement doit être installé et fonctionner à au moins 20cm de distance d’un radiateur ou de votre corps.

AUTEL®

www.autelenergy.com