项目	
库	
文件名	

重点校对项

1. 物料编码
2. 版面尺寸
3. 材质标注
4. 颜色标注
5. 客户型号
6. 产品名称
7. 产品参数
8. 电压功率
9. 单位符号
10. 认证标志
11. 回型标志
12. ROHS标志
13. 警语警语及字高
14. 控制面板及功能
15. 目录及页码

技术要求(版本号:B，2020-01)

1. 文字图案印刷颜色为：四色 ，印刷字体需清晰可见，文字不能粘到一起；
2. 该说明书的幅面大小为：127*178mm ，未注直线尺寸公差应符合GB/T1804-v；
3. 该说明书的装订方式为：钉装 ;[70P以下为钉装，70P以上为胶装（特殊要求除外）]
4. 说明书警语及认证标志应满足CE/UL标准，CE：警语部分大写字母高度不低于3mm，CE标志不低于5mm，WEEE标志不低于7mm；UL：大写字母字高不小于1/12”(2.11mm)，小写字母字高不小于1/16”(1.6mm)，“IMPORTANT SAFEGUARDS”，“SAVE THESE INSTRUCTIONS”等词，其字高不小于3/16”(4.8mm)，IMPORTANT SAFEGUARDS 必须在最前面。
5. 产品应符合QMG-J53.021《产品说明书技术条件》的有关要求。
6. 有ROHS指令要求的物料应符合美的企业标准QML-J11.006《产品中限制使用有害物质的技术标准》。

16161000A29408

标记	处数	更改文件号	签 字	日 期

制 图	刘灿	审 核	李艳
设 计	-----	标准化	古广君
校 对	-----	审 定	古广君
会 签	-----	日 期	20250305

电压力锅

说明书

图样标记		重量	比例
K		/	1:1

共 1 页 第 1 页

Instant Pot-MY-CSF8010WP (DUO CRISP AF 8) -0501

材料:封面封底105g铜版纸过UV油
内页70g双胶纸

广东美的生活电器制造有限公司

get started

INSTANT POT® **DUO® CRISP**
MULTI-COOKER + AIR FRYER

USER MANUAL

Instant®

Welcome

to your new Instant Pot Duo Crisp!

This Instant Pot® Duo® Crisp Multi-cooker + Air Fryer can help you cook healthy, delicious meals more easily and in less time. We hope you fall in love with Instant Pot cooking, and enjoy it in your kitchen for years to come.

Get started with your new Duo Crisp!

⚠WARNING

Before using your new appliance, read all instructions, including the Important Safeguards. **Failure to follow the safeguards and instructions may result in personal injury and/or property damage.**

CONTENTS

Important safeguards	2
What's in the box	8
Using your Duo Crisp	11
Status messages	13
Initial setup	16
Using the pressure cooker lid	24
Using the air fryer lid	26
Pressure Cook	27
Sauté	29
Slow Cook	31
Keep Warm	33
Air Fry	34
Roast	36
Bake	37
Broil	38
Dehydrate	39
Cleaning	40
Troubleshooting	42
Error codes	44
Product Specifications	45
Learn more	46
Warranty	47
Notes	49

⚠ IMPORTANT SAFEGUARDS

⚠WARNING

Failure to follow safety instructions may result in personal injury and/or property damage and may void your warranty.

READ ALL INSTRUCTIONS

Before using your new appliance, please read all instructions, including the Safety Information below. Keep this manual for reference.

Placement

- **DO** place the appliance on a countertop only. Always operate the appliance on a stable, non-combustible, level surface.
- **DO** make sure all parts are dry and free of food debris before placing the inner cooking pot on the cooker base.
- **DO NOT** place the appliance or power cord on or close to a gas or electric stovetop or oven. **NEVER** use the appliance on your stove.
- **DO NOT** use the appliance near water, an external heat source or flame.
- **DO NOT** use outdoors. Keep out of direct sunlight.
- **DO NOT** place on anything that may block the vents on the bottom of the appliance.

General Use

The removable inner cooking pot is extremely hot during use and can be extremely heavy when full of ingredients.

- **DO** use oven mitts when handling the inner cooking pot and removing accessories.
- **DO** place hot accessories on a heat-resistant surface or cooking plate.
- **DO** use care when lifting the cooking pot from the cooker base to avoid burn injury.
- **DO** use extreme caution when the cooking pot contains hot food, hot oil or other hot liquids.
- **DO** use only the pressure cooker lid or air fry lid that came with this Instant Pot multi-cooker. Using any other pressure cooker lids may cause personal injury and/or property damage.

112-0120-01_140-0021-01_IB_Duo-Crisp_6QT-8QT_US_Manual_R9-FINAL-04-18-2024.indd 2 4/19/24 11:32 AM

⚠WARNING

Failure to follow safety instructions may result in personal injury and/or property damage and may void your warranty.

- **DO NOT** use the appliance without the removable inner cooking pot installed.
- **DO NOT** touch the appliance's hot surfaces, or any accessories during or immediately after cooking because they will be hot. Only use the appliance's side handles for carrying or moving.
- **DO NOT** use this appliance for deep frying or pressure frying with oil.
- **DO NOT** move the appliance while it is in use and use extreme caution when disposing of hot grease.
- **DO NOT** allow children or persons with reduced physical, sensory or mental capabilities to operate this appliance. Close supervision is necessary when any appliance is used by or near children and persons with reduced physical, sensory or mental capabilities. Children should not play with this appliance.
- **DO NOT** use the appliance for anything other than household use. It is not intended for commercial use.
- **DO NOT** leave the appliance unattended while in use.

Pressure Cooking

This appliance cooks under pressure. Allow the appliance to depressurize naturally or release all excess pressure before opening. **Failure to follow these instructions may result in burns, personal injury and/or property damage.**

- **DO** make sure the appliance is properly closed before operating.
- **DO** check that the steam release valve is installed properly.
- **DO** use the pressure cooking lid when pressure cooking.
- **DO** turn the appliance off if steam escapes from the steam release valve and/or float valve in a steady stream for longer than 3 minutes. If steam escapes from the sides of the lid, turn the appliance off. Once steam stops, pressure is released and the cooker has cooled, carefully make sure the sealing ring is properly installed.
- **DO** ensure the sealing ring is in good condition and installed properly.
- **DO** check the steam release valve, steam release pipe, anti-block shield and float valve for clogging before use.
- **DO NOT** remove the pressure cooking lid with unprotected hands.
- **DO NOT** attempt to force the lid off the Instant Pot cooker base.

112-0120-01_140-0021-01_IB_Duo-Crisp_6QT-8QT_US_Manual_R9-FINAL-04-18-2024.indd 3 4/19/24 11:32 AM

⚠WARNING

Failure to follow safety instructions may result in personal injury and/or property damage and may void your warranty.

- **DO NOT** move the appliance when it is pressurized.
- **DO NOT** cover or obstruct the steam release valve and/or float valve with cloth or other objects.
- **DO NOT** attempt to open the appliance until it has depressurized, and all internal pressure has been released. Attempting to open the appliance while it is still pressurized may lead to sudden release of hot contents and may cause burns, personal injury and/or property damage.
- **DO NOT** place your face, hands or exposed skin over the steam release valve or float valve when the appliance is in operation or has residual pressure, and do not lean over the appliance when removing the lid.

Overfill During Pressure Cooking

Overfilling may cause a risk of clogging the steam release pipe and valve, developing excess pressure.

- **DO NOT** fill the inner cooking pot over the line labeled 'PC MAX' or 'Max PC Fill'.
- **DO NOT** fill the inner cooking pot over the line labeled '1/2' when cooking foods that expand during cooking such as rice, dried beans or dried vegetables.
- **DO** be aware that certain foods, such as applesauce, cranberries, pearl barley, oatmeal or other cereals, split peas, noodles, macaroni, rhubarb, or spaghetti can foam, froth and sputter, and clog the steam release pipe and valve. **DO NOT** fill the inner cooking pot over the line labeled '1/2' when cooking these foods.
- **DO NOT** place oversized foods into the inner cooking pot as they may cause risk of fire, personal injury and/or property damage.

Air Frying Cautions

When the air fryer is in operation, hot air is released through the air vents. Keep your hands and face away from the air vents and take extreme caution when removing hot accessories from the appliance. **Failure to do so may result in personal injury and/or property damage.**

While cooking, the internal temperature of the appliance reaches several hundred degrees. To avoid personal injury, never place unprotected hands inside the appliance until it has cooled to room temperature.

112-0120-01_140-0021-01_IB_Duo-Crisp_6QT-8QT_US_Manual_R9-FINAL-04-18-2024.indd 4 4/19/24 11:32 AM

⚠WARNING

Failure to follow safety instructions may result in personal injury and/or property damage and may void your warranty.

- **DO** use the included inner cooking pot when using the air fryer lid.
- **DO** use caution when using cooking containers made of materials other than metal or glass. Failure to do so may result in personal injury, fire and/or property damage.
- **DO** use extreme caution when removing the inner cooking pot, air fry basket or cooking tray, or disposing of hot cooking residue.
- **DO NOT** use a ceramic-coated or stoneware pot for air frying.
- **DO NOT** cover or block the vents while the air fryer is operating. Doing so will prevent even cooking and may cause damage to the appliance. Leave at least 5 in / 13 cm of space around the air fryer when in use.
- **DO NOT** operate the appliance on or near combustible materials such as tablecloths and curtains.
- **DO NOT** use this appliance for deep frying foods.
- **DO NOT** pour oil into the cooking container. Using excess cooking oil could cause fire and result in personal injury and/or property damage.
- **DO NOT** use pressurized, aerosol oil sprays, since they contain chemicals that can damage the non-stick finish of the cooking tray. If needed, spray food lightly with oil with a high smoke point (such as refined avocado oil, safflower oil, refined sunflower oil, refined peanut oil, canola oil and refined coconut oil) from a non-aerosol, pump-style cooking spray before placing in the basket.
- **DO NOT** use this appliance for making popcorn.
- Should the unit emit black smoke during use, press **Cancel** and unplug the appliance immediately. Wait for smoking to stop before removing the lid, then clean thoroughly. For further information refer to 'Troubleshooting'.

Overfill During Air Frying

- **DO NOT** overfill the unit when air frying. Overfilling may cause food to contact the heating element, which may result in personal injury, fire, and/or property damage. When using an air fry tray or cooking tray, only place food in a single layer and do not stack. When using an air fry basket, do not fill more than 3/4 full. Best air frying results require air circulating through the food.
- **DO NOT** allow food to contact the heating element.

112-0120-01_140-0021-01_IB_Duo-Crisp_6QT-8QT_US_Manual_R9-FINAL-04-18-2024.indd 5 4/19/24 11:32 AM

⚠WARNING

Failure to follow safety instructions may result in personal injury and/or property damage and may void your warranty.

Accessories

- **DO** use only accessories or attachments authorized by Instant Pot Brands. The use of parts, accessories or attachments not recommended by the manufacturer may cause a risk of electric shock or other personal injury, fire and/or property damage.
- **DO** use only an authorized Instant Pot inner cooking pot to reduce the risk of pressure leakage.
- **DO** only replace the sealing ring with an authorized Instant Pot sealing ring to prevent personal injury, property damage, and/or damage to the appliance.
- **DO NOT** use the included accessories in a microwave, toaster oven, convection or conventional oven, on a ceramic, electric or gas cooktop, or with an outdoor grill.

Care and Storage

- **DO** let the appliance cool to room temperature before cleaning or storage.
- **DO NOT** store any materials, other than the inner cooking pot, in the cooker base when not in use.
- **DO NOT** place any combustible materials in the cooker base, such as paper, cardboard, plastic, Styrofoam or wood.

Power Cord

A short power-supply cord is used to reduce the hazards resulting from grabbing, entanglement or tripping. **WARNING:** Hot spilled food can cause serious burns.

- **DO** keep appliance and power cord away from children.
- **DO NOT** let the power cord hang over edges of tables or counters.
- **DO NOT** let the power cord touch hot surfaces or open flame, including a stovetop.
- **DO NOT** use below-counter power outlets.

This appliance has a 3-prong grounding plug. To reduce the risk of electric shock:

- **ONLY** plug the power cord into a grounded electrical outlet.
- **DO NOT** remove the grounding prong on the electrical plug.
- **DO NOT** use with extension cords, power converters or adapters, timer switches or separate remote-control systems.

112-0120-01_140-0021-01_IB_Duo-Crisp_6QT-8QT_US_Manual_R9-FINAL-04-18-2024.indd 6 4/19/24 11:32 AM

⚠WARNING

If the unit includes a detachable power cord:

- To connect, always attach the power cord to the appliance first, then plug the power cord into the wall outlet.

Electrical Cautions

The cooker base contains electrical components that are an electrical shock hazard. **Failure to follow these instructions may result in electric shock and/or death.**

To protect against electrical shock:

- To disconnect, select **Cancel**, then remove plug from power source. Always unplug when not in use, as well as before adding or removing parts or accessories, and before cleaning. To unplug, grasp the plug and pull from the outlet. **NEVER** pull from the power cord.
- **DO** regularly inspect the appliance and power cord for any signs of damage or fraying.
- **DO NOT** operate the appliance if the power cord or plug is damaged, or after the appliance malfunctions or is dropped or damaged in any manner. For assistance, contact Consumer Care by email at **support@instantpot.com**.
- **DO NOT** attempt to repair, replace or modify components of the appliance, as this may cause electric shock or other personal injury, fire and/or property damage, and will void the warranty. For assistance, contact Consumer Care by email at **support@instantpot.com**.
- **DO NOT** tamper with any of the safety mechanisms, as this may result in personal injury and/or property damage.
- **DO NOT** put liquid or food of any kind into cooker base without the inner cooking pot.
- **DO NOT** immerse the power cord, plug or the appliance in water or other liquid.
- **DO NOT** clean the appliance by rinsing it under a faucet.
- **DO NOT** use the appliance in electrical systems other than 120 V ~ 60 Hz for North America.

SAVE THESE INSTRUCTIONS

⚠WARNING

Failure to follow safety instructions may result in personal injury and/or property damage and may void your warranty.

112-0120-01_140-0021-01_IB_Duo-Crisp_6QT-8QT_US_Manual_R9-FINAL-04-18-2024.indd 7 4/19/24 11:32 AM

WHAT'S IN THE BOX

Pressure Cooker Lid

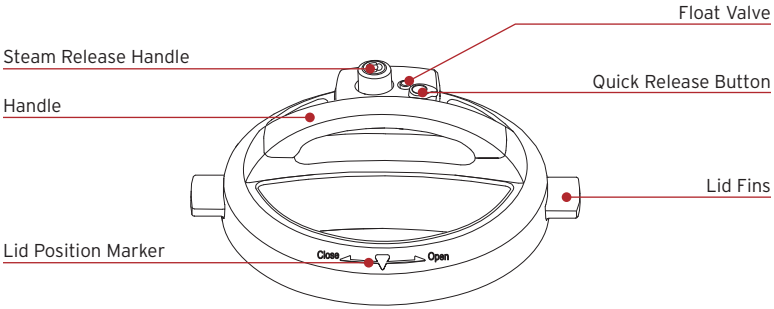

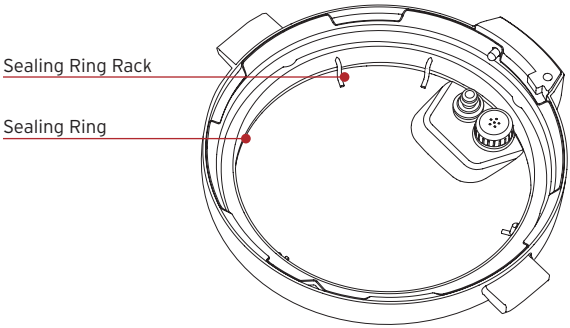

Illustrations are for reference only and may differ from the actual product.

112-0120-01_140-0021-01_IB_Duo-Crisp_6QT-8QT_US_Manual_R9-FINAL-04-18-2024.indd 8 4/19/24 11:32 AM

Air Fryer Lid

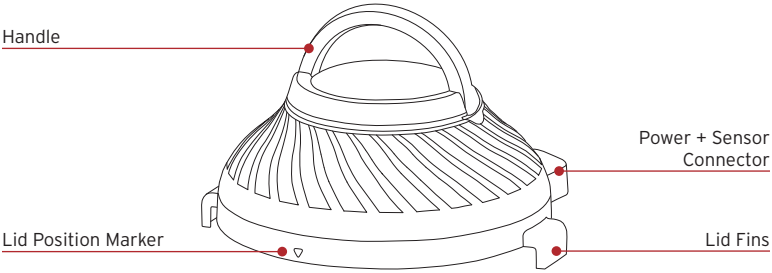

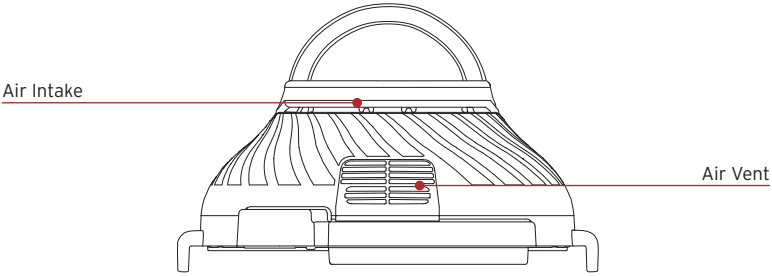

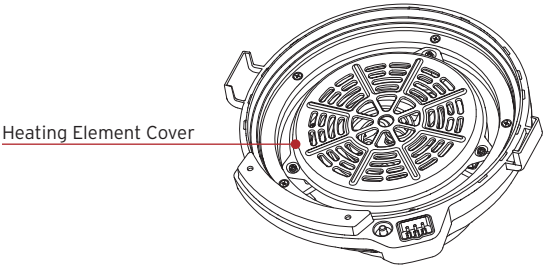

Illustrations are for reference only and may differ from the actual product.

112-0120-01_140-0021-01_IB_Duo-Crisp_6QT-8QT_US_Manual_R9-FINAL-04-18-2024.indd 9 4/19/24 11:32 AM

Stainless Steel Inner Cooking Pot

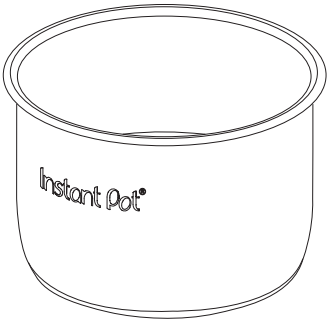

Cooker Base

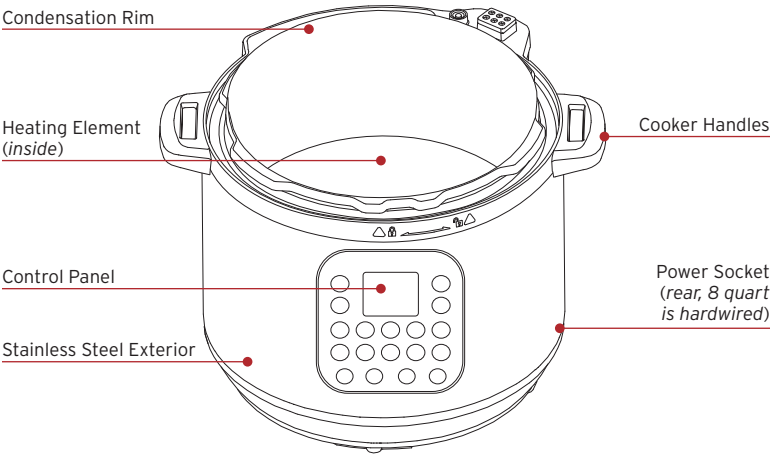

Illustrations are for reference only and may differ from the actual product.

112-0120-01_140-0021-01_IB_Duo-Crisp_6QT-8QT_US_Manual_R9-FINAL-04-18-2024.indd 10 4/19/24 11:32 AM

Accessories

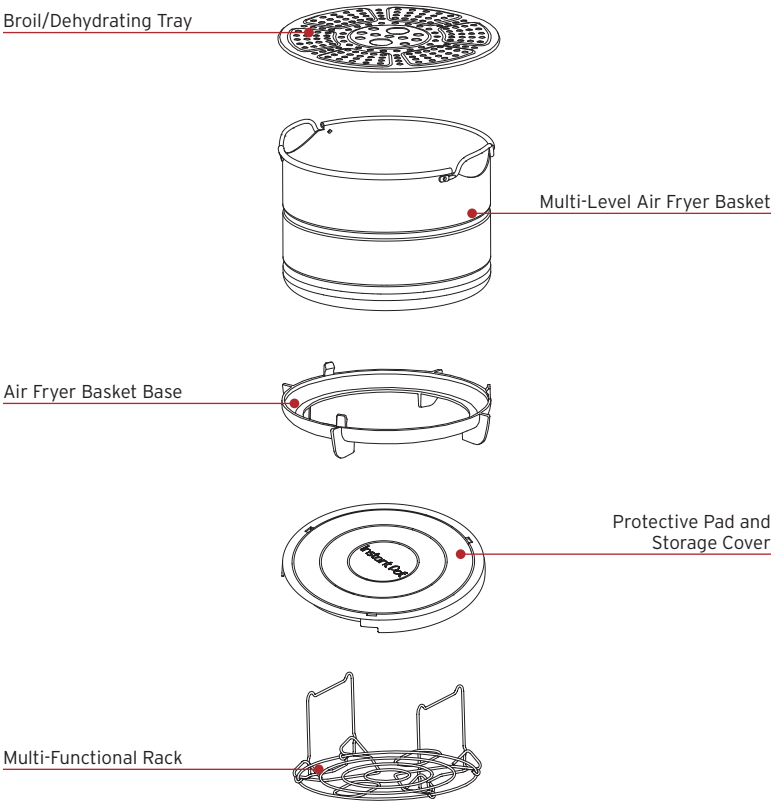

Illustrations are for reference only and may differ from the actual product.

Remember to recycle!

We designed this packaging with sustainability in mind. Please recycle everything that can be recycled where you live.

112-0120-01_140-0021-01_IB_Duo-Crisp_6QT-8QT_US_Manual_R9-FINAL-04-18-2024.indd 11 4/19/24 11:32 AM

USING YOUR DUO CRISP

Control panel

We've designed the control panel to be simple to use and easy to read.

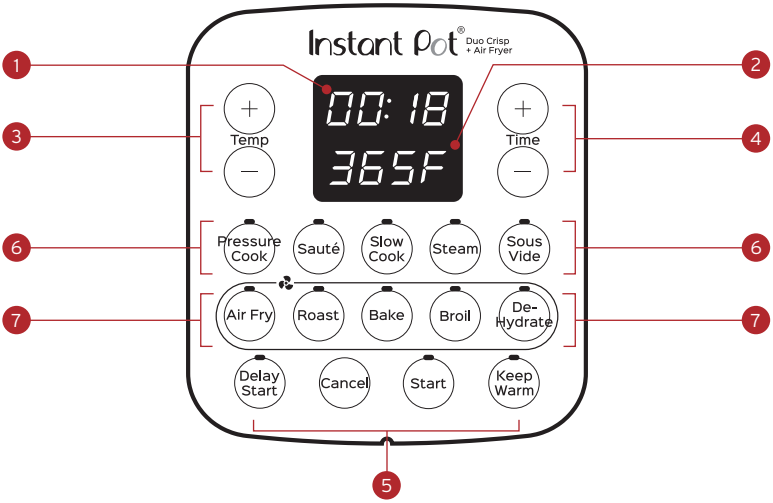

1. Time
   - Cooking time
   - Delay Start time
   - Keep Warm time
2. Temperature/Pressure
   - Cooking temperature
   - Low or High pressure
3. Temperature Control
   - Increase or decrease cooking temperature
4. Time Control
   - Increase or decrease cooking time
5. Smart Program Settings
   - Start
   - Keep Warm On/Off
   - Delay Start On/Off
   - Cancel
6. Pressure and Slow Cooking Smart Programs
   - Light shows the active Smart Program
7. Air Frying Smart Programs
   - Light shows the active Smart Program

112-0120-01_140-0021-01_IB_Duo-Crisp_6QT-8QT_US_Manual_R9-FINAL-04-18-2024.indd 12 4/19/24 11:32 AM

STATUS MESSAGES

The control panel shows information you need to know when using your Instant Pot Duo Crisp.

OFF	Standby mode
On	Preheat mode
Lid	Lid not properly secured or missing
05:20	Time • Smart Program: cooking time remaining • Delay Start: time until Smart Program starts • Keep Warm: time food has been warming
Hot	Sauté Smart Program is ready to add food
End	Smart Program ended (Keep Warm is off)
Food burn	Overheating: see Troubleshooting
C*	Error: see Error Codes

112-0120-01_140-0021-01_IB_Duo-Crisp_6QT-8QT_US_Manual_R9-FINAL-04-18-2024.indd 13 4/19/24 11:32 AM

Turning the sound On/Off

Turn sound on

When in Standby mode, press and hold **+** button until display shows **S On**.

Turn sound off

When in Standby mode, press and hold **–** button until display shows **SOFF**.

Audible safety alerts (beeps) cannot be turned off.

Choosing the temperature scale

You can choose to show cooking temperature in either Fahrenheit or Celsius.

1. When in Standby mode, press and hold **Temp +** until the display shows °F or °C.

   Cooking temperature will now show in the scale you chose.

Delay the start of cooking

You can set a Delay Start timer for a minimum of 10 minutes or a maximum of 24 hours. Delay Start is available for the Pressure Cook, Sauté, Slow Cook, Steam and Sous Vide Smart Programs, but not for the Air Fry Smart Programs.

1. Select a Smart Program, adjust the settings as you want, then press **Delay Start**.

   Once Delay Start has been selected, there is no way to return to the cooking settings. To adjust Smart Program settings, press Cancel and enter new selections.

2. When the hours field flashes, use the **Time – / +** buttons to adjust the delay time hours.
3. Press **Delay Start** again to toggle to the minutes field and adjust the delay time minutes.
4. Delay Start begins automatically and the timer counts down.
5. When Delay Start ends, the Smart Program begins, and the display indicates **On**.

112-0120-01_140-0021-01_IB_Duo-Crisp_6QT-8QT_US_Manual_R9-FINAL-04-18-2024.indd 14 4/19/24 11:32 AM

Save Custom Temperatures

You can set and save custom temperatures for the Sous Vide, Air Fry, Roast, Bake, Broil and Dehydrate Smart Programs.

1. Select the Smart Program you want to set.
2. Use the **Temp – / +** buttons to adjust the temperature in °F or °C.
3. Press **Start** to start the program and save the temperature.

   The next time you use that Smart Program, the new temperature is used. Adjustments made after cooking begins are not saved.

Reset Smart Programs to original settings

Reset Individual Smart Programs

1. With the cooker in Standby mode, press and hold one Smart Program button until the cooker returns to Standby and shows **OFF**.

   The Smart Program's pressure level, cooking time and temperature are restored to the factory default setting.

Reset All Smart Programs

2. With the cooker in Standby mode, press and hold **Cancel** until the cooker beeps.

   All Smart Program pressure levels, cooking times and temperatures are restored to the factory default setting.

112-0120-01_140-0021-01_IB_Duo-Crisp_6QT-8QT_US_Manual_R9-FINAL-04-18-2024.indd 15 4/19/24 11:32 AM

INITIAL SETUP

Clean before use

1. Wash the inner cooking pot with hot water and soap. Rinse and use a soft cloth to dry the outside. Or you can wash the inner cooking pot in the dishwasher.
2. Wipe the heating element inside the cooker base with a soft cloth to ensure there are no stray packaging particles.
3. Wash the accessories with hot water and dish soap. Rinse with warm, clear water and use a soft cloth to dry.

112-0120-01_140-0021-01_IB_Duo-Crisp_6QT-8QT_US_Manual_R9-FINAL-04-18-2024.indd 16 4/19/24 11:32 AM

Setting up the condensation collector

The condensation collector sits at the back of the cooker base and accumulates overflow moisture from the condensation rim. It should be installed before cooking, then emptied and rinsed out after each use.

Remove the condensation collector

1. Pull the condensation collector away from the cooker base; do not pull down.

   Note the tabs on the cooker base and the grooves on the condensation collector.

Install the condensation collector

1. Align the grooves on the condensation collector with the tabs on the back of the cooker base and slide the condensation collector into place.

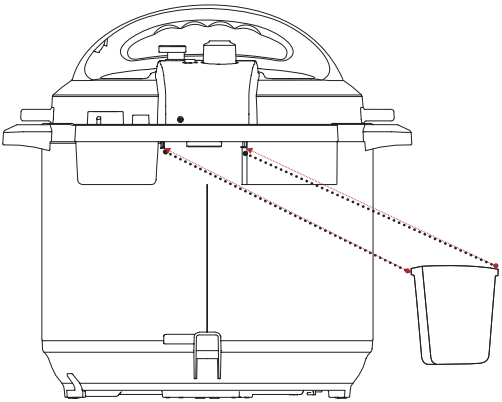

112-0120-01_140-0021-01_IB_Duo-Crisp_6QT-8QT_US_Manual_R9-FINAL-04-18-2024.indd 17 4/19/24 11:32 AM

Steam release valve

When the cooker releases pressure, steam ejects from the top of the steam release valve. The steam release valve is integral to product safety and necessary for pressure cooking. It must be installed before use and cleaned regularly.

Remove the steam release valve

- Pull the steam release valve up and off the steam release pipe.

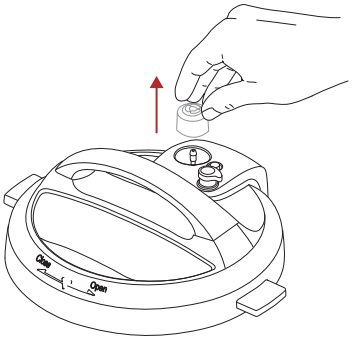

- The steam release valve must be installed before using the cooker.

Install the steam release valve

- Place the steam release valve on the steam release pipe and press down firmly.

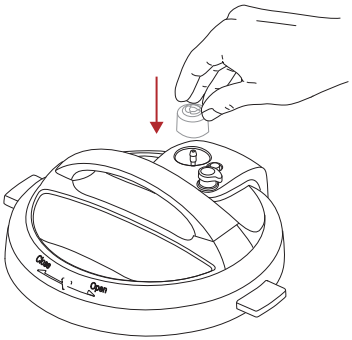

112-0120-01_140-0021-01_IB_Duo-Crisp_6QT-8QT_US_Manual_R9-FINAL-04-18-2024.indd 18 4/19/24 11:32 AM

- The steam release valve sits loosely on the steam release pipe when installed properly but should remain in place when the lid is turned over.

Float valve and silicone cap

The float valve shows whether there is pressure in the cooker (float valve up) or not (float valve down).

Remove the float valve from the lid

- Place one finger on the flat top of float valve, then turn the lid over. Detach the silicone cap from the bottom side of the float valve.
- Remove the float valve from the top of the lid. Do not discard the float valve or silicone cap.

Install the float valve

- Drop the narrow end of the float valve into the float valve hole on the top of the lid. Place one finger on the flat top of the float valve, then turn the lid over. Firmly attach the silicone cap to the bottom of the float valve.
- Do not attempt to operate the pressure cooker without the float valve and/or silicone cap properly installed in the pressure cooking lid.

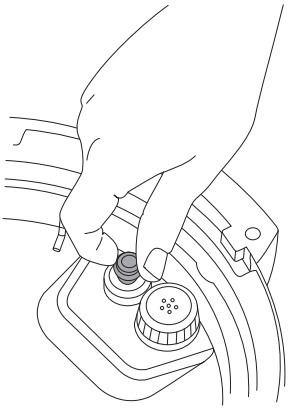

112-0120-01_140-0021-01_IB_Duo-Crisp_6QT-8QT_US_Manual_R9-FINAL-04-18-2024.indd 19 4/19/24 11:32 AM

Using the Sealing Ring

When the lid is closed, the sealing ring installed on the underside of the lid creates an air-tight seal between the lid and the cooker base.

- The sealing ring must be installed before using the cooker and should be cleaned after each use.
- Install 1 sealing ring at a time; use one for sweet dishes and one for savory.
- Sealing rings stretch over time with normal use. To keep your product safe, replace the sealing ring every 12 to 18 months. Replace sooner if you notice stretching, deformation, or damage.

Install the Sealing Ring

1. Place the sealing ring over the sealing ring rack and press it into place. Press down firmly to ensure there is no puckering.
2. The sealing ring should be snug and should not fall out when the lid is turned over.

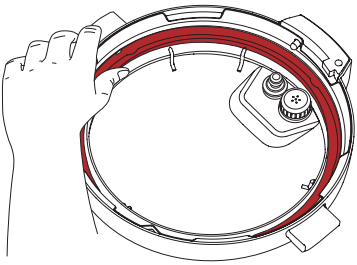

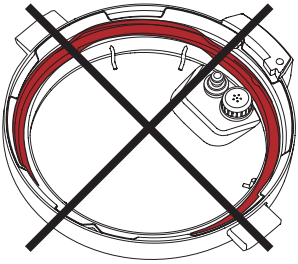

112-0120-01_140-0021-01_IB_Duo-Crisp_6QT-8QT_US_Manual_R9-FINAL-04-18-2024.indd 20 4/19/24 11:32 AM

Remove the Sealing Ring

1. Grip the edge of the sealing ring and pull it out from behind the sealing ring rack.

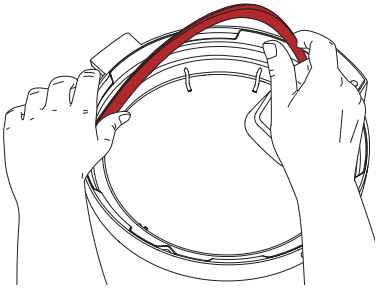

2. Inspect the rack to ensure it is secured, centered, and an even height all the way around the lid. If the sealing ring rack is deformed, do not try to repair it.

Anti-Block Shield

The anti-block shield prevents food particles from coming up through the steam release pipe, assisting with pressure regulation.

As an integral part of product safety, the anti-block shield must be installed before use and cleaned frequently.

Remove the Anti-Block Shield

- Grip the lid like a steering wheel and use your thumbs to press firmly against the side of the anti-block shield (pressing towards the side of the lid and up) until it pops off the prongs underneath.

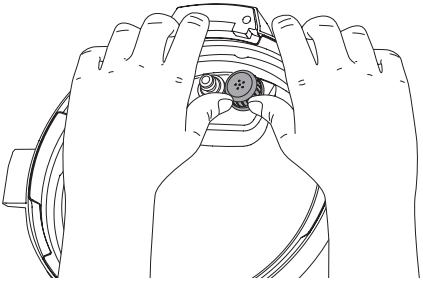

112-0120-01_140-0021-01_IB_Duo-Crisp_6QT-8QT_US_Manual_R9-FINAL-04-18-2024.indd 21 4/19/24 11:32 AM

Install the Anti-Block Shield

- Place anti-block shield over prongs and press down until it snaps into position. Do not attempt to operate the pressure cooker without the anti-block shield installed.

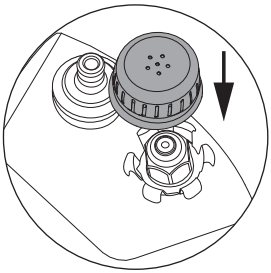

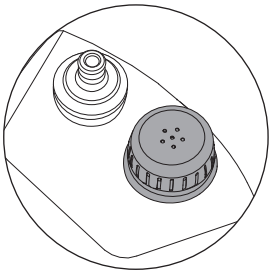

Assembling the multi-level air fryer basket

1. Place the air fryer basket base on a stable surface.
2. Position the air fryer basket over the base and press down firmly. The teeth on the base should pop into the groove on the outside of the basket.
3. Insert the broil/dehydrating tray into the multi-level air fryer basket, ensuring that the raised rim is facing down.

   To easily lift and position the tray, hold the large holes in the middle of the tray with 2 fingers.

   You must use the air fryer basket with the inner cooking pot.

112-0120-01_140-0021-01_IB_Duo-Crisp_6QT-8QT_US_Manual_R9-FINAL-04-18-2024.indd 22 4/19/24 11:32 AM

Test run

Setting up your new Instant Pot Duo Crisp for a test run is a great way to familiarize yourself with how the unit works before you actually cook a meal.

To perform a test run:

1. Add 3 cups water to the inner cooking pot.
2. Place the inner cooking pot into the cooker base.
3. Place the lid on top of the cooker base and lock the lid.

   See 'How to lock the lid' below.
4. Press **Pressure Cook** on the Control Panel.
5. Use the **– / + Time** buttons to adjust the cooking time to 5 minutes.
6. Press **Keep Warm** to turn off the Keep Warm setting.
7. Press **Start** to begin. The message display shows On.
8. When cooking is done, the display shows **End**.
9. Release steam by pressing the steam release button until it clicks and locks to the **Vent** position.

   See 'How to release steam' below for complete instructions.
10. Unlock and open the lid.

    See 'How to unlock the lid' below.
11. Discard any remaining water, and then wash and dry the inner cooking pot.

Now you're ready to cook a meal in your Instant Pot Duo Crisp!

112-0120-01_140-0021-01_IB_Duo-Crisp_6QT-8QT_US_Manual_R9-FINAL-04-18-2024.indd 23 4/19/24 11:32 AM

USING THE PRESSURE COOKER LID

You'll use the stainless steel lid for most cooking programs, and especially for pressure cooking. Always use the pressure cooking lid that came with this Instant Pot Duo Crisp cooker base.

How to close and lock the lid

For pressure cooking, the lid must be securely locked into place to prevent steam from escaping. When you place the lid on the cooker base:

1. Line up the arrow symbol on the lid with the unlock symbol on the cooker base and lower the lid onto the track.
2. Turn the lid until the arrow symbol on the lid lines up with the lock symbol on the cooker base.

How to unlock and open the lid

Once steam is completely released, you must unlock the lid before opening it:

1. Turn the lid handle to line up the arrow symbol on the lid with the unlock symbol on the cooker base.
2. Lift the lid up and off the cooker base.

How to release steam

Instant Pot Duo Crisp can release steam in 3 different ways. Use the one that best fits the type of food you're cooking.

Natural steam release

Releases steam gradually over time (up to 40 minutes or more) as after cooking stops.

1. After cooking, leave steam release switch in **Seal** position until all pressure is released.
2. Float valve drops into lid when all steam is released.
3. After steam release, turn lid counterclockwise and remove the lid.

112-0120-01_140-0021-01_IB_Duo-Crisp_6QT-8QT_US_Manual_R9-FINAL-04-18-2024.indd 24 4/19/24 11:32 AM

Quick steam release

Quickly releases steam after you press the steam release switch.

1. After cooking, press the steam release button down until it clicks and locks in the **Vent** position and wait for all pressure to release.
2. Float valve drops into lid when all steam is released.
3. After steam release, turn lid counterclockwise and remove the lid.

Timed steam release

Allows food to continue cooking as steam releases for a specific time that you set.

1. After cooking, leave steam release switch in **Seal** position for the set time.
2. When timer reaches 00:00, set steam release switch to **Vent** position and wait for all pressure to release.
3. Float valve drops into lid when all steam is released.
4. After steam release, turn lid counterclockwise and remove the lid.

You can insert the handle into the cooking base vertically for easy storage.

⚠ CAUTION

This appliance uses pressure to cook. Allow the appliance to release all excess pressure and steam before opening the lid. Opening the lid before pressure is released may result in burns, personal injury and/or property damage.

112-0120-01_140-0021-01_IB_Duo-Crisp_6QT-8QT_US_Manual_R9-FINAL-04-18-2024.indd 25 4/19/24 11:32 AM

USING THE AIR FRYER LID

You'll use the air fryer lid for all air frying. Always use the air fryer lid that came with this Instant Pot Duo Crisp cooker base.

Open the Lid

1. Turn the lid handle to align the arrow symbol on the lid with the unlock symbol on the cooker base.
2. Lift the lid up and off the cooker base.

Close the Lid

1. Align the arrow symbol on the lid with the unlock symbol on the cooker base and lower the lid onto the track.

   Press the lid down slightly to ensure that the lid sensor connector contacts the base sensor connector.
2. Turn the lid until the arrow symbol on the lid aligns with the lock symbol on the cooker base.

Store the Lid

1. Place the protective pad on the counter with the grooved side facing up.
2. Align the back of the air fryer lid with **OPEN** on the protective pad, then turn the air fryer lid clockwise to the **LOCK** position.

112-0120-01_140-0021-01_IB_Duo-Crisp_6QT-8QT_US_Manual_R9-FINAL-04-18-2024.indd 26 4/19/24 11:32 AM

PRESSURE COOK

Pressure cooking uses pressurized steam to quickly and evenly cook foods.

Pressure cooking programs

Your Instant Pot Duo Crisp includes 2 Smart Programs for pressure cooking:

Pressure Cook: for foods that cook more slowly, like stews.
Steam: for foods that cook quickly, like veggies.

Choose from these settings in the Pressure Cook Smart Program:

	Default Pressure	Pressure Options	Default Cooking Time	Min Cooking Time	Max Cooking Time
Pressure Cook	High	High Low	35 minutes (00:35)	0 minutes (00:00)	4 hours (04:00)
Steam	High	High Low	30 minutes (00:30)	0 minutes (00:00)	4 hours (04:00)

Other settings

- Automatic Keep Warm is set to ON by default.
- Delay Start is available.

How to pressure cook

Prep

Cut, chop, season or marinate your ingredients according to your recipe.

Preheat

1. Place the inner cooking pot into the cooker base and add ingredients.
2. Place the pressure cooker lid on top of the cooker base and lock the lid. Ensure the steam release switch is in the **Seal** position.
3. Choose a Smart Program for cooking and press its button on the Control Panel.
4. The default cooking time displays; if you want to increase or decrease the time, press **+** or **–**.

112-0120-01_140-0021-01_IB_Duo-Crisp_6QT-8QT_US_Manual_R9-FINAL-04-18-2024.indd 27 4/19/24 11:32 AM

5. The default pressure level displays; If you want to change it, press Pressure Cook to select High or Low pressure.
6. Keep Warm setting is ON by default. Press Keep Warm to turn it off.
7. Press Start. After 10 seconds, the display shows On and the cooker is building pressure.

It can take 10-15 minutes to reach the pressure setting for cooking. Frozen foods increase the preheating time.

The pressure level and time you choose will be the new settings the next time you use that Smart Program.

Cook

1. When the pressure is ready, the Instant Pot Duo Crisp starts cooking.
2. The cooking timer starts counting down.

You can press Cancel to stop cooking and cancel a Smart Program at any time.

Stop cooking

1. When the timer reaches 00:00, cooking stops.
2. If Keep Warm is **ON**, the timer starts counting up.

Release steam

Choose from the steam release method that works for your recipe.

See 'How to release steam' for full details.

Using liquid to create steam

Pressure cooking requires liquid in the inner cooking pot to produce the steam needed. Depending on the size of your Instant Pot Duo Crisp, here are the minimum amounts you'll need:

Instant Pot Size	Minimum Liquid for Pressure Cooking*
6 Quarts / 5.7 Litres	1 1/2 cups (12 oz / 375 mL)
8 Quarts / 7.6 Litres	2 cups (16 oz / 500 mL)

**Unless otherwise specified in recipe.*
Pressure cooking liquids should be water-based, such as broth, stock, soup or juice. If using canned, condensed, or cream-based soup, add water as directed above.

112-0120-01_140-0021-01_IB_Duo-Crisp_6QT-8QT_US_Manual_R9-FINAL-04-18-2024.indd 28 4/19/24 11:32 AM

SAUTÉ

Use Sauté in place of a frying or saucepan. Sautéing can deepen the flavors of your food, or can simmer, thicken or reduce sauces.

Choose from these settings in the Sauté Smart Program:

Setting	Less	Normal	More
Cooking time	15 minutes (00:15)	20 minutes (00:20)	30 minutes (00:30)
Best for	Simmering, thickening, and reducing liquids	Pan-searing or sautéing	Stir-frying or browning meat

Other settings

- Automatic Keep Warm is set to OFF by default.
- Delay Start is not available.

How to sauté

Prep

Cut, chop, season or marinate your ingredients according to your recipe.

Preheat

1. Place the inner cooking pot into the cooker base.
2. Press Sauté.
3. Cycle through temperature presets to select **Less**, **Normal**, or **More**.
4. Press **–** / **+** to adjust cooking time.
5. Keep Warm setting is on by default. Press **Keep Warm** again to turn it off.
6. After 10 seconds, the display shows **On** and displays timer.

112-0120-01_140-0021-01_IB_Duo-Crisp_6QT-8QT_US_Manual_R9-FINAL-04-18-2024.indd 29 4/19/24 11:32 AM

Cook

1. When display shows **Hot**, add ingredients.
2. When timer ends, display shows **End**.

   You can press Cancel to stop cooking at any time.

Sautéing before Pressure or Slow Cooking

Quite often, you'll want to sauté foods to brown them before further cooking them.

1. Sauté ingredients.
2. Press **Cancel**.

   *You can deglaze the cooking pot now before switching to **Pressure Cook** or **Slow Cook** (see **Deglazing Inner Pot**).*

3. Select the Smart Program you want to use to cook.

Deglazing

Deglazing is the process of adding a liquid to a hot pan, releasing all of the delicious, caramelized pieces stuck to the bottom.

1. Remove food from cooking pot.
2. Add water, broth, or wine.
3. Use wooden spoon or silicone spatula to loosen food stuck to bottom of the inner cooking pot.

112-0120-01_140-0021-01_IB_Duo-Crisp_6QT-8QT_US_Manual_R9-FINAL-04-18-2024.indd 30 4/19/24 11:32 AM

SLOW COOK

Slow Cook lets you make your favorite simmering and stewing recipes – just like grandma used to make. This program does not use pressure to cook food. Make sure steam release is set to Venting or use a glass lid with a venting hole.

Choose from these settings in the Slow Cook Smart Program:

Setting	Less	Normal	More
Best for	'Low and Slow' cooking	Medium setting equivalent on traditional slow cookers	High setting equivalent on traditional slow cookers
Cooking Time	10 hours (10:00)	8 hours (08:00)	4 hours (04:00)

Other settings

- Automatic Keep Warm is set to ON by default.
- Delay Start is not available.

How to slow cook

Prep

Cut, chop, season or marinate your ingredients according to your recipe.

Cook

1. Place the inner cooking pot into the cooker base.
2. Add ingredients to the inner cooking pot.
3. Place pressure cooker lid on top of the cooker base and lock the lid.
4. Press **Slow Cook**.
5. Cycle through temperature presets to select **Less**, **Normal**, or **More**.
6. Press **–** / **+** to adjust cooking time.

112-0120-01_140-0021-01_IB_Duo-Crisp_6QT-8QT_US_Manual_R9-FINAL-04-18-2024.indd 31 4/19/24 11:32 AM

7. Keep Warm setting is **On** by default. Press **Keep Warm** again to turn it off.
8. After 10 seconds, the display shows **On** and displays timer.

Keep Warm

When cooking completes, the display shows **End** if **Keep Warm** is turned off. If not, the timer begins counting from **00:00** up to 10 hours (**10:00**).

112-0120-01_140-0021-01_IB_Duo-Crisp_6QT-8QT_US_Manual_R9-FINAL-04-18-2024.indd 32 4/19/24 11:32 AM

KEEP WARM

The Keep Warm setting turns on automatically after cooking on all Smart Programs except Sauté and Yogurt. You can also use Keep Warm to reheat food.

How to keep warm after cooking

1. When cooking is finished, automatic warming begins. The timer shows the time passed, up to 10 hours.
2. To turn automatic warming off (either during cooking or during automatic warming), press Keep Warm and the light above the button turns off.

How to reheat

Prep

Place the food to be reheated into the inner cooking pot or into an oven-safe baking dish that fits in the Pro cooker base.

Reheat

1. Place the inner cooking pot into the cooker base.
2. Place the lid on top of the cooker base and lock the lid.
3. When in Standby mode, press **Keep Warm**.
4. Press again to cycle through **Less**, **Normal** and **More** temperature levels.
5. Press the **–** / **+** buttons to set a timer for up to 99 hours and 50 minutes.

112-0120-01_140-0021-01_IB_Duo-Crisp_6QT-8QT_US_Manual_R9-FINAL-04-18-2024.indd 33 4/19/24 11:32 AM

AIR FRY

Duo Crisp uses the Air Fry lid to produce rapid air circulation to crisp or cook food, giving your meals all the rich, crispy flavor of deep frying, with little to no oil.

Choose from these settings in the Air Fry Smart Program:

Setting	Default	Minimum	Maximum
Temperature	400°F / 204°C	180°F / 82°C	400°F / 204°C
Cooking Time	18 minutes (00:18)	1 minute (00:01)	1 hour (01:00)

There are two options for air frying:

- Give your food a crisp finish after cooking with the Pressure Cook, Slow Cook or Steam Smart Programs.
- Cook your dish entirely with the Air Fry, Roast, Bake or Broil Smart Programs.

What to cook in

For best results use the provided air fryer basket or you can also cook directly in the inner cooking pot if your recipe calls for that.

Prep

Cut, chop, season, marinate or batter your ingredients according to your recipe.

Cook

1. Place your food into the air fryer basket or directly in the inner pot, according to your recipe.
2. Insert the inner pot into the cooker base.
3. Place the lid on the cooker base.
4. Press **Air Fry**.
5. Use the **Temp + / –** buttons to adjust the temperature.
6. Use the **Time + / –** buttons to adjust the cooking time.

112-0120-01_140-0021-01_IB_Duo-Crisp_6QT-8QT_US_Manual_R9-FINAL-04-18-2024.indd 34 4/19/24 11:32 AM

7. Press **Start** to begin. The display shows **On** to indicate that pre-heating has started.

   Note: Adjustments to the cooking time and temperature are saved when you press Start.

8. When the cooker reaches the target temperature, the cooking countdown timer starts.

Turn

1. Part way through the cooking cycle the display shows **Turn Food**.

   *Some food does not require turning. If you do not remove the lid after **Turn Food** displays, cooking will proceed after 10 seconds.*

2. Lift the air fryer lid off the cooker base and place it on the protective pad.

   Lifting the lid automatically pauses cooking for 3 minutes. After 3 minutes the program will stop, and the air fryer lid will go into Standby mode.

3. Carefully turn, flip, or rotate your food.
4. Replace the air fryer lid and close it again. Cooking continues.

Finish

1. When the Smart Program completes, the lid beeps, and the display shows **End**.

   The air fryer lid beep after 5 minutes, 20 minutes, and 60 minutes to remind you that cooking has completed.

112-0120-01_140-0021-01_IB_Duo-Crisp_6QT-8QT_US_Manual_R9-FINAL-04-18-2024.indd 35 4/19/24 11:32 AM

ROAST

You can roast foods like beef, lamb, pork, poultry, vegetables and scalloped potatoes, for a deliciously tender inside and browned outside.

Choose from these settings in the Roast Smart Program:

Setting	Default	Minimum	Maximum
Temperature	380°F / 193°C	180°F / 82°C	400°F / 204°C
Cooking Time	40 minutes (00:40)	1 minute (00:01)	1 hour (01:00)

To roast

- Follow the basic instructions for Air Frying.
- Select "Roast" as the Smart Program.

112-0120-01_140-0021-01_IB_Duo-Crisp_6QT-8QT_US_Manual_R9-FINAL-04-18-2024.indd 36 4/19/24 11:32 AM

BAKE

You can bake foods like breads, cakes, pastries and buns, with the Duo Crisp acting like your own "mini oven."

Choose from these settings in the Bake Smart Program:

Setting	Default	Minimum	Maximum
Temperature	365°F / 185°C	180°F / 82°C	400°F / 204°C
Cooking Time	30 minutes (00:30)	1 minute (00:01)	1 hour (01:00)

To bake

- Follow the basic instructions for Air Frying.
- Select "Bake" as the Smart Program.
- There is no need to turn the food partway through cooking.

Leave approximately 1"/ 2.5 cm of space around all sides of the baking dish to allow heat to circulate evenly.

112-0120-01_140-0021-01_IB_Duo-Crisp_6QT-8QT_US_Manual_R9-FINAL-04-18-2024.indd 37 4/19/24 11:32 AM

BROIL

Broiling cooks using direct top-down heating, and broiled foods are best when placed close to the heating element.

Choose from these settings in the Broil Smart Program:

Setting	Default	Minimum	Maximum
Temperature	400°F / 204°C	Not adjustable	Not adjustable
Cooking Time	8 minutes (00:08)	1 minute (00:01)	40 minutes (00:40)

To broil

- Follow the basic instructions for Air Frying.
- Place food in the broil/dehydrating tray in the air fryer basket.
- Select "Broil" as the Smart Program.
- There is no need to turn the food partway through cooking.

112-0120-01_140-0021-01_IB_Duo-Crisp_6QT-8QT_US_Manual_R9-FINAL-04-18-2024.indd 38 4/19/24 11:32 AM

DEHYDRATE

Dehydrating uses low heat over a long period of time to safely dry out food items, like dried fruit, jerky and dried veggies.

Setting	Default	Minimum	Maximum
Temperature	125°F / 52°C	105°F / 41°C	165°F / 74°C
Cooking Time	7 hours (07:00)	1 hour (01:00)	72 hours (72:00)

To dehydrate

- Follow the basic instructions for Air Frying.
- Place food in the broil/dehydrating tray in the air fryer basket.
- Select "Dehydrate" as the Smart Program.
- There is no need to turn the food partway through cooking.

112-0120-01_140-0021-01_IB_Duo-Crisp_6QT-8QT_US_Manual_R9-FINAL-04-18-2024.indd 39 4/19/24 11:32 AM

CLEANING

Clean your Instant Pot Duo Crisp after each use. Always unplug the unit and let all parts cool to room temperature before cleaning. Before use or storing, make sure all surfaces are dry.

Part	Cleaning instructions
Pressure Cooker Lid and parts • Anti-Block Shield • Sealing Ring • Steam Release Valve • Float Valve • Silicone Cap	• Hand wash with hot water and mild dish soap or wash in dishwasher, top rack. • Remove all small parts from lid before washing. • With steam release valve and anti-block shield removed, clean interior of steam release pipe to prevent clogging. • To drain water from the lid after dishwashing, grasp the lid handle and hold the lid vertically over a sink, then turn it all the way around. • After cleaning, store the lid upside down on the cooker base. • Store sealing rings in a well-ventilated area to disperse odor. • To eliminate odors from sealing ring, add 1 cup (8 oz / 250 mL) water and 1 cup (8 oz / 250 mL) white vinegar to inner cooking pot, and run Pressure Cook for 5–10 minutes, then use Quick Steam Release.
Air Fryer Lid	• Allow the air fryer lid to cool to room temperature, then clean the heating element and surrounding area with a soft, damp cloth or sponge. Ensure it is free of food debris and/or grease splatter. • Wipe the exterior clean with a soft damp cloth or sponge. • Do not remove the heating element cover.

112-0120-01_140-0021-01_IB_Duo-Crisp_6QT-8QT_US_Manual_R9-FINAL-04-18-2024.indd 40 4/19/24 11:32 AM

Part	Cleaning instructions
Inner Cooking Pot	• Wash after each use. • Hand wash with hot water and mild dish soap or wash in dishwasher*. • Hard water stains may need a vinegar-dampened sponge and scrubbing to remove. • For tough or burned food residue, soak in hot water for a few hours before cleaning. • Dry all exterior surfaces before placing in cooker base.
Accessories • Steam Rack • Condensation Collector • Protective Pad and Storage Cover • Multi-Level Air Fryer Basket • Air Fryer Basket Base • Broil/Dehydrating Tray	• Wash after each use. • Hand wash with hot water and mild dish soap or wash in dishwasher, top rack. • Never use harsh chemical detergents, powders or scouring pads on accessories. • Empty and rinse condensation collector after each use.
Power cord	• Use a barely-damp cloth to wipe any particles off cord.
Cooker base	• Wipe the inside of the cooker base as well as the condensation rim with a barely-damp cloth, and allow to air dry. • Clean the outside of the cooker base and the control panel with a soft, barely-damp cloth or sponge.

**Some discoloration may occur after machine washing, but this will not affect the cooker's safety or performance.*

112-0120-01_140-0021-01_IB_Duo-Crisp_6QT-8QT_US_Manual_R9-FINAL-04-18-2024.indd 41 4/19/24 11:32 AM

TROUBLESHOOTING

Problem	Cause	Solution
Difficulty closing lid	Sealing ring not properly installed	• Reposition sealing ring, ensure it is snug behind sealing ring rack.
	Contents in cooker are still hot	• Set Steam Release switch to Vent, then lower lid onto cooker base
Difficulty opening lid	Pressure inside the cooker	• Release pressure according to recipe; only open lid after float valve has dropped down.
Inner pot is stuck to lid when cooker is opened	Cooling of inner pot may create suction, causing inner pot to adhere to the lid	• To release the vacuum, set Steam Release to Vent.
Steam leaks from side of lid	No sealing ring in lid	• Install sealing ring.
	Sealing ring damaged or not properly installed	• Replace sealing ring.
	Food debris attached to sealing ring	• Remove sealing ring and clean thoroughly.
	Lid not closed properly	• Open, then close lid.
	Sealing ring rack is warped or off-center	• Remove sealing ring from lid, check sealing ring rack for bends or warps. Contact Consumer Care.
	Inner cooking pot rim may be misshapen	• Check for deformation and contact Consumer Care.
Minor steam leaking/ hissing from steam release vent during cooking cycle	Cooker is regulating excess pressure	• This is normal; no action required.

112-0120-01_140-0021-01_IB_Duo-Crisp_6QT-8QT_US_Manual_R9-FINAL-04-18-2024.indd 42 4/19/24 11:32 AM

Problem	Cause	Solution
Steam gushes from steam release vent when Steam Release switch is in Seal position	Not enough liquid in the inner pot	• Add thin, water-based liquid to the inner pot according to its size: 6 Quart: 1 1/2 cups (12 oz / 375 mL) 8 Quart: 2 cups (16 oz / 500 mL)
	Pressure sensor control failure	• Contact Consumer Care.
	Internal steam release valve not seated properly	• Check Steam Release switch to ensure it's set to Seal.
Display remains blank after connecting the power cord	Bad power connection or no power	• Inspect power cord for damage. If damage is noticed, contact Consumer Care. • Check outlet to ensure it is powered.
	Cooker's electrical fuse has blown	• Contact Consumer Care.
Occasional clicking or light cracking sound	The sound of power switching and expanding pressure board when changing temperatures	• This is normal; no action needed.
	Bottom of the inner pot is wet	• Wipe exterior surfaces of inner pot. Ensure heating element is dry before inserting inner pot into cooker base.
Error code appears on display and cooker beeps continuously	There is an issue with the cooker	• Read "Error Codes" for instructions.

112-0120-01_140-0021-01_IB_Duo-Crisp_6QT-8QT_US_Manual_R9-FINAL-04-18-2024.indd 43 4/19/24 11:32 AM

ERROR CODES

If the control panel displays an error code from this list, there is an issue with the Duo Plus. Here are the actions you should take to fix the problem.

Problem	Cause	Solution
C1 C2 C6 C6H C6L	Faulty sensor	• Contact Consumer Care.
C5	Temperature is too high because inner pot is not placed in the cooker base	• Press Cancel and wait for heating element to cool; ensure there are no foreign objects in cooker base; insert or reposition inner pot in cooker base and re-enter commands.
C5	Temperature is too high because there is no water in inner pot	• Check for scorching on bottom of inner pot. Add thin, water-based liquid to the inner pot according to its size: • 3 Quart: 1 cup (8 oz / 250 mL) 6 Quart: 1 1/2 cups (12 oz / 375 mL) 8 Quart: 2 cups (16 oz / 500 mL)
C7 or NoPr	Heat element has failed	• Contact Consumer Care.
C7 or NoPr	Not enough liquid	• Add thin, water-based liquid to the inner pot according to its size: • 3 Quart: 1 cup (8 oz / 250 mL) 6 Quart: 1 1/2 cups (12 oz / 375 mL) 8 Quart: 2 cups (16 oz / 500 mL)
C7 or NoPr	Quick release button is in the Vent position	• Check Steam Release switch to ensure it's set to Seal.
Lid	Lid is not in the correct position for the selected program	• Open and close the lid. Do not use a lid when using Sauté.

112-0120-01_140-0021-01_IB_Duo-Crisp_6QT-8QT_US_Manual_R9-FINAL-04-18-2024.indd 44 4/19/24 11:32 AM

Problem	Cause	Solution
Food burn	High temperature detected at bottom of inner pot; cooker automatically reduces temperature to avoid overheating	• Starch deposits at the bottom of the inner pot may have blocked heat dissipation. • Turn the cooker off, release pressure according to the recipe, and inspect the bottom of the inner pot.
PrSE	Pressure has accumulated during a non-pressure cooking program	• Set Steam Release switch to Vent.

PRODUCT SPECIFICATIONS

Model	Volume	Wattage	Power
Duo Crisp AF 6	6 Quarts 5.7 Litres	1500 W	120V/ 60 Hz
Duo Crisp AF 8	8 Quarts 7.6 Litres	1500 W	120V/ 60 Hz

112-0120-01_140-0021-01_IB_Duo-Crisp_6QT-8QT_US_Manual_R9-FINAL-04-18-2024.indd 45 4/19/24 11:32 AM

LEARN MORE

There's a whole world of Instant® cooking information and help just waiting for you. Here are some of the most helpful resources.

Register your product

Instantpot.com/register

Contact Consumer Care

In the Instant Connect™ App
Instantpot.com/customer-care-center
support@instantpot.com

Download the Instant Connect™ App

Discover guided cooking and recipes
Available at iOS and Android app stores

Cooking charts and more recipes

Instantpot.com

How-to videos, tips and more

Instantpot.com

Replacement parts and accessories

Instantpot.com

Join the community

112-0120-01_140-0021-01_IB_Duo-Crisp_6QT-8QT_US_Manual_R9-FINAL-04-18-2024.indd 46 4/19/24 11:32 AM

WARRANTY

One (1) Year Limited Warranty

This One (1) Year Limited Warranty applies to purchases made from authorized retailers of Instant Pot Brands by the original appliance owner and is not transferable. Proof of original purchase date and, if requested by Instant Pot Brands, return of your appliance, is required to obtain service under this Limited Warranty. Provided the appliance was used in accordance with the use & care instructions, Instant Pot Brands will, in its sole and exclusive discretion, either: (i) repair defects in materials or workmanship; or (ii) replace the appliance. In the event that your appliance is replaced, the Limited Warranty on the replacement appliance will expire twelve (12) months from the date of receipt. Failure to register your product will not reduce your warranty rights. The liability of Instant Pot Brands, if any, for any allegedly defective appliance or part will not exceed the purchase price of a comparable replacement appliance.

What is not covered by this warranty?

- Products purchased, used, or operated outside of the United States and Canada.
- Products that have been modified or attempted to be modified.
- Damage resulting from accident, alteration, misuse, abuse, neglect, unreasonable use, use contrary to the operating instructions, normal wear and tear, commercial use, improper assembly, disassembly, failure to provide reasonable and necessary maintenance, fire, flood, acts of God, or repair by anyone unless directed by an Instant Pot Brands representative.
- Use of unauthorized parts and accessories.
- Incidental and consequential damages.
- The cost of repair or replacement under these excluded circumstances.

EXCEPT AS EXPRESSLY PROVIDED HEREIN AND TO THE EXTENT PERMITTED BY APPLICABLE LAW, INSTANT POT BRANDS MAKES NO WARRANTIES, CONDITIONS OR REPRESENTATIONS, EXPRESS OR IMPLIED, BY STATUTE, USAGE, CUSTOM OF TRADE OR OTHERWISE WITH RESPECT TO THE APPLIANCES OR PARTS COVERED BY THIS WARRANTY, INCLUDING BUT NOT LIMITED TO, WARRANTIES, CONDITIONS, OR REPRESENTATIONS OF WORKMANSHIP, MERCHANTABILITY, MERCHANTABLE QUALITY, FITNESS FOR A PARTICULAR PURPOSE OR DURABILITY.

112-0120-01_140-0021-01_IB_Duo-Crisp_6QT-8QT_US_Manual_R9-FINAL-04-18-2024.indd 47 4/19/24 11:32 AM

Some states or provinces do not allow for: (1) the exclusion of implied warranties of merchantability or fitness; (2) limitations on how long an implied warranty lasts; and/or (3) the exclusion or limitation of incidental or consequential damages; so these limitations may not apply to you. In these states and provinces, you have only the implied warranties that are expressly required to be provided in accordance with applicable law. The limitations of warranties, liability, and remedies apply to the maximum extent permitted by law. This limited warranty gives you specific legal rights, and you may also have other rights which vary from state to state or province to province.

Product Registration

Please visit **www.instantpot.com/register** to register your new Instant Pot Brands appliance. Failure to register your product will not diminish your warranty rights. You will be asked to provide the store name, date of purchase, model number (found on the back of your appliance) and serial number (found on the bottom of your appliance) along with your name and email address. The registration will enable us to keep you up to date with product developments and recipes, and contact you in the unlikely event of a product safety notification. By registering, you acknowledge that you have read and understand the instructions for use, and warnings set forth in the accompanying instructions.

Warranty Service

To obtain warranty service, please contact our Consumer Care Department by email to **support@instantpot.com**. You can also create a support ticket online at **www.instantpot.com**. If we are unable to resolve the problem, you may be asked to send your appliance to the Service Department for quality inspection. Instant Pot Brands is not responsible for shipping costs related to warranty service. When returning your appliance, please include your name, mailing address, email address, phone number, and proof of the original purchase date as well as a description of the problem you are encountering with the appliance.

112-0120-01_140-0021-01_IB_Duo-Crisp_6QT-8QT_US_Manual_R9-FINAL-04-18-2024.indd 48 4/19/24 11:32 AM

NOTES

112-0120-01_140-0021-01_IB_Duo-Crisp_6QT-8QT_US_Manual_R9-FINAL-04-18-2024.indd 49 4/19/24 11:32 AM

⚠WARNING

DO NOT place this appliance on or close to a gas or electric burner, or inside an oven. Always operate this appliance on a stable, non-combustible, level surface, such as a kitchen countertop.

In Canada, distributed by
Instant Pot Brands
199 Bay Street, Suite 4000
Toronto, ON M5L 1A9 Canada

In U.S., distributed by
Instant Pot Brands
8725 W Higgins Rd, Suite 725
Chicago,IL 60631

instantpot.com

© 2024 Instant Pot Brands

112-0120-01, 140-0021-01

Art release date
04/18/2024

INSTANT, INSTANT POT and DUO
are registered trademarks
of Instant Pot Brands