lifepro®

FlexCycle Plus™

Exercise Bike

User Manual

Motion, made easy.

Low-impact fitness from your seat.



Hello There!

Joel and I are athletes who suffered from severe ACL injuries a few months apart. We purchased multiple pieces of wellness equipment for our in-home rehab but were left disappointed and frustrated by wellness and recovery devices that made big promises but gave no support, no well-thought-out plan to follow, and no results. And that's how Lifepro came about, and why the Fitness collection was created–we've set out to change all of that. It's why every piece of equipment bearing our name not only undergoes rigorous scrutiny to make sure it delivers on power and efficacy, but also includes ongoing member support from our Lifepro team and a lifetime warranty so you're never left hanging.

Welcome to Lifepro.

We're in this together now.

Abe & Joel

Scan Here to Join Our Community!

We want you to be a part of our Lifepro crew! Join our VIP Facebook Group and connect with people around the world who are out there killing it, just like you.

YOUR FITNESS, YOUR WAY.

Table Of Contents

Parts and Pieces of the FlexCycle Plus 04
Assembly Guide 06
Exercise Guide 10
Tips for Using Your FlexCycle Plus 13
Operating Instructions 14
Cleaning and Storage 16
Troubleshooting Guide 17
Product Specifications 18
Safety Instructions 20
Lifetime Warranty 22

CUSTOMER SUPPORT

If you have any questions about setting up the FlexCycle Plus, we're here to help. Email us at *support@lifeprofitness.com* and an experienced customer support representative will be happy to assist you.

Parts and Pieces of the FlexCycle Plus



LifePro FlexCycle Plus™ Exercise Bike



(A) FlexCycle Plus



(D) Hand Pedals (2)



(G) Wrench



(F) Hex Key



Exercise Mat



Tether Strap

Scan Here → *Activate Your Warranty*

Scan the QR code to activate the lifetime warranty for your FlexCycle Plus within 14 days of purchase.

Assembly Guide

Scan Here →

Scan for more exciting content from Lifepro Fitness.

ASSEMBLY WARNINGS

- Adult assembly is required. Keep children away during assembly. This product contains small parts that could present a choking hazard to children.
- Properly dispose of all packaging especially plastic bags, which can present a suffocation hazard to small children, before assembly.

ASSEMBLY NOTES:

- Assemble on a flat, sturdy floor free of obstructions.
- We recommend assembling the FlexCycle Plus on a mat or tarp to avoid soiling carpet or flooring.
- Assembly instructions and diagrams include a reference letter; for example, "Gather the back panel (B)." The reference letters correspond to the letters identifying each part listed in **REFERENCE LETTERS** on page 05.

STEP 1: ATTACH THE STABILIZER

Gather the FlexCycle Plus (A), front stabilizer (B), rear stabilizer (C), and hex key (F).

Attach the front stabilizer

1. Use the hex key (F) to remove the screws and washers from the front stabilizer (B).
2. Align the front stabilizer under the metal attachment bracket at the front of the bike (A) so that the holes in the bracket line up with the holes in the stabilizer.
3. Insert the 2 screws and washers through the metal bracket and in the front stabilizer.
4. Use the hex key to tighten the 2 screws, securing the front stabilizer to the bike.



Attach the Rear stabilizer

1. Use the hex key (F) to remove the screws and washers from the rear stabilizer (C).
2. Align the rear stabilizer with the metal attachment bracket at the back of the FlexCycle Plus (A). Make sure the screw holes line up.
3. Insert the 2 screws and washers through the attachment bracket and in the stabilizer.
4. Use the hex key to tighten the 2 screws, securing the rear stabilizer to the bike.

Attach the Resistance Bands

1. Clip one resistance band to each of the metal loops on the top of the front stabilizer.

STEP 2: ATTACH THE PEDALS

1. Gather the FlexCycle Plus (A), the correct pedals for your preferred workout; hand (D) or foot (E), the hex key (F), and the wrench (G).
2. Screw the pedals (D or E) in the threaded opening in each pedal arm (left and right).
3. Use the included wrench (G) to tighten the nuts on both pedals, as shown in the image. Tighten the nuts as tight as possible so they do not loosen during use.

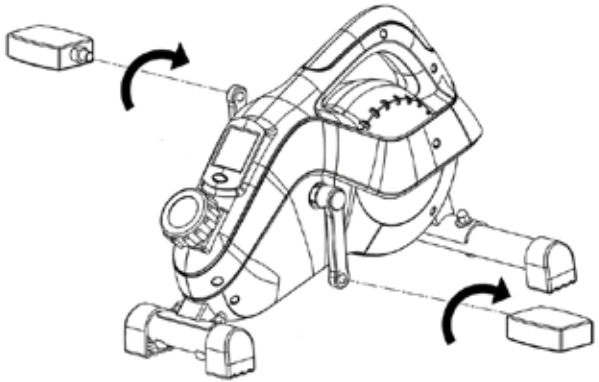

STEP 3: INSTALL BATTERIES IN THE CONTROL PANEL

1. Remove the monitor by carefully pulling it out from the top edge.
2. Insert 2 AAA batteries in the battery receptacle. Ensure they are oriented correctly.

STEP 4: INSTALL A FITNESS APP TO MANAGE YOUR WORKOUTS (OPTIONAL)

1. Scan the QR code below for a list of compatible fitness apps.

NOTE: If you do not already have a QR Code Scan app, you may need to download one first. Many newer phones have a QR code scanning feature built in the camera app.

2. Download your preferred fitness app.
3. On your phone, go to **Settings** > **Bluetooth** to turn on Bluetooth.
4. In the Bluetooth device list, connect to your FlexCycle Plus.
5. Open the app, and create an account.
6. Now, you can create a personalized exercise plan in the app. You can follow structured biking workouts, including cycling routes around the world. Track calories burned, your speed, workout duration, and all of your workout activity information. Create training goals, complete fitness challenges, and more.

NOTE: Apps are not affiliated with Lifepro. Some features may require in-app purchase.

Intended Uses

This product is intended to be used:

- On a sturdy, level, non-slip surface.
- With at least 12 inches of clearance on all sides.
- After spending at least 5 minutes warming up.

Exercise Guide

Using the FlexCycle Plus improves overall physical fitness and tones muscles, and when combined with a calorie-controlled diet, it can support healthy weight loss.

PRO TIP: Change up your workout duration and speed, as well as your exertion level and heart rate to keep improving your fitness and mobility.

STEP 1: WARM-UP PHASE

Warm-up stretches before exercising helps prevent pulled muscles and other exercise-related injuries. While doing the following stretches, do not force or jerk your muscles, and most importantly, if it hurts: STOP.

Touch Your Toes



1. Bend your knees slightly. Let your back and shoulders relax as you bend over and try to touch your toes.
2. Hold the stretch for 10-15 seconds. Repeat 3 times.

Stretch Your Legs, Calves, and Glutes



1. Sit on the floor or on a cushion. Place your left foot against your right inner thigh.
2. Bend toward your right foot, and try to touch your toes.
3. Hold the stretch for 10-15 seconds.
4. Switch legs and repeat. Stretch each leg 3 times.

Stretch Your Calves and Achilles



1. Place both hands on the wall in front of you with your left leg straight behind you.
2. Keep your left leg straight and your right heel on the ground as you lean your hips toward the wall.
3. Hold the stretch for 10-15 seconds.
4. Switch legs and repeat. Stretch each leg 3 times.

Stretch Your Groin and Inner Thigh Muscles



1. Sit on the floor or a cushion with your knees bent and the soles of your feet together.
2. Hold your ankles and bend forward at your hips.
3. Hold the stretch for 10-15 seconds. Repeat 3 times.

STEP 2: EXERCISE PHASE

During the exercise phase you're building muscle, stamina, and improving your cardiovascular health. It's important to begin slowly and increase your workout duration, intensity, and the resistance level of the pedals slowly over time. Work at your own pace and be sure to maintain a steady tempo throughout. The intensity of your workout should be sufficient to raise your heartbeat into the target zone shown in the graph.

Calculate your personal target heart rate when exercising based on your fitness goals.

MAXIMUM HEART RATE 220 - Your Age = Max Heart Rate

This value represents your maximum heart rate ("max HR"), and serves as a basis from which to calculate your training heart rate.

HEALTH & WELLNESS TRAINING Target Zone: 50-60% of Max HR

- Ideal for people who are overweight, older, beginners, or who exercise infrequently.
- Burn approx. 4-6 calories per minute to produce energy in this zone.

FAT BURNING TRAINING

Target Zone: 60-70% of Max HR

- Ideal for athletes and sports people who aim to lose weight.

Burn approx. 6-10 calories per minute to produce energy in this zone.

CONDITIONING & FITNESS TRAINING

Target Zone: 70-80% of Max HR

- Ideal for athletes and sports people who want to improve their stamina and/or conditioning.
- Burn approx. 10-12 calories per minute to produce energy in this zone.

For best results, calculate the average value of the selected target zone (see chart above):

- **Health & Wellness:** target zone average = 55% of max HR (max HR x 0.55)
- **Fat Burning:** target zone average = 65% of max HR (max HR x 0.65)
- **Conditioning & Fitness:** target zone average = 75% of max HR (max HR x 0.75)

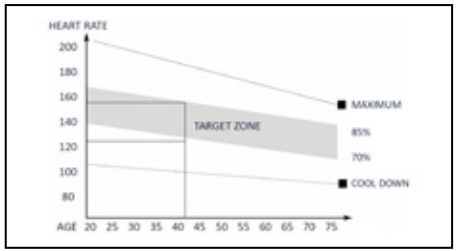

STEP 3: RECOVERY PHASE

- After exercising, it's important to give your body time to cool down and recover. Spend 5 minutes completing the same warm-up stretches again to allow yourself time to cool down. Be careful not to force or jerk your muscles as you stretch.

Tips for Using Your FlexCycle Plus

Keep your upper body still

- Pedaling is easier when you keep your upper body still.
- Use your legs to pedal, not your body.
- Your head and upper body should not move while you are pedaling.
- Don't rock from side to side.
- It is easier to keep your body still if you press your feet downward rather than forward on the pedals.

Exercising your arms

- You can also use the FlexCycle Plus to exercise your arms. Attach the arm pedals as shown on page 9. To exercise your arms:
- Hold onto the pedals with both hands.
- Push the pedals forward using a circular motion.
- The included resistance bands provide a great way to exercise your arms and legs at the same time. While you are biking, use the resistance bands to do bicep curls, shoulder presses, and more!

Safety tips

- Place the FlexCycle Plus on a sturdy, level, non-slip surface, with at least 12 inches of clearance on all sides. Place a mat or rug under the bike to protect your carpet or flooring.
- Stop exercising immediately if you feel dizzy, lightheaded, or nauseous, or if you experience pain, tightness in your chest, irregular heartbeat, or extreme shortness of breath.
- Start with the lowest resistance level.
- Slowly increase the resistance, as well as your speed and workout duration.
- Drink plenty of water before, during, and after exercise.
- Do not sit or stand on the FlexCycle Plus.
- Do not use on a full stomach.

Operating Instructions

Scan Here →

Scan now to learn more about your FlexCycle Plus.

HOW TO PEDAL

1. Start pushing downward on the pedal when the pedal arm is at its highest position.
2. Stop pedaling when the pedal is at its lowest position.
3. Make sure to press downward with your feet while you are pedaling.

CREATE A CUSTOM CYCLING WORKOUT

Create a custom aerobic workout with your desired speed, intensity, and duration:

1. Adjust the pedal tension (see below) to your desired resistance level.
2. Place your feet flat on the pedals.
3. Begin pedaling at your desired speed. You can check your speed on the monitor. Speed is displayed in RPMs (rotations/strides per minute).
4. Keep an eye on the monitor to check your workout duration.

ADJUSTING THE PEDAL RESISTANCE/TENSION

The FlexCycle Plus has 8 levels of resistance (1-8). Level 1 is the lowest resistance level and provides the easiest pedaling. Level 8 is the highest resistance level and provides the most intense pedaling workout.

1. Turn the Tension Knob to the right or left to adjust the resistance level. Align the arrow on the knob to the tension level you would like to select.
2. Turn the knob to the right to increase the resistance level. Turn the knob to the left to decrease the resistance level.

USING THE CONTROL PANEL

MODE	INFORMATION DISPLAYED ON MONITOR	VALUE
CNT	Displays the count or number of strides in the workout	0 - 9999 Strides
SCAN	Displays each mode in turn: time, rpm, dist, cal, t-cnt	Varies
Time	Displays the duration of the workout	0:00 - 99:59 (HR:MIN)
RPM	Displays the current workout speed in strides/minute	0 - 999 Strides/Min
Dist	Displays the distance traveled in the workout	0 - 999.9 Mi or Km
Cal	Displays the number of calories expended in the workout	0.0 - 999.9 KCAL
T-Cnt	Displays the total number of strides (across all workouts)	0 - 9999 Strides Total
BATTERY	Displays only if the batteries need to be changed	N/A

Change the Mode



The top line on the display shows the "CNT" (the number of strides in the current workout). The bottom line shows the value of the selected mode.

To change the mode:

1. Press the blue **Mode button** to toggle through the modes: scan, time, RPM, distance, calories, and total count. Please see the chart below for a description of each mode.
2. The small black arrow at the bottom of the display shows which mode is currently selected.

Reset all Workout Values

1. Press and hold the **Mode button** for 3 seconds. Workout values will flash once, then reset.

Workout values automatically reset when they reach their maximum (for example, 999.9 miles) and when the batteries are replaced.

Switch between miles (M) and Kilometers (K)

1. Press and hold the **Mode button** for at least 6 seconds. Release the button after all of the workout values flash twice. A small M next to the count value indicates miles are selected. A small K indicates kilometers are selected.

Auto Shutoff

The monitor will automatically shut off after 2 minutes of inactivity. The monitor will automatically power on when you press the Mode button or begin to exercise.

TETHERING THE BIKE TO A CHAIR WHEN USING ON SLIPPERY FLOORS

The FlexCycle Plus comes with a long strap that can be used to tether the bike to a chair. Most users will NOT need to tether the bike; pedaling with downward force will prevent it from slipping on carpet and most other surfaces. To tether the bike when using it on a slippery surface:



1. Position the bike in front of a chair.
2. Sit in the chair and begin pedaling. Your feet should easily reach the pedals while sitting in the chair. Your knees should be slightly bent when the pedals are farthest from you.
3. Unbuckle the tether strap and route it around the FlexCycle Plus frame and around the chair as shown.
4. Pull the strap taut and re-connect the buckle.
5. Pedal the bike to make sure the distance is correct. Adjust if necessary.

Cleaning and Storage

1. Wipe down the FlexCycle Plus with a soft, damp cloth after each use. Do not use abrasive, solvent, or chemical cleaners or harsh detergents.
2. Store the device in a cool, dry location. Do not store in a garage or covered patio, or near water.
3. Remove batteries from the computer monitor if the FlexCycle Plus will not be used for a long time. Store the FlexCycle Plus and batteries in a cool, dry place.
4. Never remove the motor hood unless instructed to do so by an authorized service representative. Servicing other than the procedures in this manual should be performed by an authorized service representative only.
5. Never insert or drop any object into any opening.

Troubleshooting Guide

Quickly troubleshoot simple issues you might experience with your FlexCycle Plus using the table below. Please contact a customer support representative for additional assistance at *support@lifeprofitness.com* or (800) 563-6604. Please do not attempt to repair the device.

ISSUE	POSSIBLE REASON	HOW TO RESOLVE
Control panel is not working.	Batteries are dead.	Replace dead batteries with 2 new AAA batteries.
	Batteries are installed incorrectly.	Check to see if the batteries are installed in the correct direction.
The pedals came loose during use.	This can happen if the pedals were not properly tightened during assembly.	Stop using the machine immediately. Use the included hex key and wrench to fully tighten the nuts and bolts securing the pedals to the pedal arms.
There is a noise when pedaling.	The nuts and bolts attaching the pedals to the pedal arms are loose.	Stop using the machine immediately. Use the included hex key and wrench to fully tighten the nuts and bolts securing the pedals to the pedal arms.
	The nuts attaching the pedal arms to the FlexCycle Plus frame are loose.	Each pedal arm is attached to the frame with 2 nuts and bolts. Use the included hex key and wrench to tighten fully. Do not overtighten.
The pedals will not stay tightened or are stripped.	Using the machine when the pedals are loose will eventually damage the threads on the pedal arms. If caught early, tightening the bolts and nuts will solve the problem. However, if the threads become too damaged, the pedal won't stay tightened even after tightening the bolts and nuts.	If the pedals are stripped, please contact customer support for assistance.

Product Specifications

UNIT SPECS

Dimensions: 22.3 × 18.2 × 12.9 in | 56.64 × 46.2 × 33 cm	**Product Weight:** 28.9 lbs | 13.1 kg
Decibel Rating: 30-75 dB	**Batteries Required:** AAA (×2)

Made in China



From Our Vibration Collection:

Waver Vibration Plate

Take your wellness routine to the next level with the Lifepro Waver. This easy-to-use vibration platform supports your fitness goals by encouraging movement, muscle activation, and gentle stimulation–all with minimal impact.





Gentle, rhythmic vibrations help stimulate your body through repeated muscle engagement, making it a great tool for complementing your existing workout routine or recovery regimen.

Highlights:

- ENHANCES STABILITY
- FULL-BODY ACTIVATION
- LOW-IMPACT EXERCISE
- CUSTOM INTENSITY

Built for Flexibility

Includes mini bands and resistance bands for a variety of workout options, from light stretching to upper-body resistance moves.

Safety Instructions

Before using this product, read all safety warnings and operating instructions. Failure to do so may result in serious injury or death, or damage to the product or property. ***Keep this manual for reference.***

INTENDED USE

- **This product is not intended to be used:**
  - By more than one person at a time.
  - While in a standing position.
  - Outdoors.

WARNING:

To reduce the risk of burns, fire, electric shock, injury to persons, or damage to equipment, read the following important precautions and information before operating the FlexCycle Plus.

DISCLAIMER

- The health benefits suggested or implied in this manual, other product literature, and website are not certified or endorsed by any regulatory authority or medical institute.
- The use of this product is entirely at the user's discretion. Please read all instructions and safety information carefully before using this product. We assume no responsibility for personal injury or property damage sustained by or through using this product.

RESPONSIBILITIES

WARNING:

To ensure the safety of users, always ensure all pedals, nuts, and bolts are securely tightened before exercise.

- Always inspect the device for damage before each use. Do not use if damaged, worn, malfunctioning, or if the unit has been exposed to water. Do not use device again until the problem has been fixed.
- Use the FlexCycle Plus only as instructed in this manual.
- It is the responsibility of the owner to ensure that all users of the FlexCycle Plus are adequately informed of all warnings and precautions.
- Place the unit on a sturdy, level, non-slip surface, with at least 12 inches of clearance on all sides. Place a mat or rug under the FlexCycle Plus to protect your carpet or flooring. Ensure that the underlayment does not slide around before beginning exercise.
- During assembly, it is recommended that you place parts and hardware on a mat to avoid soiling carpet or flooring.
- Keep the FlexCycle Plus indoors, away from heat, moisture, and dust. Do not use outdoors. Keep away from open flame, explosive or flammable items, and heat sources.
- Replace the batteries only with new AAA batteries.
- Do not ingest the batteries. If the batteries have been ingested, seek medical help immediately, as this can cause internal burns or even death.
- Dispose of the FlexCycle Plus, batteries, and all parts according to local regulations.
- Keep children and pets away from the FlexCycle Plus at all times. For adult use only.
- Adults with diminished mental or physical capacity may only use the FlexCycle Plus while supervised by a responsible adult.
- Do not stand on the pedals. Only use the FlexCycle Plus in a seated position.
- Do not exceed the maximum weight capacity of 110 lbs. per pedal.
- Do not allow more than 1 person to use the FlexCycle Plus at a time.

EXERCISE SAFETY

- Before starting any exercise program, consult with a medical professional to determine if you have any health conditions that could create a risk to your health and safety, or prevent you from using the FlexCycle Plus properly. Your doctor's advice is essential if you are taking medication that affects your heart rate, blood pressure, or cholesterol level.
- Stop exercising immediately if you feel dizzy, lightheaded, or nauseous, or if you experience pain, tightness in your chest, irregular heartbeat, or extreme shortness of breath. If you experience any of these symptoms, consult your physician before continuing your exercise program.
- Incorrect or excessive exercise can be damaging to health. Always exercise within the heart beat range and time limits recommended by your physician.
- Always wear appropriate athletic clothing, socks, and athletic shoes when using the FlexCycle Plus. It is especially important to wear well-fitting shoes.
- Do not wear loose or baggy clothing which may get caught in the equipment or restrict or prevent movement.
- Do not use for more than 20 minutes at a time.
- The FlexCycle Plus is intended for in-home use only. Do not use the FlexCycle Plus in any commercial, rental, institutional, or therapeutic setting.



Lifetime Warranty

Lifepro Fitness creates quality, durable exercise products and we stand by that quality with a lifetime warranty on all of our products.

If your product ever breaks (and we doubt it will), we'll send you replacement parts and show you how to repair it. If the product cannot be repaired, we'll replace it–free of charge.

Register the FlexCycle Plus at *flexcycleplus.lifeprofitness.com* to activate your warranty within 14 days of purchase.

FlexCycle Plus™

Exercise Bike

LOW-IMPACT FITNESS

SIT. PEDAL. THRIVE.



ENHANCES GLUTE TONE AND SHAPE



SUPPORTS FITNESS



BUILDS LOWER BODY STRENGTH



FEEL STRONG AND BALANCED

lifepro®

Congratulations on your purchase!

We're excited to be part of your wellness journey.

Scan the QR code to enjoy 15% off your next Lifepro® product.

Meet Our Best Seller!

Waver Vibration Plate

Support movement, strength, and recovery from day one–whether you're warming up, cooling down, or establishing a steady fitness routine.



Low Impact, High Efficiency

The Waver adapts to your pace and goals, helping activate muscles, enhance stability, and keep you moving. Whether you're a seasoned athlete or just getting started, this powerful platform empowers you to build a balanced, active lifestyle–one invigorating vibration at a time.

*Discount valid on purchases of $150 or more.

Lifeprousa Lifeprousa support@lifeprofitness.com

LP2.264