MERACH

POWERED BY MERACH

USER MANUAL

MERACH MR-S27 Under Desk Bike

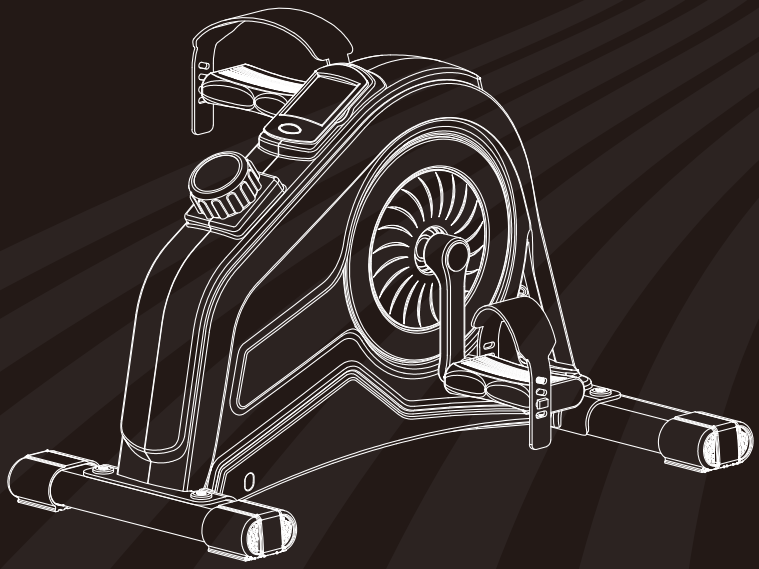

Questions or Concerns?

IMPORTANT!

Please read all details before use, and keep this user manual for future reference.

PLEASE CONTACT US BEFORE THE RETURN: Mon-Fri,9:00 am-5:00 pm PST/PDT

support@merach.com

MERACH



WHO WE ARE

Our customers aren't just important; their health, fitness, and pure enjoyment for live is at the core of everything we do at MERACH. From innovative fitness research and cutting-edge product development, to our exceptional purchasing & after-sales service. we are our customers' life-long partner in crafting a better fitness future.

Through quality fat-burning & muscle-building fitness equipment such as our quality rowing machines and exercise bikes, plus our innovative MERACH APP, and diqital courses, we give the opportunity and support to all to pursue their health and fitness goals and discover a new way of healthy living

Welcome to MERACH

Contents

Safety Instructions.....01

Parts List.....03

Parts Tool List.....04

Assembly Guide.....05

Product Usage Instructions.....07

Monitor Instructions.....08

Instructions for [MERACH] App Connection and Use.....09

Warm-up.....10

Warranty Information.....11

This device contains a radio transmitter module with type approval code
FCC ID：2A6QWMR-BLE001 IC：29678- MRBLE001 HVIN: MRBLE001



Please read the entire manual carefully before installing and using the bike, and save for further use.

Safety Instructions

Please keep this manual in a safe place for future reference.

- It is very important to read the entire manual thoroughly before installing and using the machine. Safe and effective training can only be achieved if the machine is properly assembled, properly maintained and used. Make sure all users are familiar with all warnings and precautions of this machine.

- Please consult your physician to determine if you have any medical or physical conditions that could put your health and safety at risk or prevent you from using the equipment properly. Your physician's advice is essential if you are taking medication that affects your heart rate, blood pressure, or cholesterol level.

- Please always pay attention to your body signals, improper use of the machine may affect your health. If you experience any symptoms (including headache, chest pain, irregular heartbeat, shortness of breath, dizziness, or any discomfort), stop exercising immediately and consult your physician, get the permission before training again.

- Always keep children and pets away from the machine. The machine is for adult use only.

- Please use this machine on stable and horizontal ground level, and put a protective layer on the floor or carpet to prevent a floor from damaging. Make sure the distance between the machine and each obstacle is at least 1.6 ft (0.5m).

- Please check all screws and nuts are properly tightened before using the machine.

- The safe use of the machine can only be guaranteed if the regular maintenance and repairs of undertaken, and worn out and broken parts are changed.

- Please follow the instructions in this manual to use this machine. Please stop using and operating immediately when you find any defective parts or hear any abnormal sound.Make sure all issues are resolved before using it again.

- Please wear sports clothes, sports shoes, or other proper clothes. Loose-fitting clothing is not recommended, as loose clothing may get caught in the machine, hindering operation and possibly causing an injury.

- This machine is only for home use. The Maximum user weight is 265 lbs.

Safety Instructions

- This machine is not for professional medical treatment.
- This product is only for family use.
- The overall performance of the machine and all moving parts must be checked regularly to ensure the safety of the machine.
- If the moving parts are damaged, please do not use the machine until the parts are repaired.
- Keep the children away from the machine. The equipment is not for children to use or play with. They can injure themselves accidentally.

Care & Maintenance

- Do not store the machine in a place exposed to direct sunlight, wind and rain, or with high humidity. If needed, please pack the machine to keep children away from touching or playing with it.
- Please check if there's rust or cracks after long-term storage.
- Please understand that for the consumable parts, the wear and tear may also occur even with proper maintenance.
- For long-term use of this machine, please wipe the dust regularly. Do not water it directly, or wipe with gasoline, abrasive powder, etc. Otherwise, it might cause cracks on the parts or main body, electric shock or fire. Please use Dilute neutral detergent for maintenance.



Before starting any training, please consult your physician, especially for those who are over 35 years old or with pre-existing health conditions. Please read all instructions before using the machine.

Parts List

Please check if all the parts and tools are in the package.

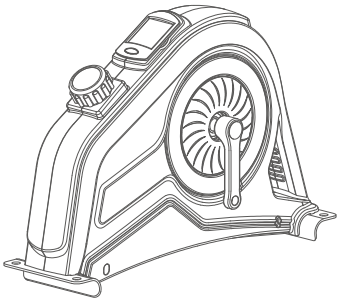

(1) Main frame

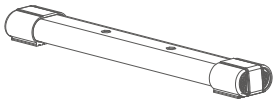

(2) Front Stabilizer

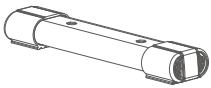

(3) Rear Stabilizer

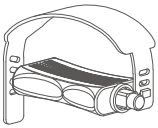

(20L) Left Pedal



(20R) Right Pedal

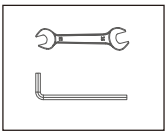

Parts Tool Kit



Manual

Parts Tool List

Please check if all the parts and tools are in the package.

Step 1:



(42) Hexagonal wrench S6x1

Step 2:



(43) Open-end wrench 13-15x1

Tips | Scan QR code to watch installation video

Step 1: Install the front and rear legs

1. Remove the four step screws M8*24L(24) pre-locked on the foot tube with hexagon wrench S6(42).
2. Align the front leg (2) and rear leg (3) with the holes of the mainframe (1) as shown, then lock the step screws M8*24L (24) and lock the screws with hexagon wrench S6 (42).

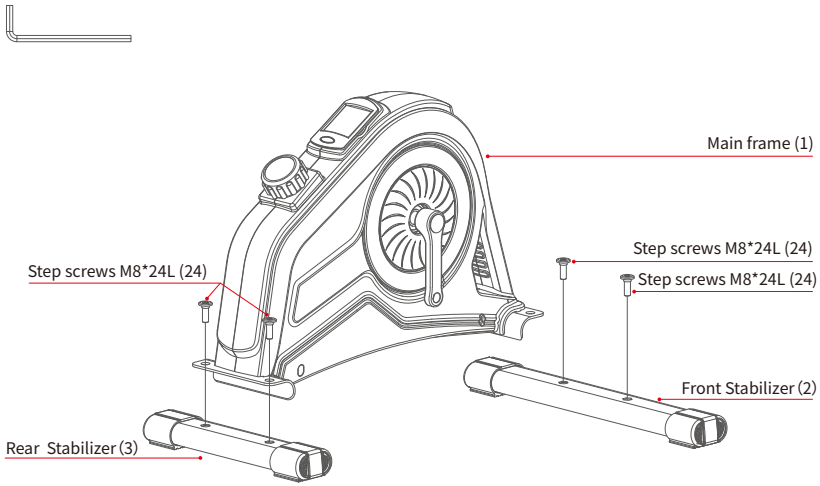

Step 2: Install the left and right pedals

1. Adjust and install the strap to the pedal as shown.

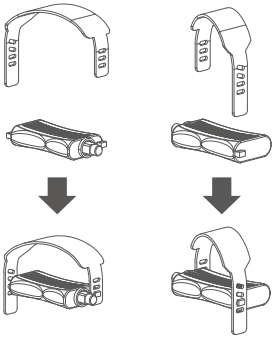

2. Turn the right pedal (20R) in the direction of the arrow and lock it to the right crank (17R) by hand, then use open-end wrench 13-15(43) to lock the right pedal (20R) tightly.

3. Turn the left pedal (20L) in the direction of the arrow and lock it to the left crank(17L) by hand, then use open-end wrench 13-15(43) to lock the left pedal (20L) tightly.

Note: Before assembling the pedal, please make sure to distinguish between the left and right to avoid damaging the threads inside the pedal and crank, there are stickers on the top of the pedal L (for left) and R (for right).

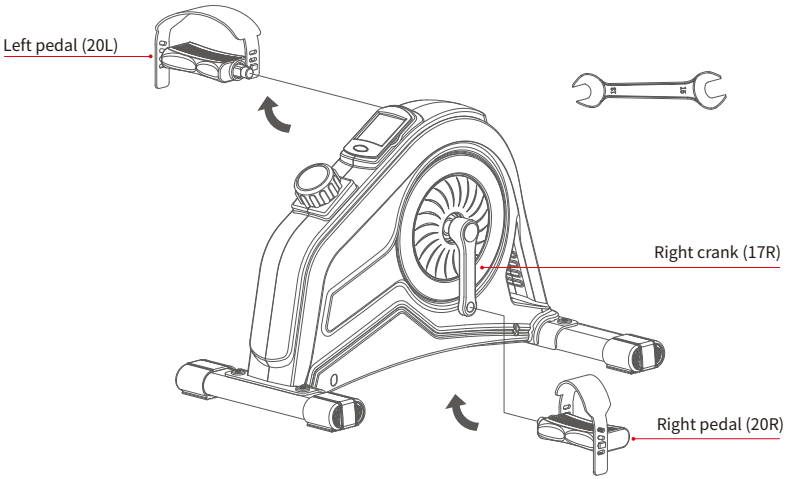

Resistance adjustment

Users can adjust their own gears according to the needs of exercise, the product provides 8 levels of adjustment, as shown in the figure.

Clockwise rotation is to gradually increase the resistance.

Counterclockwise rotation for gradually decreasing resistance.

The maximum resistance of the number 8, the minimum resistance of the number 1

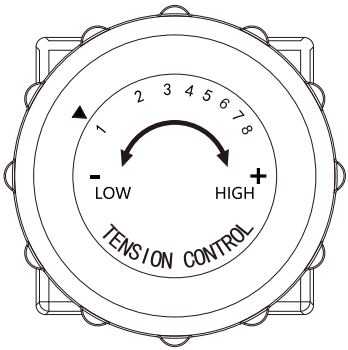

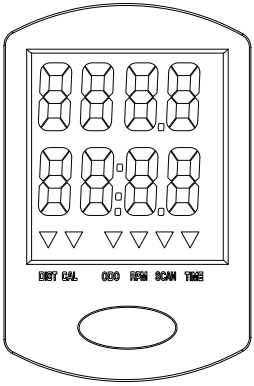

Function

Time ----------00:00-99:59 minutes
Speed ----------99.9 mph
Distance ----------0.00-999.9 mile
Calories ----------0.0-999.9 kcal
ODO ----------0.0-9999 mile
RPM ----------0-999 times per minute

Button

Mode: Press this button to select the desired function, long press for 4 seconds will zero the data after full display (except odometer).
When there is no signal input to the monitor, it will enter sleep mode after 4 minutes, and can only be woken up by movement or pressing the button again, and keep the data before sleep after waking up.

Function Description

① Time-Display the time of exercise.
② Speed-Displays the average speed per hour during exercise.
③ Distance-Displays the distance during exercise.
④ Calories-Displays the number of calories burned during exercise.
⑤ODO-Display the total distance since battery installation.
⑥ RPM-displays the average speed per minute of exercise.
⑦SCAN-Display changes according to the next diagram every 5 seconds.
⑧Automatically display of the following functions in the order shown-
TIME---DISTRANCE---CALORIE---ODO---RPM

Battery: When you see the display is blurred and unclear, please replace 2 AAA batteries in time.

Monitor instructions

Suggest the best exercise program: 10-15 minutes per use, at least three times a week

Download and use of MERACH

* **Our customer can get a 180-day MERACH membership. Please contact us through support@merach.com after receiving the product to get an exclusive redemption code. Please include your order ID and MERACH app Username.**

1. To download the MERACH app, scan the QR code or search "MERACH" in the Apple App Store® or Google Play Store.

MERACH APP Download

APP Connection Guide

GET IT ON Google Play

Available on the App Store

2. Open the MERACH app. Log In or Sign Up.
3. Follow the in-app instructions to set up your device.

Do stretches before exercising. Warm muscles are easier to stretch, so start with a 5-10 minute warm-up, then do some stretches shown below - 5 times, 10 seconds or more per leg. Do it again after the workout.

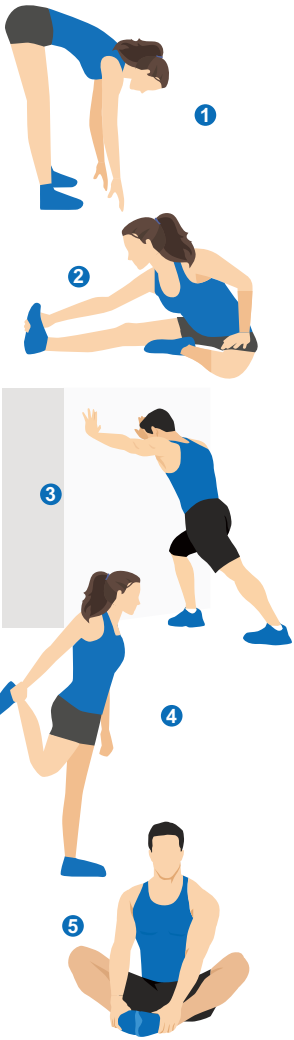

1. Stretch down

Bend your knees slightly, slowly bend your body forward, relax your back and shoulders, and try to touch your toes with your hands. Hold for 10-15 seconds, then relax.
Repeat 3 times (see Figure 1).

2. Seated hamstring stretch

Sit with one leg straight. Bring the other leg in so that it is snug on the inside of the straightened leg. Try to touch your feet with your hand's toe. Hold for 10-15 seconds, then relax.
Repeat 3 times for each leg (see Figure 2).

3. Calf and Achilles tendon stretch

Stand with both hands against the wall or a tree, put one foot behind another. Keep the back leg straight and your heel on the ground, lean toward a wall or a tree. Hold for 10-15 seconds, then relax. Repeat 3 times for each leg (see Figure 3).

4. Quadriceps stretch

Reach back with your right hand, grab your right foot and slowly pull it toward your hips until you feel the muscles in the front of your thigh tense.Hold for 10-15 seconds, then relax.
Repeat 3 times for each leg (see Figure4).

5. Sartorius (inner thigh muscle) stretch

Sit with your feet facing each other and your knees facing out. Grab your feet with both hands and pull toward your groin.
Hold for 10-15 seconds, then relax.
Repeat 3 times(see Figure5).

Warranty Information

Product Name	MERACH Under Desk Bike
Model	MR-S27
Default Warranty Period	12 Months
For your own reference, we strongly recommend that you record your order number and date of purchase.	
Date of Purchase	
Serial Number	

Terms & Policy

The MERACH products are premium in material, craftsmanship, and service. MERACH 1-year limited warranty is effective from the date of purchase.
MERACH will replace defective products based on eligibility. Refunds are available to the original purchasers of our products within the first 30 days of purchase. This warranty extends only to personal use, doesn't apply to the commercial, rental, or any other uses for which the product is not intended for. There are no warranties other than the warranties expressly set forth with each product.

This warranty is non-transferable. MERACH is not responsible for any damages, losses or inconveniences caused by equipment's failure, user's negligence, user's abuse, or improper operation that does not follow the included user manual.

This warranty does not apply to the following situations:

- Damage due to abuse, accident, alteration or vandalism.
- Improper or inadequate maintenance.
- Damage in return transit.
- Unsupervised use by children under 18 years old.

MERACH and its subsidiaries are only responsible for damages caused by the intended use or as instructed in the user manual. Some states do not allow this exclusion or limitation of incidental or consequential losses, so the above disclaimer may not apply to you. This warranty gives you specific legal rights and you may also have other rights, which may vary from state to state.

All expressed and implied warranties, including the warranty of merchantability, are limited to the period of the limited warranty.

MERACH

MERACH

@merachfit

@Merachfit

@Merachfit

@Merachfit

merachfit.com

Customer Service: support@merach.com
Official Website: merachfit.com