GEEVON Wireless Thermometer
Item No.T226150
User Manual
Thank you for purchasing T226150 Thermometer.Please take a moment to read this guide and store it for Future reference.

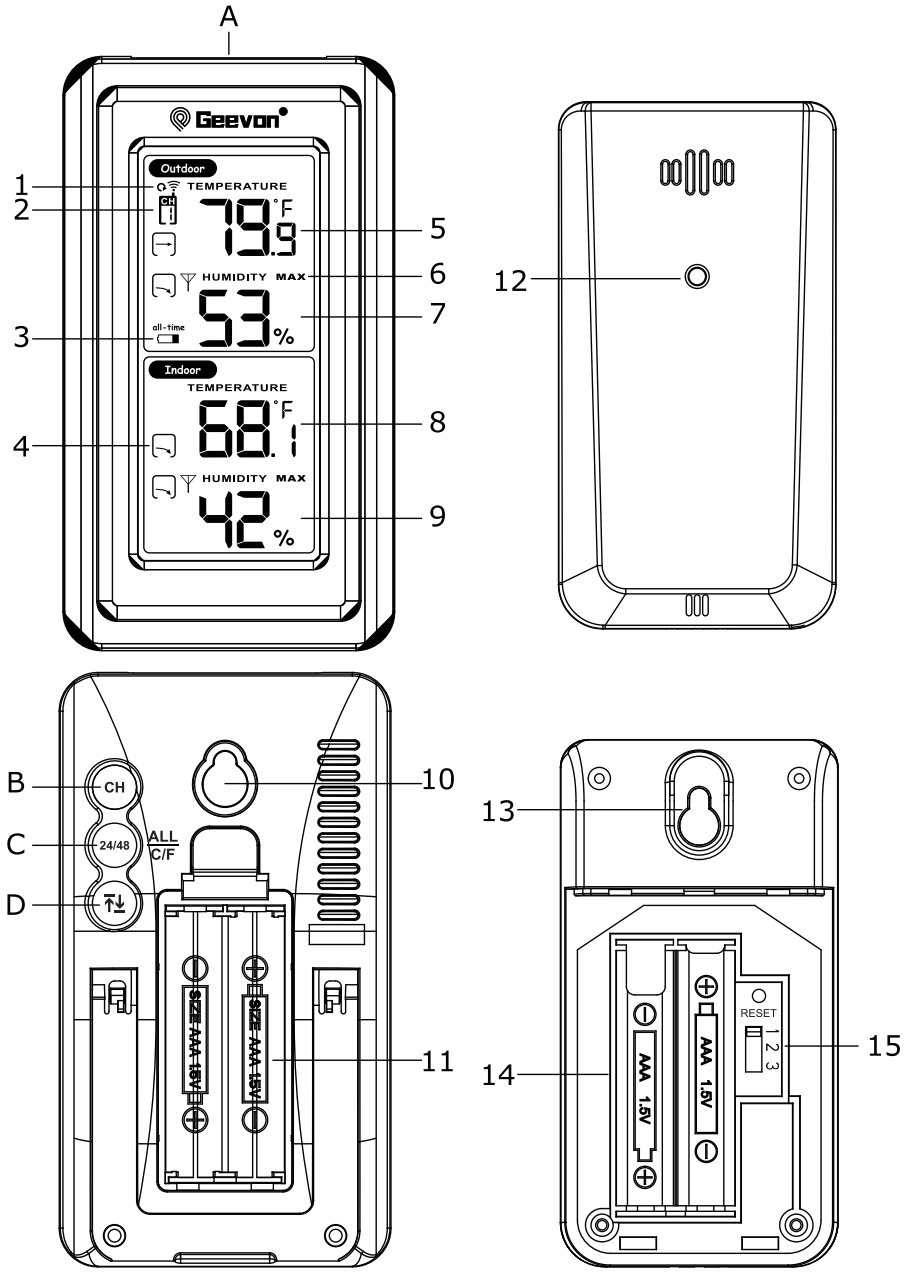

Displays and Controls

1.Channel Cycle Symbol
2.Channel Selection
3.Low Battery Indicator
4.Temperature Trend
5.Outdoor temperature
6.Maximum Temperature and Humidity
7.Outdoor Humidity
8.Indoor Temperature
9.Indoor Humidity
10.Hang Hole
11.Main Unit Battery (2*AAA)
12.Data Transfer Light (Data is transmitted to the main unit when it flash)
13.Sensor Hang Hole
14.Sensor Battery (2*AAA)
15.Sensor Channel Select Button

Buttons

A:LIGHT Button
B:CH Select Button
C:C/F/Today/48Hr/All-Time Button
D:Max/Min Display Button

Main Functions

1. Indoor Temperature Display:-10℃/14℉ ~ 50℃/122℉
2. Outdoor Temperature Display:-40℃/-40℉- ~ 60℃/122℉
3. Indoor/Outdoor Humidity Display: 10%-99%
4. Indoor/Outdoor Temperature Trend
5. Indoor/Outdoor Humidity Trend
6. Low Battery Indicator
7. Backlight
8. 3 Channels for RF Cycle Display
9. Today/48Hr/All-Time Outdoor/Indoor Temperature/Humidity History
10.Temperature Unit ℃/℉ Switch

Setting Up Power Supply Base Device

Proceed as follows:

1.Remove the battery compartment cover.

2.Insert the batteries into the battery compartment. Ensure that the battery polarity (+/-) is correct.

3. Replace the battery compartment cover.

Remote sensor

1.Remove the battery compartment cover.

2.Insert the batteries into the battery compartment. Ensure that the battery polarity (+/-) is correct.

3.Set the channel selector switch to the desired channel.

4. Replace the battery compartment cover.

NOTICE!

This thermometer can be operated with 3 remote sensors. Each remote sensor being connected must be operated on a different channel. If only one remote sensor is connected, it should be operated on channel 1.

Channel Select

1.In normal mode, press the CH button to select Channel 1, Channel 2 or Channel 3. Hold the CH button for approx. 3 seconds to reset values and search for an RF signal.

2.When you keep pressing this button until the circle symbol appears,the thermometer will show three-channel loop display.

NOTICE!

Always make sure the channel chosen on the display unit matches the channel option chosen on the outdoor sensor.

℃/℉ Switch/Today/48Hr/All-Time History

1.In normal mode, hold and press this button for approx. 3 seconds to switch the temperature unit ℃/℉

2.Press this button to switch the display of today/48hr/all-time history

MAX/MIN Temperature and Humidity

1.In normal mode, press this button to check the max/min temperature and humidity history

2.Press and hold for 3 seconds to clear the current temperature and humidity history

Backlight

When connect with batteries, press the LIGHT button to light up the screen. The lights will keep 8 seconds .

Technical Data

Main unit

Batteries: 2xAAA Battery (Not Incl)

Temperature measuring unit: °C / °F

Temperature display range: 14℉-122℉

Humidity display range: 10% - 99%

Remote sensor

Batteries: 2x AAA Battery (Not Incl)

Temperature measuring range: -40℉-122℉

Humidity display range: 10% - 99%

Transmission range: 100 m