Assembly Instructions

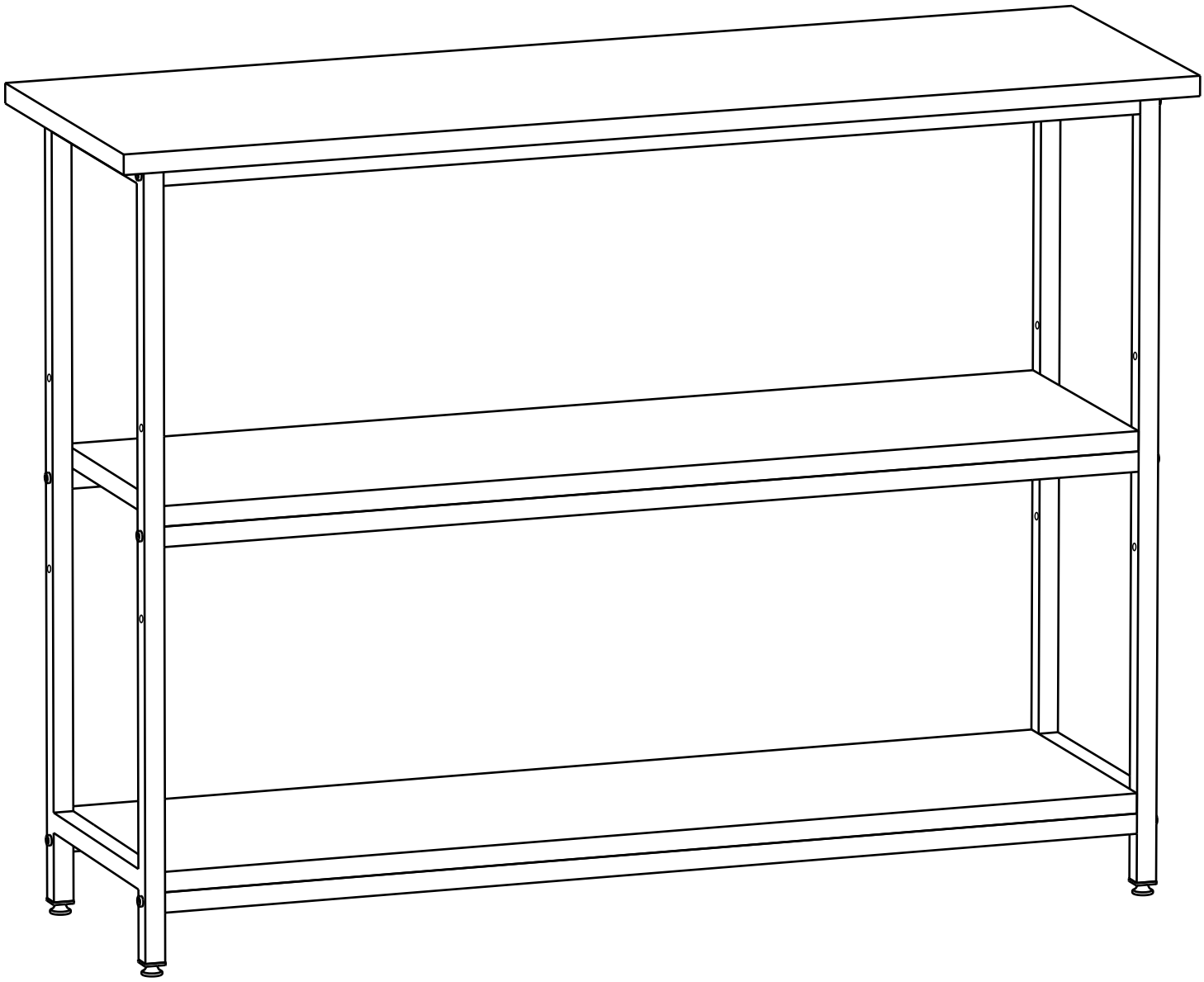

Accessories List

A

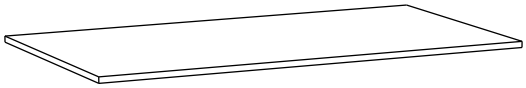

B X2

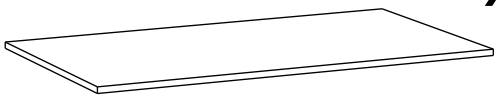

C X2

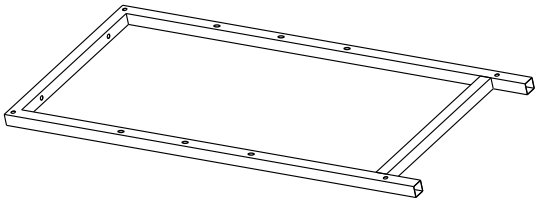

D X6

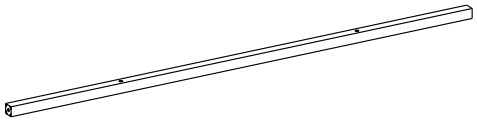

① 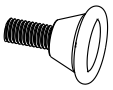 X4

② 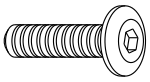 M6x30 X28

③  X1

Installation Tips:

Please don't tighten the screws completely and go back later for a final tightening of all the screws after pieces are aligned with each other.

1

A*1;D*2
②*4

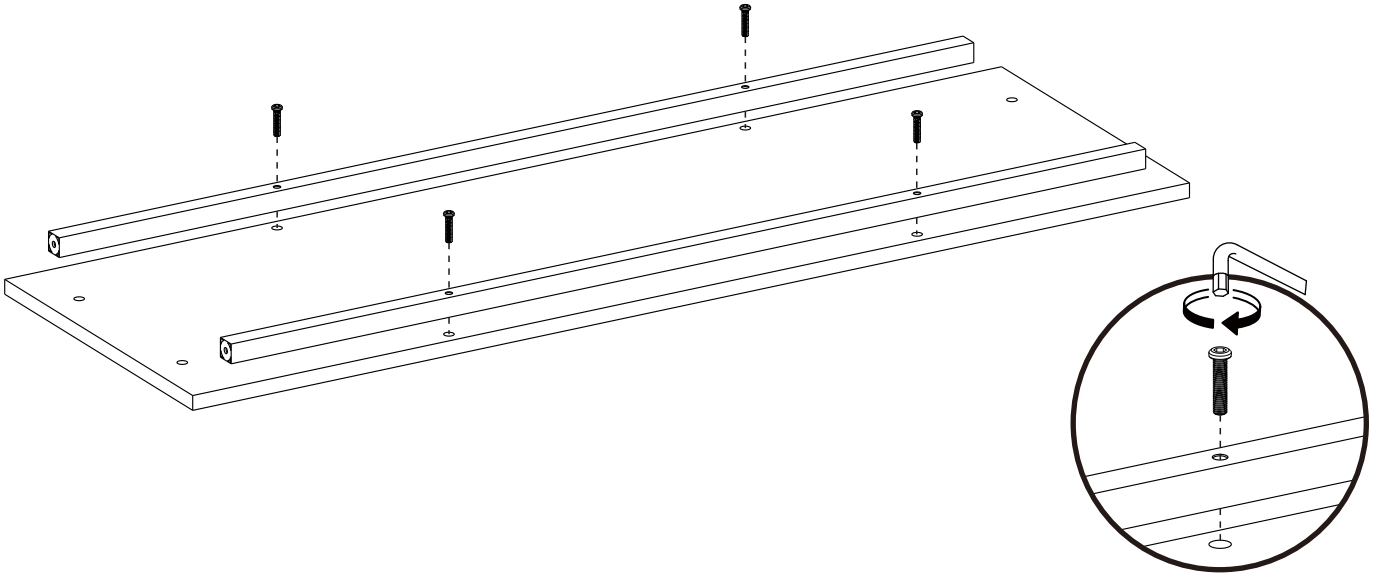

2

C*2
①*4;②*8

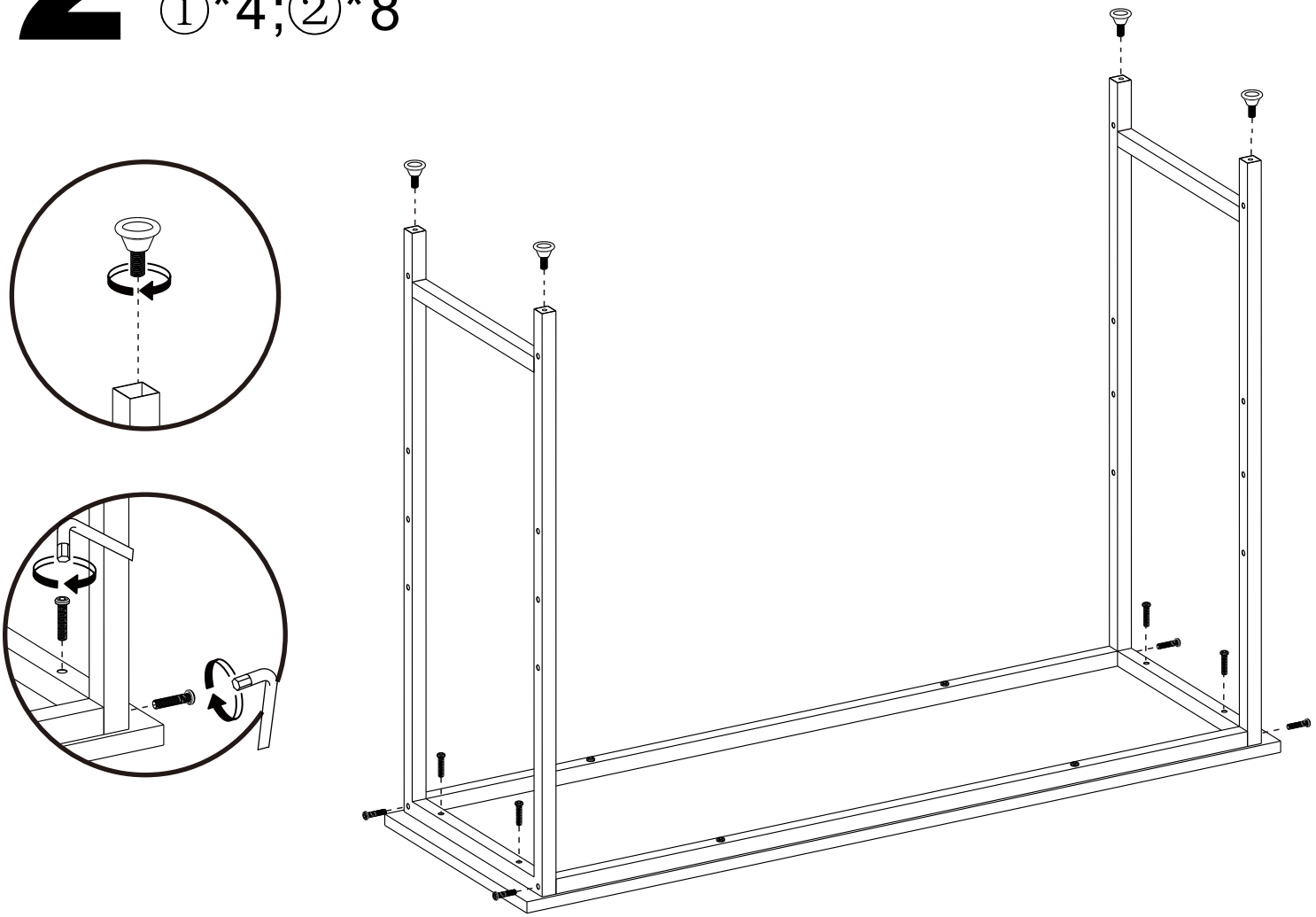

3

B*2;D*4
②*8

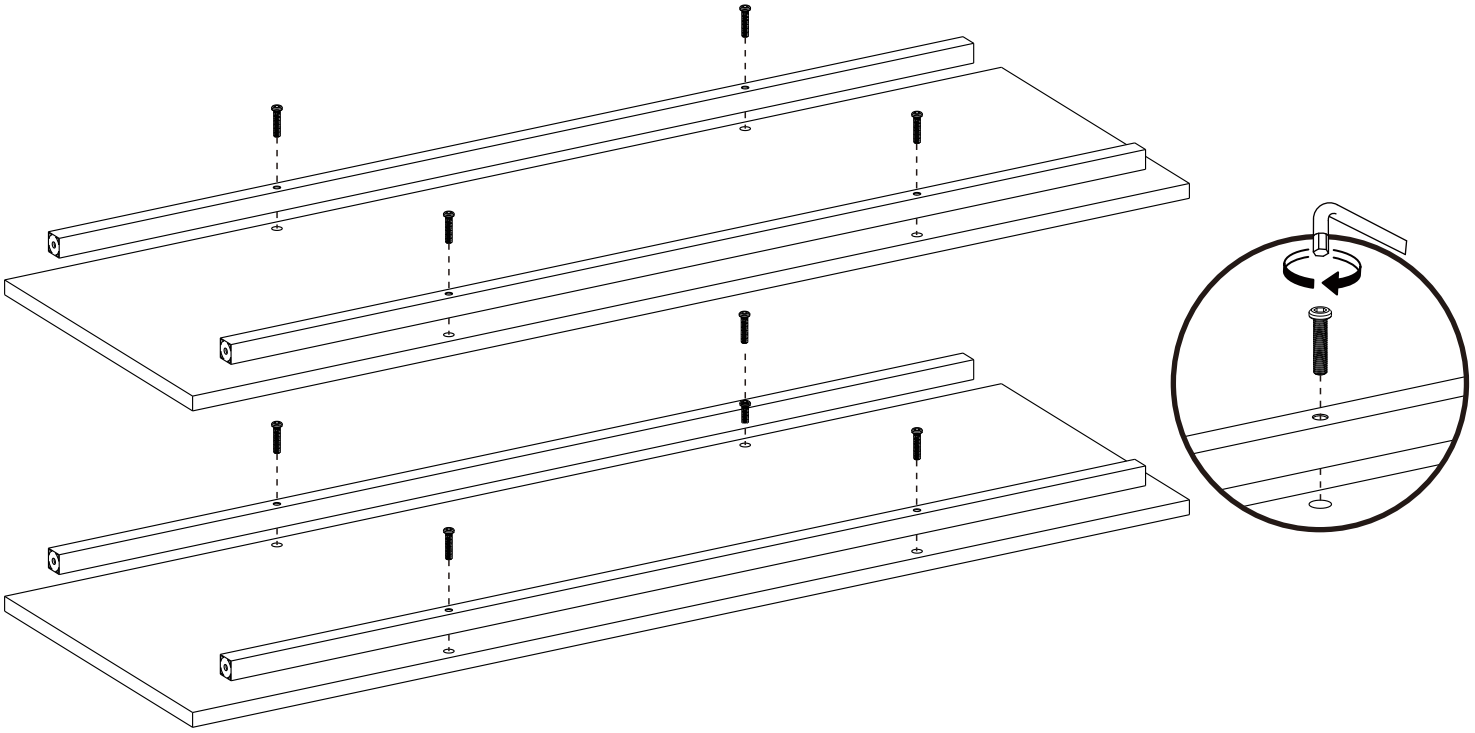

4

②*8

