READY, SET, PRO

USER MANUAL

PAWRUNNER PET TREADMILL

lifepro®

Regular exercise has enormous benefits for your pet's body, brain, and mental health.

Many pets, especially dogs, need daily exercise for optimal health.

HELLO THERE.

Joel and I are athletes who suffered from severe ACL injuries a few months apart. We purchased multiple pieces of exercise equipment for our in-home rehab but were left disappointed and frustrated by fitness gear that made big promises but gave no support, no well-thought-out plan to follow, and no results. And that's how Lifepro came about, and why the Endurance Training collection was created — we've set out to change all of that. It's why every piece of equipment bearing our name not only undergoes rigorous scrutiny to make sure it delivers on power and efficacy, but also comes with built-in support from our 'guiding angels' and a built-in lifetime warranty so that you're never left hanging.

Welcome to Lifepro.
We're in this together now.

Abe + Joel

With the Lifepro PawRunner Pet Treadmill, you can help your pet improve cardiovascular fitness, build muscle strength, and lose weight—all from the comfort of home. The PawRunner's ultra-quiet motor is designed specifically for in-home use.

The PawRunner is perfect for anyone who finds it difficult to take their pet for regular walks due to very hot or cold weather, rain or snow, busy streets, lack of parks or sidewalks, or a busy work or family schedule. The PawRunner is also ideal for pets that require high levels of exercise and mental stimulation.

It is estimated that half of dogs and cats are overweight or obese. If your pet is experiencing mobility issues, joint pain, high blood pressure, or diabetes due to being overweight, combine a nutritious, portion-controlled diet with regular walks on the PawRunner treadmill to help them reach a healthy weight.

The PawRunner treadmill has a speed-range of 0.5–7.5 mph. Twelve preset exercise programs provide your pet with endless workout challenges. Three countdown modes allow you to set specific workout goals such as distance walked, workout duration, or calories burned. With the Lifepro PawRunner, your pet can walk or run to improved strength, stamina, and cardiovascular health. See results in as little as 15–20 minutes a day.

Redefine your workouts and experience the transformative power of the Lifepro PawRunner:

- **Increase strength & stamina:** improves stability and muscle tone
- **Regulate weight:** boosts your heart rate and burn calories.
- **Decrease chronic pain:** improves core strength & circulation
- **Boost your metabolism:** encourages your body to burn fat faster
- **Decrease your stress:** increases serotonin and decreases cortisol
- **Lower blood pressure:** improves circulation
- **Develop stronger bones:** increases bone density

Check out the information in this manual for ways to get started using your PawRunner. Next, be sure to visit our website **pawrunner.lifeprofitness.com** for access to our **FREE library of workout videos** which demonstrate how to easily incorporate the PawRunner into your pet's fitness routine.

GET STARTED

ENDURANCE TRAINING
PAWRUNNER
PET TREADMILL

WHAT'S IN THE BOX

A. Treadmill Baseframe
B. Baseframe End Caps (2)
C. Crossbar
D. Velcro® Strips (10)
E. Left Sidebar
F. Right Sidebar
G. Left Fabric Side Panel
H. Right Fabric Side Panel
I. Console and Adjustment Post
J. T-Knob
K. T-Knob Post
L. M6×6mm Socket Head Screws (6)
M. Curved Washers (6)
N. Hex Key
O. Magnetic Safety Key
P. Bottle of Maintenance Oil
Q. Remote Control
R. User Manual

FIRST STEP

1. Remove all packaging from the treadmill baseframe, parts, and hardware. **Have someone to assist you with lifting the treadmill baseframe from the packaging, it is heavy and bulky.**
2. Confirm that all parts and hardware listed above are included.
3. Read carefully through this user manual, especially **USING THE MAGNETIC SAFETY KEY** on page 9 , **GETTING YOUR PET READY** on page 20, **PET EXERCISE SAFETY** on pages 23–25, and **SAFETY INSTRUCTIONS** on pages 44–46 before assembling and using the treadmill.
4. Go to **pawrunner.lifeprofitness.com** and register your product within 14 days of purchase to activate your lifetime warranty.
5. Complete the steps in the **10-MINUTE ASSEMBLY GUIDE** on page 11 to assemble your PawRunner.
6. Then, see **GETTING YOUR PET READY**, **EXERCISE RECOMMENDATIONS**, and **OPERATING INSTRUCTIONS** to get started using the PawRunner.

CUSTOMER SUPPORT

If you have any questions about assembling and using your PawRunner treadmill, we're here to help. Call or email us and an experienced customer support representative will be happy to assist you: **support@lifeprofitness.com** or **(732) 456-6063**.

GET ACQUAINTED

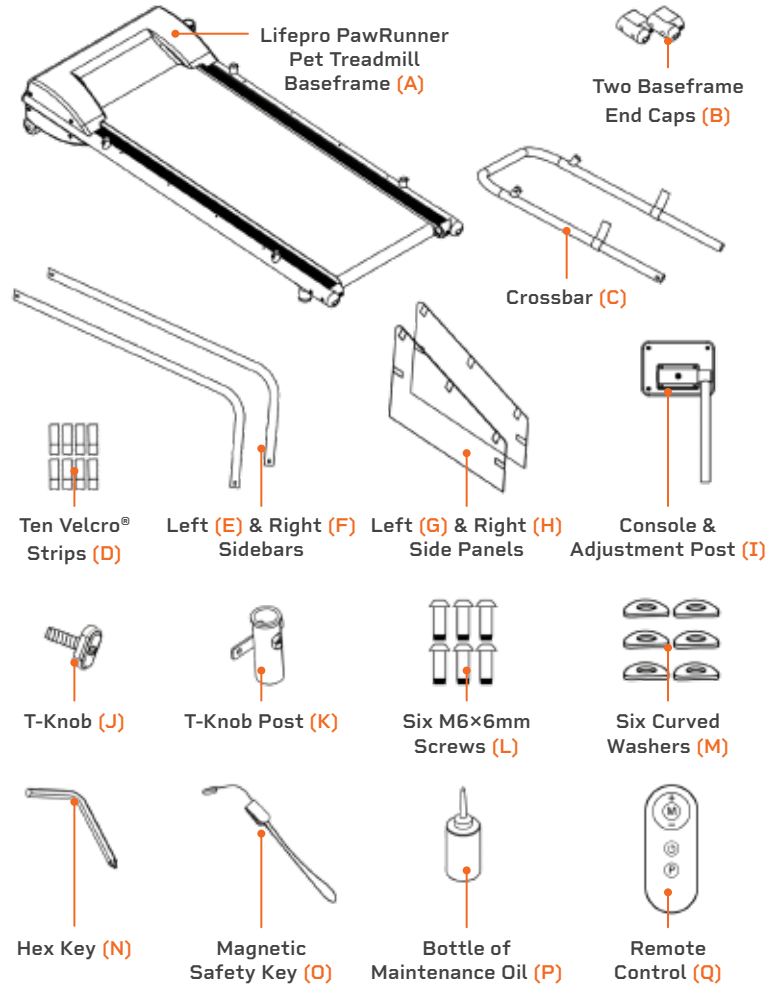

PARTS OF THE PAWRUNNER

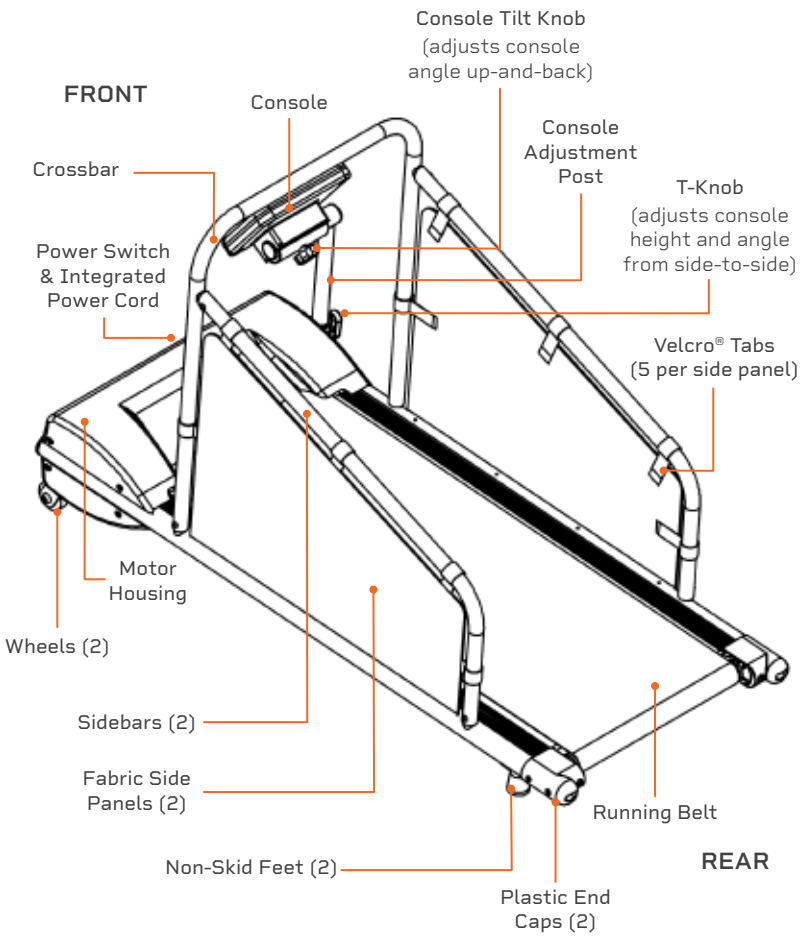

USING THE MAGNETIC SAFETY KEY

THE MAGNETIC SAFETY KEY

⚠ The safety key MUST be in place before the treadmill can be used.

The error code "Err" or "E00" will show on the console until the magnetic safety key is in place on the magnetic port on the treadmill console. If the safety key is removed from its port during use, the treadmill will stop automatically and cannot be restarted until the safety key is back in position. This safety feature causes the treadmill to stop immediately in the event your pet trips, falls, or another emergency occurs.

WHAT TO DO IN AN EMERGENCY

⚠ WARNING: You must clip the magnetic safety key to your pet's collar every time the treadmill is used.

- Stop the treadmill immediately if you realize that your pet cannot keep up with the pace, or if any other emergency arises.
- Pulling the cord will remove the magnetic safety key from its port; this will cause the treadmill to stop immediately.
- Make sure that all third parties are familiar with all safety instructions in this manual and that they always use the magnetic safety key correctly.

DISABLING THE PAWRUNNER FOR SAFETY

To prevent the treadmill from being used by unauthorized third parties, always remove the safety key when you have finished using the treadmill. Keep the safety key stored in a separate place, out of the reach of unauthorized people, especially children.

SAFE PLACEMENT OF THE TREADMILL

SAFE PLACEMENT OF YOUR PAWRUNNER TREADMILL

- Use the treadmill in a well-ventilated room and avoid using in rooms that are too warm to prevent heat exhaustion and heat stroke.
- Set up the treadmill with at least 7 feet of clearance from walls and furniture at the back and at least 4 feet of clearance at the front and sides of the treadmill. Never place the treadmill with the back of the running belt against a wall, door, stairs, or any other obstruction.
- Do not use outdoors or in high-moisture, high-temperature, or high-dust environments.
- Only operate and store the PawRunner on a flat, non-slip floor.
- Ensure the running deck is level to the ground. If the deck is positioned on an uneven surface, it could cause damage to the electrical system.
- If setting up in a carpeted room, check underneath the treadmill to ensure clearance between the carpet and the running deck. If there is not enough clearance, or you're not sure, place a mat or rug under the PawRunner. Ensure the mat or rug is at least 55" × 30" and will not slip during use.
- Sometimes after an extended amount of use, you will find a fine black dust under the treadmill. This is normal wear and does not mean there is anything wrong with the treadmill. The dust can be easily vacuumed up. If you wish to prevent the dust from getting on your flooring or carpet, place a mat or rug under the treadmill.

10-MINUTE ASSEMBLY GUIDE

1 INSTALL THE BASEFRAME END CAPS

You will need: treadmill baseframe (A), 2 end caps (B), hex key (N)

1. Lay the treadmill baseframe (A) on a flat, non-slip floor.
2. Locate the four screws on the outside-rear of the treadmill baseframe. There are two screws above each of the two non-skid feet.
3. Use the hex key (N) to remove the two screws on the left side of the baseframe.
4. Align one plastic end cap (B) with the two screw holes.
5. Re-insert the two screws to secure the end cap.
6. Repeat 2–5 above to install the second end cap to the right side of the baseframe.
7. Use the hex key (N) to fully tighten the screws.

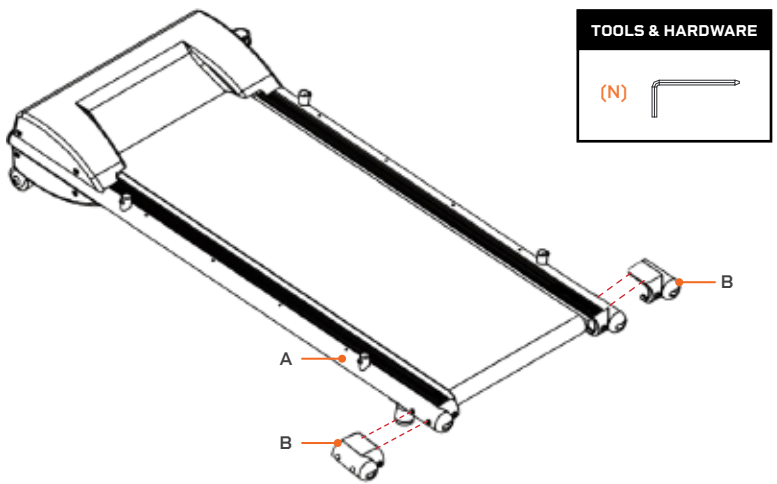

2 ATTACH VELCRO® STRIPS TO THE CROSSBAR

You will need: crossbar (C), 2 Velcro® strips (D)

1. Loop one Velcro® strip (D) around the left side of the crossbar (C) and one strip around the right side:
   - The smooth side of the Velcro® strip will face to the **INSIDE** of the treadmill. The hook and loop side of the Velcro® will face to the **OUTSIDE** of the treadmill.
   - Loop just enough of the Velcro® strip around the crossbar to be able to close the loop. The rest of the strip will extend straight out creating a Velcro® tab. This tab will be used to attach the fabric side panels.
   - Position the two loops a few inches from the base of the crossbar.
   - The loops should be loose enough that they can be repositioned along the crossbar, if necessary.

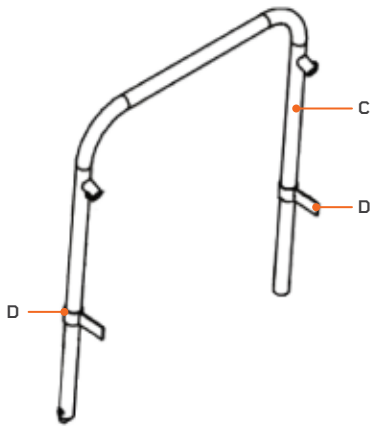

3 ATTACH THE CROSSBAR TO THE BASEFRAME

You will need: crossbar (C), 2 M6×6 screws (L), 2 curved washers (M), hex key (N)

1. Insert the base of the crossbar (C) onto the two round inserts on either side of the treadmill baseframe (A), just behind the motor housing.
2. Place a curved washer (M) onto one of the screws (L).
3. Insert the screw/washer combination through the screw holes on the left side of the crossbar (C) and into the baseframe (A).
4. Repeat 3–4 above to attach the right side of the crossbar to the baseframe.
5. Use the hex key (N) to fully tighten each screw.

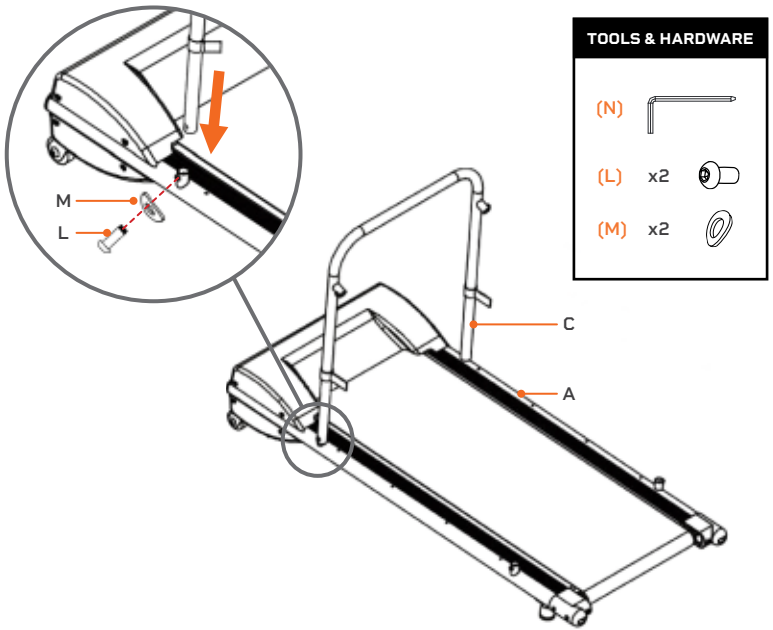

4 ATTACH VELCRO® STRIPS TO THE SIDEBARS

You will need: 8 Velcro® strips (D), left sidebar (E), right sidebar (F)

NOTE: The two sidebars are identical until the Velcro® strips are applied, then one will be the left sidebar (E) and the other will be the right sidebar (F).

1. Set one sidebar on the ground on the left side of the treadmill.
2. Loop four Velcro® strips (D) along the sidebar:
   - The smooth side of the Velcro® strip will face to the **INSIDE (RIGHT)** of the treadmill. The hook and loop side of the Velcro® strip will face to the **OUTSIDE (LEFT)** of the treadmill.
   - Loop just enough of the Velcro® strip around the crossbar to be able to close the loop. The rest will extend straight out creating a Velcro® tab. This tab will be used to attach the fabric side panels.
   - Position three loops along the long side of the sidebar and one loop on the short side of the sidebar.
   - The loops should be loose enough that they can be repositioned along the side panel, if necessary.
3. Lay the left sidebar (E) on the ground until the next step.
4. Set the second sidebar along the right side of the treadmill.
5. Loop four Velcro® strips (D) along the sidebar in the same manner:
   - The smooth side of the Velcro® strip will face to the **INSIDE (LEFT)** of the treadmill. The hook and loop side of the Velcro® strip will face to the **OUTSIDE (RIGHT)** of the treadmill.
6. Lay the right sidebar (F) on the ground until the next step.

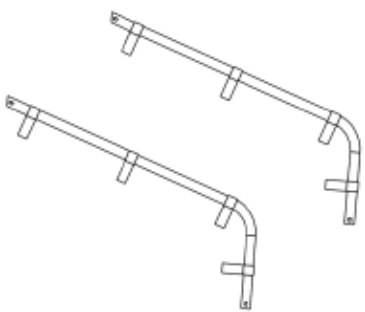

5 INSTALL THE SIDEBARS TO THE BASEFRAME

You will need: left sidebar (E), right sidebar (F), 4 M6x6 screws (L), 4 curved washers (M), hex key (N)

1. Insert the left sidebar (E) (the **Velcro® tabs face OUTSIDE/LEFT**) onto the rounded inserts on the left side of the crossbar and on the top of the baseframe.
2. Put a curved washer (M) onto one of the screws (L).
3. Insert the screw/washer combination through the screw holes in the left sidebar (E) and crossbar (C). Don't tighten the screw yet.
4. Place another washer onto another screw.
5. Insert the screw/washer combination through the screw holes in the sidebar (E) and baseframe (A). Don't tighten the screw yet.
6. Repeat 1–5 above to attach the right sidebar (F) to the right side of the crossbar (C) and baseframe (A).
7. Use the hex key (N) to fully tighten all four screws.

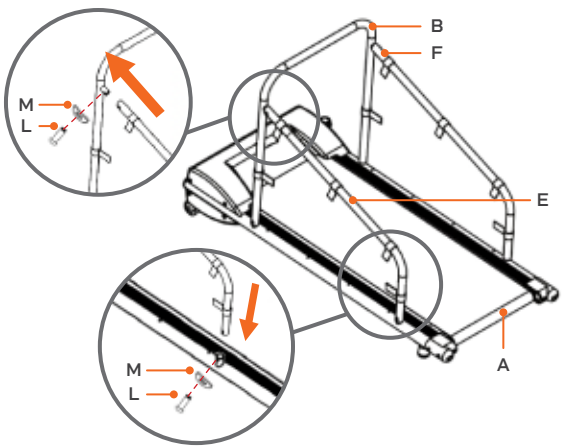

TOOLS & HARDWARE

(N)		
(L)	x4	
(M)	x4	

6 ATTACH THE FABRIC SIDE PANELS TO THE SIDEBARS

You will need: left fabric side panel (G), right fabric side panel (H)

1. Identify the left fabric side panel (G): the **Velcro® tabs on the backside of the fabric side panels face to the INSIDE.** The tabs on the backside of the left panel face **RIGHT**; the tabs on the backside of the right panel face **LEFT**. See figure below.
2. Stick the bottom strip of Velcro® on the back of the left fabric side panel (G) to the corresponding Velcro® strip along the left side of the baseframe (A).
3. Stick the five Velcro® tabs on the back of the left side panel (G) to the corresponding tabs on the left sidebar (E) and crossbar (C). Reposition the tabs along the sidebar and crossbar, if necessary to line up the Velcro®.
4. Repeat steps 2–3 to attach the right fabric side panel (H) in the same manner.

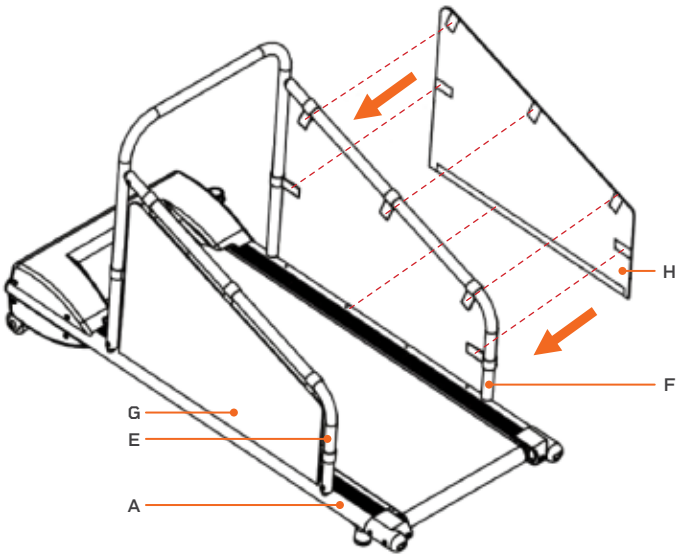

7 INSTALL THE T-KNOB AND T-KNOB POST

You will need: T-knob (J), T-knob post (K), hex key (N)

1. Screw the T-knob (J) clockwise into the threaded insert in the side of the T-knob post (K). Do not fully tighten the knob yet.
2. Locate the metal tube running along the right side of the treadmill baseframe (A).
3. Locate the two socket-head screws inserted into the metal tube towards the front of the treadmill.
4. Use the hex key (N) to remove the two screws.
5. Align the T-knob post (K) with the two screw holes. The lip on the T-knob post goes **UP**.
6. Re-insert the two socket-head screws to secure the T-knob post.
7. Use the hex key (N) to fully tighten the screws.

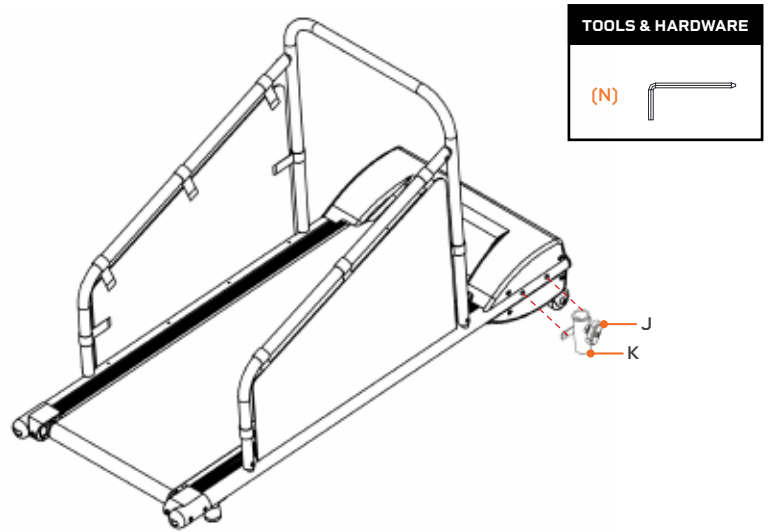

8 INSTALL THE CONSOLE

You will need: console and adjustment post (I)

1. Ensure the console cable exists the bottom of the adjustment post (I). Pull the end of the cable out of the bottom of the post, if necessary.
2. Insert the adjustment post (I) into the T-knob post (K).
3. Turn the T-knob (J) clockwise to tighten it and secure the console and adjustment post to the treadmill.
4. Pull the console cable through the bottom of the T-knob post.
5. Connect the console cable with the corresponding cable exiting the right side of the treadmill.

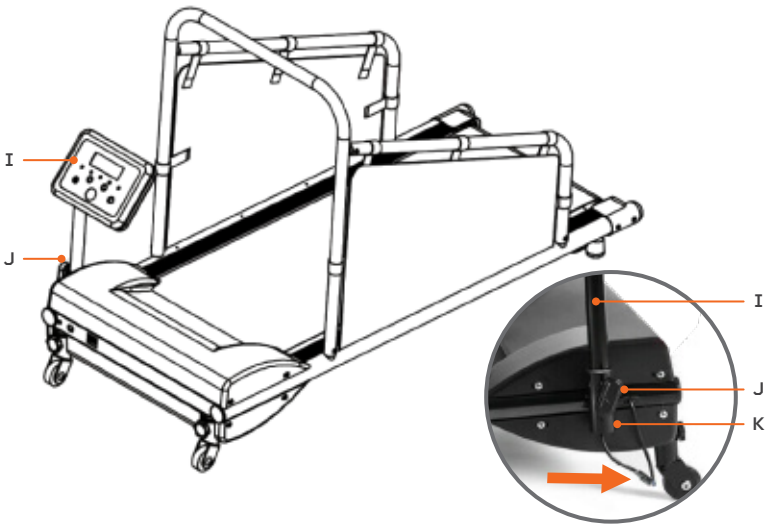

9 LUBRICATE THE RUNNING BELT

Before using your PawRunner treadmill for the first time, you must lubricate the running belt with the included bottle of maintenance oil (P). Follow the steps in **LUBRICATING THE RUNNING BELT** on page 38.

CUSTOMIZING THE TREADMILL

ADJUSTING THE CONSOLE HEIGHT AND VIEWING ANGLE

The console may be raised or lowered and rotated from side to side for easy viewing.

1. Loosen the T-knob by turning it counterclockwise.
2. Slide the console up or down to the desired height.
3. Rotate the adjustment post from side to side until the console is facing the desired direction.
4. Tighten the T-knob by turning it clockwise to secure the console in place.

The console may be tilted up and back via the tilt adjustment knob. There are two tilt options.

1. Loosen the tilt adjustment knob by turning it counterclockwise.
2. Tilt the console up or back to the desired angle.
3. Tighten the tilt adjustment knob by turning it clockwise.

ADJUSTING THE INCLINE OF THE TREADMILL

The treadmill deck can be tilted to three different incline levels: 4.5°, 5.1°, and 5.7°. The treadmill arrives at the lowest level. To adjust the tilt:

1. Twist the two incline adjustment knobs counterclockwise to loosen them.
2. Hold the base of the treadmill with one hand. With your other hand, pull the head of the knob out as you pull the incline adjustment post down. You will hear a click with the incline adjustment knob clicks into the next incline level. Repeat with the second knob.
3. Adjust until the incline is at your desired angle.

GETTING YOUR PET READY

BEFORE USING THE TREADMILL

1. Take your pet to the veterinarian for a checkup and to get exercise frequency, duration, and intensity guidelines for your pet's specific breed, age, size, and overall health. This is especially important for older pets, those that are overweight, have heart/circulatory problems, joint problems such as arthritis and hip dysplasia, or have not been regularly active for some time. Make sure to write down your questions and any concerns before your appointment so you don't forget to address anything important.
2. Have your pet's toenails clipped to avoid injury due to a snagged toenail and/or damage to the treadmill belt.
3. Help your pet get comfortable with the treadmill before using it. See **GETTING YOUR PET FAMILIAR WITH THE TREADMILL** below.
4. Purchase an appropriate-length leash and collar, if necessary. See **STEP 3: DETERMINING THE APPROPRIATE LEASH LENGTH** on the next page.

GETTING YOUR PET FAMILIAR WITH THE TREADMILL

It is important to get your pet comfortable with and excited about using the treadmill before using it. Be sure to use lots of treats, petting, and words of encouragement to help keep your pet at ease and build their confidence around the treadmill.

Observe your pet for signs of stress during each step and do not move on to the next step until they are completely comfortable. It could several days, or even a week, before your pet feels completely comfortable with a step and ready to move on to the next step. The goal is for your pet to love the treadmill and to look forward to using it as much as they look forward to treats, play time, or walks outside.

Don't rush your pet through the steps as this could cause them to build a negative association with the treadmill. Never force your pet to get on the treadmill. If your pet feels fear or hesitation around the treadmill, stop and try again after a few hours or days.

STEP 1: GETTING FAMILIAR WITH THE TREADMILL WHILE OFF

With the treadmill powered OFF:

1. Let your pet walk around the treadmill. Give them a few minutes to get familiar with it.
2. Practice getting on and off the treadmill with your pet. You may find treats helpful for enticing them to get on the treadmill.

STEP 2: GETTING FAMILIAR WITH THE TREADMILL WHILE ON

Once your pet has gotten comfortable getting on and off the treadmill, it's time to get them used to the sounds and movement of the working treadmill:

1. First, have your pet get on the treadmill and flip the power switch to turn the treadmill on. **Don't start the treadmill belt yet.** This is just to help your pet get used to the sounds the treadmill makes while turned on.
2. Now, have your pet get off the treadmill.
3. Stand near the front of the treadmill with your pet next to you on-leash.
4. Select an exercise program to begin the treadmill belt.
5. Walk around the treadmill with your pet. Be careful not to let them get too close to the treadmill.
6. Practice 1–5 above a few times so your pet can get used to the noises the treadmill makes, especially at higher speeds.

STEP 3: DETERMINING THE APPROPRIATE LEASH LENGTH

Leash Length Guidelines:

- **The leash should be a couple of inches longer than the safety key cord.** This is to ensure that, if your pet trips or stops suddenly, the safety key will be yanked from the console causing the treadmill to stop BEFORE your pet reaches the end of their leash. If the leash is too short, your pet could be injured when the treadmill stops in an emergency.
- **The leash should be no more than ½ the length of the treadmill belt.** This is to ensure your pet will not fall of the back end of the treadmill and get injured.

You will need to adjust the length of the leash according to the size/length of your pet.

1. With the treadmill OFF, stand at the front of the treadmill and have your pet stand on the running belt.

GETTING YOUR PET READY

2. Loop one end of your pet's leash around the treadmill crossbar.
3. Clip the other end of the leash to your pet's collar.
4. Place the magnetic safety key in place on its port on the treadmill console.
5. Clip the free end of the safety key cord to your pet's collar.
6. Verify that the leash is at least a few inches longer than the safety cord. If it's not, you'll need use a different leash.
7. Remove the safety key clip from your pet's collar.
8. Have your pet walk to the back of the treadmill belt as far as the leash will allow to ensure they will not go off the back edge. Shorten the length of the leash (or use a shorter leash), if necessary.

STEP 4: USING THE MOVING TREADMILL FOR THE FIRST TIME

⚠ The safety key MUST be in place before the treadmill can be used.

1. Ensure the treadmill is plugged in but powered off.
2. Stand at the front of the treadmill and have your pet stand on the running belt.
3. Loop one end of your pet's leash around the treadmill crossbar.
4. Clip the other end of the leash to your pet's collar.
5. Place the magnetic safety key in place on its port on the treadmill console.
6. Clip the free end of the safety key cord to your pet's collar. Give the cord a firm tug to ensure the clip won't come off accidentally.
7. Turn the treadmill on to the lowest speed.

⚠ CAUTION: Be ready to yank the safety key from the console to stop the treadmill in case your pet gets scared, falls, or tries to run off the treadmill.

8. As the treadmill belt begins to move, your pet may begin walking on their own. If they do not, try calling to your pet or coaxing them with treats to get them to walk forward on the treadmill.
9. Practice this process several times until your pet gets comfortable with and excited about walking on the treadmill **AND** your pet can walk by themselves on the treadmill without needing treats or coaxing.

PET EXERCISE SAFETY

SAFETY DURING EXERCISE

⚠ CAUTION: Never leave your pet unattended while using the treadmill.

- Do not exceed the maximum pet weight of 200 lbs. The recommended weight for this treadmill is 130 or less.
- Always secure your pet's leash to the crossbar. Always clip the safety key's cord securely to your pet's collar.
- Never allow your pet to get on or off the treadmill while it is already moving. Only begin a workout after your pet is standing in place on the treadmill and appropriately leashed. Completely stop the treadmill before allowing your pet to get down.
- Do not use the treadmill without the fabric side panels in place. The side panels help your pet use the treadmill without distractions which might cause them to leap off the side of the treadmill and get hurt.
- Stop the treadmill immediately if your pet displays any of the signs of overexertion. See **PREVENTING OVER-EXERCISE AND OVEREXERTION** on pages 24–25.
- Always exercise within the exercise frequency, duration, and intensity guidelines provided by your veterinarian.
- Carefully observe your pet for signs of discomfort or pain after each exercise session, especially after the first few sessions and after increasing the exercise frequency, duration, or speed. Often muscle soreness can appear several hours to days after exercise.
- If your pet shows any signs of discomfort or pain after a workout, make sure to give them plenty of time to rest and adjust their exercise routine as needed.
- Start with short, low speed exercises. Increase the duration, frequency, and intensity/speed of your pet's workouts slowly over time.
- Do not increase both the speed and length of a typical exercise session at the same time as this could cause overexertion. If you would like to see if your pet can handle a slightly more challenging workout, it's a good idea to increase **either** the speed or the duration. Then, wait a few days before exercising again to observe your pet for signs of discomfort or pain.
- Ensure your pet stays well hydrated before, during, and after exercise.

PET EXERCISE SAFETY

- Pets with arthritis or other joint or mobility issues may need a slow, short warm up before exercise. A warm up could be a few minutes walking around the yard, or a five-minute walk on the treadmill at the lowest speed.
- Pets with arthritis or other joint or mobility issues should avoid running on the treadmill as this could cause pain and further joint issues.
- Small pets, such as cats and smaller dog breeds, are not well-suited for jogging and running, and thus it is important to keep the speed low for them.
- Do not exercise puppies until they are cleared for exercise by your veterinarian.
- Never force your pet to get on the treadmill as this could create a negative association for them.
- Use the treadmill in a well-ventilated room and avoid using in rooms that are too warm to prevent heat exhaustion and heat stroke.
- Do not place the treadmill with the back of the running belt against a wall, door, stairs, or any other obstruction. Ensure there is at least 7 feet of clear space behind the treadmill.
- Never allow more than one pet to use the treadmill at a time.
- Take your pet out to so they can relieve themselves before exercise.
- Always wait at least 1 hour after meal to begin your pet's workout.

PREVENTING OVER-EXERCISE AND OVEREXERTION

It is very important to closely supervise your pet during exercise to prevent injury and overexertion. Some breeds have a tendency to overexert themselves; however, any pet could become overexerted if exercised incorrectly or if allowed to exercise too intensely or for too long.

⚠ **WARNING: Overexertion, excessive or incorrect exercise can cause sore paws or muscles, joint pain or injury, heat exhaustion or heat stroke, and even death.**

Signs* your pet needs to stop exercising and rest:

- Your pet is panting heavily (during or after exercise) and seems unable to catch its breath.
- Your pet slows down or stops exercising altogether.
- Your pet begins to limp.
- Your pet seems unusually tired, or sleeps or lays around more than normal after exercise.
- Your pet seems stiff or sore after exercise. This may not appear until hours or even days after exercise, so it's important to keep careful notes about how long each session lasts and how your pet seems in the days after exercise. See **EXERCISE DOCUMENTATION** on page 27.
- Your pet's gums are an unusual color, including purple/blue, gray, or bright red, which could indicate dehydration.
- Your pet seems extremely thirsty.
- Your pet seems confused or can't focus.
- Your pet shows signs of heat exhaustion or heat stroke, symptoms of which include:
  - Dehydration: a dry nose, sunken eyes, excessive tiredness or panting, and unusual coloring of the gums can indicate dehydration.
  - Fever: a hot, dry nose (rather than wet and cool) can indicate fever.
  - Excessive drooling: lots of drool, or drool that is thicker or sticker than normal.
  - Rapid pulse.
  - Shivering or muscle tremors.
  - Lethargy or weakness.
  - Lack of urine.
  - Dizziness.
  - Vomiting or diarrhea.

⚠ **WARNING: If you think your pet may be experiencing heat exhaustion or heat stroke, get them to a cool location and contact your veterinarian or an emergency veterinary clinic right away.**

NOTE: The above signs and symptoms of overexertion, heat exhaustion, and heat stroke are primarily seen in dogs. Consult your veterinarian for specific signs and symptoms of overexertion and heat exhaustion in cats, ferrets, and other pets.

EXERCISE RECOMMENDATIONS

HYDRATION

Adequate hydration is essential. Ensure your pet gets enough water before, during, and after exercise. Dehydration can lead to heat exhaustion or heat stroke.

EXERCISE FREQUENCY, DURATION, AND INTENSITY

Regular exercise is important for your pet's health. The optimal exercise frequency (how many exercise sessions per week) and duration (the length of each exercise session), and intensity (the speed) for your pet will depend on their specific breed, size, age, weight, and overall health. Consult with your veterinarian for guidance on how often, how long, and how intensely your pet should exercise.

Always make sure to give your pet enough time to recover between workout sessions. Some pets are young and healthy enough to handle daily exercise, some are not. Always check with your veterinarian to avoid over-exercising your pet.

DURATION OF INDIVIDUAL EXERCISE SESSIONS

If your pet is older, overweight, has heart/circulatory or joint problems, or has not exercised for some time, start with short exercise sessions of 10 minutes or less in the first few weeks and slowly increase exercise duration week to week. Pets who are younger and/or used to regular exercise can exercise for longer periods of time, but exercise duration should still be increased slowly over time.

⚠ **CAUTION:** Always make sure to exercise your pet within the frequency, duration, and intensity guidelines provided by your veterinarian.

Carefully observe your pet for signs of discomfort or pain after the first few exercise sessions. Often muscle soreness can appear several hours to days after exercise (called delayed onset muscle soreness or DOMS). If your pet experiences discomfort after an exercise session, this can tell you that the exercise session was too long or that your pet did not have enough time to rest between exercise sessions.

EXERCISE DOCUMENTATION

To evaluate your pet's fitness and/or weight-loss progress, and to help prevent over-exercising your pet, we highly recommend creating a plan before beginning a new exercise routine. In your plan, document data from each exercise session, such as distance, exercise duration, and calories burned. You will also want to include information such as your pet's current weight, notes about how each exercise session went, and notes about any discomfort you observe in the days after each exercise. See the **SAMPLE WEEKLY EXERCISE PLAN** below.

SAMPLE WEEKLY EXERCISE PLAN

Week: _____ **Month:** _____ **Year:** _____

Day	Date	Exercise Duration	Exercise Distance	Calories Burned	Notes
Mon.					
Tues.					
Wed.					
Thur.					
Fri.					
Sat.					
Sun.					
Weekly Totals:					

OPERATING INSTRUCTIONS

USING THE CONTROL PANEL TO OPERATE THE PAWRUNNER

1. **Window:** Shows the value of the selected display mode: scan, speed, time, distance, or calories burned. Scan mode shows the value of each mode in turn.
2. **Display Mode LEDs:** The LEDs indicate which display mode is currently selected: scan, speed, time, distance, or calories burned.
3. **Speed + / - Buttons:** During exercise, use the buttons to increase/decrease the speed from 0.5–7.5 mph, in 0.1 mph increments. In standby mode, use the buttons to adjust the time before starting a preset program or to adjust the settings when selecting a countdown mode: increase/decrease the time goal from 5–99 minutes, in 1-minute increments, the distance goal from 0.4–99 miles, or the calorie goal from 10–990 kilocalories.
4. **Start/Stop Button:** Press once to start the selected preset program or countdown mode workout. Press again to pause the workout. While paused, press a third time to restart the workout.
5. **Magnetic Safety Key Port:** The magnetic safety key must be in place on the magnetic port in order to begin using the treadmill.
6. **Mode Button:** In standby mode, press to toggle through the three countdown modes: time, distance, calories, then the 12 preset programs (the window shows: 30:00, 1.00, 50.0, P01–P12). During a workout, press the button to toggle through the display modes in order: scan, speed, time, distance, and calories burned. The Display Mode LEDs indicate which display mode is currently selected.

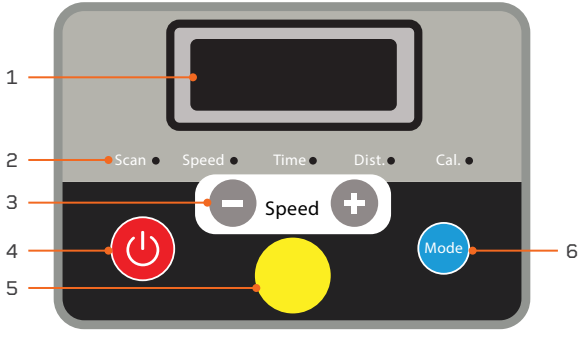

*Speed cannot be adjusted for preset programs.

USING THE REMOTE CONTROL TO OPERATE THE PAWRUNNER

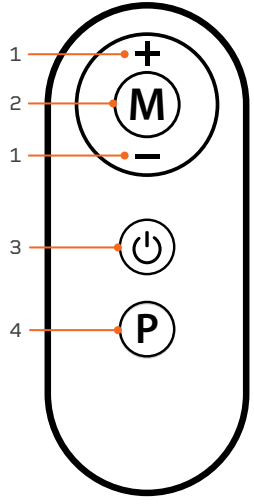

1. **+/- Buttons*:** During exercise, use the buttons to increase/decrease the speed from 0.5–7.5 mph, in 0.1 mph increments. In standby mode, use the buttons to adjust the time before starting a preset program or to adjust the settings when selecting a countdown mode: increase/decrease the time goal from 5–99 minutes, in 1-minute increments, the distance goal from 0.4–99 miles, or the calorie goal from 10–990 kilocalories.
2. **Mode Button:** In standby mode, press to toggle through the three countdown modes: time, distance, calories (the window shows: 30:00, 1.00, 50.0). During a workout, press the button to toggle through the display modes in order: scan, speed, time, distance, and calories. The Display Mode LEDs on the control panel indicate which display mode is currently selected.
3. **Start/Stop Button:** Press once to start the selected preset program or countdown mode workout. Press again to pause the workout. While paused, press a third time to restart the workout.
4. **Program Button:** Press to toggle through the twelve preset programs, P01–P12.

*Speed cannot be adjusted for preset programs.

MODES

Standby Mode: The PawRunner is powered on, but no workout is in progress.
Program Mode: Choose from twelve preset programs: P1–P12.
Countdown Mode: Choose between time, distance, and calorie countdown modes.

QUICK START GUIDE

STARTING THE TREADMILL

1

POWER ON THE TREADMILL

1. Plug the power cord into a grounded wall outlet.
2. Flip the power switch at the front of the motor housing to the ON position. The console will light up and all values will be set to zero.

2

PLACE THE MAGNETIC SAFETY KEY

⚠ The safety key MUST be in place before the treadmill can be operated.

The safety key cuts power to the treadmill in case your pet falls or an emergency occurs. See **USING THE MAGNETIC SAFETY KEY** on page 9.

1. Place the safety key on the round magnetic port on the console.
2. Clip the other end of the safety key securely to your pet's collar.
3. Give the clip a tug to make sure it won't release from the collar.

3

STARTING THE TREADMILL

1. Ensure your pet is in place on the treadmill, on leash, and ready to go.
2. Secure your pet's leash to the treadmill crossbar. See **DETERMINING APPROPRIATE LEASH LENGTH** on page 21.
3. Power on the treadmill and begin a workout. See **CREATING A WORKOUT** on pages 31–33 for instructions.

STOPPING THE TREADMILL

1

STOP THE TREADMILL AND UNHOOK YOUR PET

1. Press the red **Stop button** to stop the running belt.
2. Wait until the treadmill has come to a **complete stop** before unhooking your pet from the crossbar.

2

POWER OFF AND UNPLUG THE PAWRUNNER

1. Remove the safety key and store it in a separate location.
2. Flip the power switch to the OFF position.
3. Unplug the power cord from the wall outlet.

CREATING A WORKOUT

CREATING A COUNTDOWN-MODE WORKOUT

Three countdown modes allow you to set a specific exercise goal, time, distance, or a certain number of calories to be burned, for your pet's workout. During the workout, the specific exercise goal will count down and the treadmill will automatically stop when the goal is reached.

TIME COUNTDOWN MODE

1. Press the **Mode button** once to choose time countdown mode. The red LED next to "Time" will be lit.
2. The default time "30:00" will flash on the screen. Enter the desired exercise time, from 5:00–99:00 minutes, in one-minute increments, by pressing the **+/- buttons**.
3. Press the **Start/Stop button** to begin the workout.
4. Use the **+/- buttons** to adjust the speed at any time during your workout.

DISTANCE COUNTDOWN MODE

1. Press the **Mode button** twice to choose distance countdown mode. The red LED next to "Dist." will be lit.
2. The default distance "1.00" will flash on the screen. Enter the desired distance, from 0.4–99 miles, by pressing the **+/- buttons**.
3. Press the **Start/Stop button** to begin the workout.
4. Use the **+/- buttons** to adjust the speed at any time during your workout.

CREATING A WORKOUT

CALORIE COUNTDOWN MODE

1. Press the **Mode button** three times to choose calorie countdown mode. The red LED next to "Cal." will be lit.
2. The default calorie goal "50.0" will flash on the screen. Enter the desired calorie goal, from 00.0–990.0 calories, by pressing the **+/- buttons**.
3. Press the **Start/Stop button** to begin the workout.
4. Use the **+/- buttons** to adjust the speed at any time during your workout.

NOTE: The three countdown modes are not available for preset programs.

NOTE: When the Start/Stop button is pressed, the console will show a 3-second countdown (you will hear accompanying tones). The workout will begin after the countdown completes and the treadmill will begin automatically. The treadmill will stop automatically when the countdown mode goal has completed.

CREATING A PRESET-PROGRAM WORKOUT

The PawRunner has twelve preset exercise programs, P1–P12, to help keep your pet interested in and excited about using the treadmill. Each preset exercise program is divided into 20 segments, each with a preset speed. See the **PRESET PROGRAM SPEED CHART** on page 34. To begin a preset program:

1. Press the **Mode button**, to toggle through the programs (the countdown modes will appear first, then the preset programs will appear). Choose one of the preset programs: P1–P12.
2. The default time of "30:00" will flash on the screen. Use the **+/- buttons** to adjust the workout time from 5:00–99:00 minute, in one-minute increments.
3. Press the **Start/Stop button** to begin the preset program.
4. Press the **Start/Stop button** again to pause the workout at any time.

NOTE: When the Start/Stop button is pressed, the console will show a 3-second countdown (you will hear accompanying tones). The exercise timer will begin after the countdown completes and the treadmill will begin automatically. The treadmill will stop automatically when the preset program finishes.

NOTE: Speed is automatically set for preset programs and cannot be adjusted.

CHANGING THE DISPLAY MODE SHOWN ON THE CONSOLE

While working out, you can change the display mode which is the workout value displayed on the console.

1. During the workout, press the **Mode button** to toggle, in order, through the display modes choices: scan, speed, time, distance, and calories.

NOTE: A lit red LED to the right of the display mode name indicates the current selected display mode.

NOTE: Scan mode shows each value, in turn, for five seconds.

NOTE: The display mode cannot be changed while in standby mode (before a workout has begun).

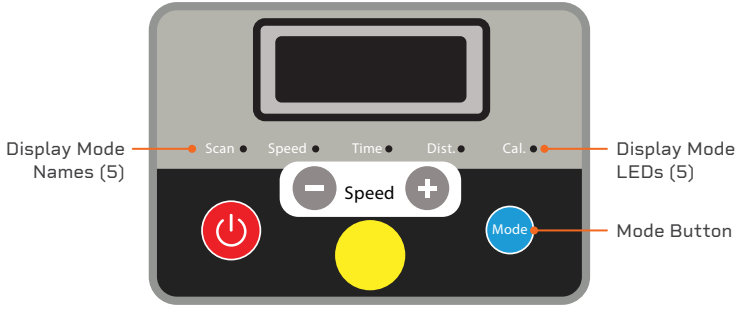

PRESET PROGRAM SPEED CHART

PRGM	1	2	3	4	5	6	7	8	9	10	11	12	13	14	15	16	17	18	19	20
P1	1.1	1.1	2.1	2.1	3.2	3.2	3.2	3.2	3.2	3.2	3.2	3.2	3.2	3.2	3.2	3.2	2.1	2.1	1.1	1.1
P2	1.1	2.1	3.2	4.3	4.3	4.3	4.3	3.2	2.1	1.1	1.1	2.1	3.2	4.3	4.3	4.3	4.3	3.2	2.1	1.1
P3	1.1	1.1	1.1	2.1	2.1	2.1	3.2	3.2	3.2	4.3	4.3	4.3	5.3	5.3	5.3	5.3	4.3	3.2	2.1	1.1
P4	1.1	3.1	5.3	6.4	5.3	3.2	1.1	1.1	3.2	5.3	6.4	5.3	3.2	1.1	1.1	3.2	5.3	6.4	5.3	3.2
P5	1.1	2.1	3.2	5.3	6.4	3.2	3.2	5.3	6.4	3.2	3.2	5.3	6.4	3.2	3.2	5.3	6.4	3.7	2.1	1.1
P6	1.1	2.1	3.2	4.3	5.3	6.4	6.4	6.4	6.4	6.4	6.4	5.3	5.3	4.3	4.3	3.2	3.2	2.1	2.1	1.1
P7	1.1	3.2	5.3	4.3	6.4	5.3	6.4	6.4	4.3	6.4	6.4	6.4	6.4	4.3	6.4	5.3	6.4	6.4	4.3	1.1
P8	1.1	2.1	4.3	5.3	4.3	6.4	4.3	6.4	4.3	6.4	6.4	4.3	6.4	4.3	6.4	4.3	5.3	4.3	2.1	1.1
P9	1.1	4.3	2.1	6.4	3.2	6.4	4.3	6.4	5.3	6.4	6.4	5.3	6.4	4.3	6.4	3.2	6.4	2.1	4.3	1.1
P10	1.1	3.2	2.1	6.4	6.4	4.3	6.4	6.4	6.4	4.3	6.4	6.4	6.4	6.4	5.3	3.2	5.3	2.1	4.3	1.1
P11	1.1	3.2	6.4	6.4	6.4	6.4	4.3	6.4	6.4	6.4	6.4	6.4	6.4	4.3	6.4	6.4	6.4	6.4	3.2	1.1
P12	2.1	2.1	4.3	6.4	2.1	4.3	6.4	3.2	7.5	4.3	6.4	5.3	6.4	6.4	7.5	4.3	5.3	3.2	4.3	1.1

SPEED BY SEGMENT

MOVING AND STORING THE PAWRUNNER

⚠ CAUTION:

- Always power OFF the treadmill at the power switch and unplug the treadmill before moving or storing.
- Never allow children to move the treadmill.
- Always ensure there are no children, pets, or objects under or in front of the treadmill when it is being moved.

MOVING THE TREADMILL

The PawRunner has two front wheels for easy transportation. To move

1. Power off the treadmill and unplug it from the electrical outlet.
2. Wrap the power cord up and out of the way.
3. Grasp the back of the treadmill deck with both hands and lift the back half of the treadmill so that the weight is on the two front wheels.
4. Roll the treadmill to its new location.

NOTE: Make sure there are no children, pets, or objects in the way when you are moving the treadmill.

STORING THE TREADMILL

- Make sure to store the treadmill in a cool, dry location.
- Don't store the treadmill in direct sunlight, in high-humidity, high-temperature, or high-dust environments.

MAINTENANCE AND CARE

⚠ **CAUTION:** Before you perform any care, cleaning, maintenance, repair, or similar work on your treadmill, switch off the power and remove the power cable from the electrical outlet. Check before starting the planned work that your treadmill is completely disconnected and switched off. Only when all work is fully completed, and the device is completely re-assembled, may the treadmill be reconnected to a wall outlet and switched on.

BEFORE FIRST USE OR AFTER A LONG BREAK FROM USE

Check that the treadmill is safe. There must be no objects on or under the device. Make sure that there is a continuous film of lubricant (silicone) on the running deck. If this is not the case, then use the supplied silicone to apply a lubricant film. See **LUBRICATING THE RUNNING BELT** on page 38.

MAINTENANCE & CLEANING INTERVALS

CHECK ON AND AROUND THE TREADMILL: BEFORE EACH USE

Check that there are no objects on or under the treadmill that could interfere with safe usage.

CHECK TIGHTNESS OF ALL BOLTS/NUTS/KNOBS: BEFORE EACH USE

Check all bolts, nuts, and knobs before each use. Fully tighten, if necessary.

CLEAN THE TREADMILL: AFTER EACH USE

- After each workout, clean the treadmill with a damp cloth and mild, non-abrasive detergent to remove any dirt, saliva, or other residues.
- Never use solvents or chemical, corrosive, abrasive, or solvent cleaners.
- Dry the cleaned areas thoroughly.

CHECK THE LUBRICATION OF THE RUNNING BELT: ONCE A WEEK

If your regular checks show that there is no longer enough lubrication, lubricate the belt immediately and shorten the inspection interval accordingly. Please see **LUBRICATING THE RUNNING BELT** on page 38 for instructions.

CHECK THE ALIGNMENT OF THE RUNNING BELT: ONCE A WEEK

The alignment of the running belt must be checked regularly. If you notice that the belt is running to one side, this must be corrected immediately. Please see **ADJUSTING THE RUNNING BELT** on page 40.

CLEAN THE MOTOR COMPARTMENT: ONCE A MONTH

To clean the motor compartment, remove the motor cover bolts and cover. Vacuum the visible dust with the small nozzle of a vacuum cleaner. Never use detergent or compressed air under any circumstances.

⚠ **CAUTION:** This work may only be performed when the treadmill is switched off and the power plug is removed.

WHY IS MAINTENANCE OF MY TREADMILL SO IMPORTANT?

In order to enjoy using your treadmill for many years, it is important to regularly and consistently do basic maintenance. The maintenance interval will depend very much on how often you use your treadmill, and therefore the intervals may need to be shorter than specified.

WHAT CAN HAPPEN IF THERE IS A LACK OF MAINTENANCE?

There is friction between the running belt and the running deck when in use. Any kind of friction creates wear which reduces the life of your treadmill. By lubricating between the running belt and the running deck with silicone oil, this friction is reduced, thus increasing the life of both parts. If the treadmill runs dry, the running deck will get hot, and the surface of the running deck and the running belt may be damaged or destroyed. Friction can also lead to a static charge which can discharge on contact with the frame. This is not only unpleasant but can also destroy the treadmill's electronics.

WHY DO I HAVE TO CLEAN THE MOTOR COMPARTMENT?

Due to movement of the running belt and ventilation of the motor, the treadmill attracts dust from the environment. This dust will be deposited both under and in the machine. Without cleaning, the interior of the treadmill would at some point get so dusty that a short would be caused in the electronic components. To avoid this, regular cleaning is necessary.

DAMAGE CAUSED BY NEGLECT OR LACK OF MAINTENANCE AND CARE ARE EXCLUDED FROM THE WARRANTY.

MAINTENANCE AND CARE

⚠ **WARNING:** Always flip the power switch to the OFF position **and** unplug the power cord before starting any maintenance, cleaning, or repairs.

CLEANING & GENERAL MAINTENANCE

- Wipe down the PawRunner after use. Clean only with a slightly damp cloth. Do not use chemical or solvent cleaners.
- Inspect for visible damage before use. Do not use if damaged or malfunctioning.
- Inspect and tighten all external bolts periodically.
- Only use with the original parts and accessories provided by the manufacturer.
- Never open the motor housing, other than to perform cleaning and maintenance procedures described in this manual, or unless instructed to do so by an authorized service representative. Servicing other than the procedures in this manual should be performed by an authorized service representative only.
- Never insert or drop any object into any opening.

LUBRICATING THE RUNNING BELT

The most important maintenance for a treadmill is regular, timely lubrication and care and maintenance of the running belt.

- The running belt must be lubricated if a significant increase in friction is noted. This will be apparent if the belt makes jerking movements during use.
- Insufficient lubrication and the resulting increase in friction will inevitably lead to an increase in wear and cause damage to the treadmill's running belt, deck, motor, and circuit board.
- How often the treadmill is used will generally determine how often you must perform maintenance. Typically, treadmills will only need to be lubricated every few months. However, as use-time will vary greatly from pet to pet, we recommend you keep a maintenance log and set a specific day each week in the first 6 months of use to check the lubrication of the running belt.
- To check the belt lubrication, lift up the front third of the belt and feel with your hand for lubrication under the center of the belt. If lubrication is present, then write "OK" next to the date in your maintenance log. If there is little or no lubrication present, then lubricate the belt and record in your maintenance book accordingly. Over time, you will be able to see how often lubrication is needed.

⚠ **Even if you choose not to keep a maintenance log, you MUST check the lubrication of the running belt at least once a week.**

- If the treadmill is not used for a long period, you must check the lubrication of the belt before use and lubricate it if necessary.

⚠ **CAUTION:** Only use the included bottle of silicone maintenance oil to lubricate the running belt. Do NOT use any other kinds of silicone, lubricants, or silicone sprays.

HOW TO LUBRICATE THE RUNNING BELT

1. Make sure that the treadmill is switched off, unplugged, and that the belt is not moving.
2. Open the bottle of silicone maintenance oil. See *Fig. 1*.
3. Lubrication must be applied under the center of the belt. Lift one side of the belt high enough that you can reach the center with the end of bottle's applicator tip. See *Fig. 2*.
4. Apply one line of silicone oil, about 15ml or 3 teaspoons, under the center of the belt, from the front to the back of the treadmill. See *Fig. 3*.
5. If too much oil is applied it can lead to the running belt slipping. If this occurs, use a dry cloth to remove the excess oil from the running deck and drive rollers with a dry cloth.
6. After applying the lubrication, let the running belt run without any load (no pet on the treadmill) at a speed of 2.5 mph for 3 minutes to evenly distribute the silicone oil.

Figure 1

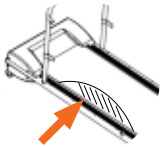

Figure 2

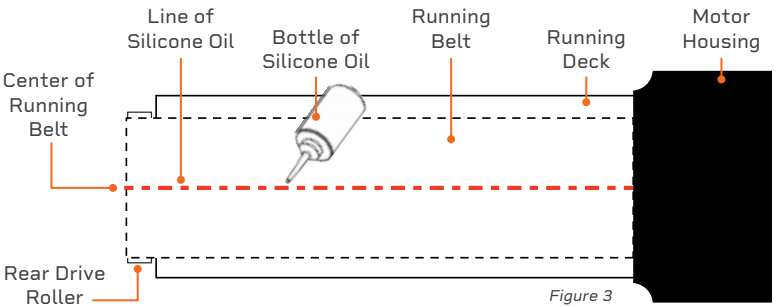

Figure 3

MAINTENANCE AND CARE

⚠ **WARNING:** Always power off the treadmill, by flipping the power switch to the OFF position, and unplug the power cord before starting any maintenance, cleaning, or repairs.

ADJUSTING THE RUNNING BELT

⚠ **WARNING:** If the running belt has become so displaced that it is rubbing along one of the side rails, this will cause friction and defects to the running belt. Damage caused by failure to adjust the belt or insufficient adjustments will not be covered by the warranty under any circumstances.

To achieve as long a service life as possible, the running belt should always be kept running straight along the center of the running deck. Therefore, it is important to examine the belt before each exercise session to see if it is straight and running in the center of the deck or if it has changed position.

Possible reasons for the running belt changing position are:

- The ground on which the treadmill is standing is either uneven or at an incline.
- Your pet's walking or running style (for example, distribution of weight to one side).

HOW TO ADJUST THE RUNNING BELT

If the Belt Is Running to the Left of Center:

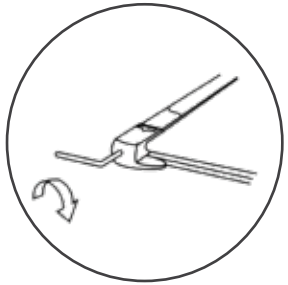

1. Start the treadmill and set the speed to 1.5–2 mph with no load (no pet on the treadmill).
2. Use the provided hex key to turn the left adjustment screw, located at the back end of the belt, ¼ turn clockwise.
3. Allow the treadmill to run with no load for 1–2 minutes to see if the belt is now running along the center.
4. If the running belt is now running in the center of the running deck, the adjustment was successful. If the belt is still off-center, repeat steps 1–3 until the belt is running in the center.

If the Belt Is Running to the Right of Center:

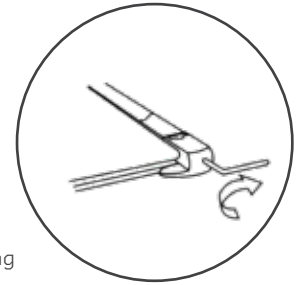

1. Start the treadmill and set the speed to 1.5–2 mph with no load (no pet on the treadmill).
2. Use the provided hex key to turn the right adjustment screw, located at the back end of the belt, ¼ turn clockwise.
3. Allow the treadmill to run with no load for 1–2 minutes to see if the belt is now running along the center.
4. If the running belt is now running in the center of the running deck, the adjustment was successful. If still off-center, repeat steps 1–3 until the belt is running in the center.

NOTE: If the belt cannot be adjusted, please contact a support representative immediately.

HOW TO FIX A JAMMED RUNNING BELT

If the Belt Is Jammed and Cannot Move:

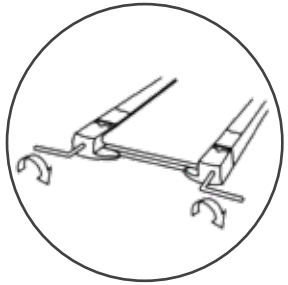

1. Start the treadmill and set the speed to 1.5–2 mph with no load (no pet on the treadmill).
2. Use the provided hex key to turn the left and right adjustment screws ½ turn clockwise.
3. Allow the treadmill to run with no load for 1–2 minutes to see if the belt is now running along the center.
4. If the running belt is now unjammed, the adjustment was successful. If the belt is still off-center, repeat steps 1–3 until the belt is running in the center.

TROUBLESHOOTING & ERROR CODES

Quickly troubleshoot simple issues you might experience with your PawRunner Treadmill using the table below.

Please contact a customer support representative for additional assistance at: (732) 456-6063 or support@lifeprofitness.com. Please do not attempt to repair the treadmill on your own.

PROBLEM	POSSIBLE REASON	HOW TO RESOLVE
Treadmill is not working.	No power.	Plug the power cord into a wall outlet.
	Power switched off.	Flip the power switch to the ON position.
	Magnetic safety key is not in position.	Place the magnetic safety key in position on the magnetic port on the front of the treadmill.
	Treadmill has entered sleep mode.	Press any button on the control panel to exit sleep mode.
	Short circuit.	Contact customer support.
	Fuse burned out.	Contact customer support.
Console does not show all data.	PCB screws are loose.	Contact customer support.
	Console is defective.	Contact customer support.
Keypad not functioning.	Broken or disconnected buttons.	Contact customer support.
Running belt is not smooth.	Not enough lubrication.	Lubricate with the belt with silicone oil. See **LUBRICATING THE RUNNING BELT** on page 38.
	Running belt too tight or off center.	Adjust the belt. See **ADJUSTING THE RUNNING BELT** on page 40.

ERROR CODE	POSSIBLE REASON	HOW TO RESOLVE
Err (or E00)	Magnetic safety key is missing or improperly positioned.	Place the safety key in its place on the treadmill console.
	Console is defective.	Contact customer support.
E2	Console is broken.	Contact customer support.
E4	Console is broken.	Contact customer support.
E5	Over-current protection: control board has short-circuited or the motor is blocked.	Contact customer support.
E6	Motor is broken or motor cable failure.	Contact customer support.
E7	The console cables have been disconnected.	Check to see if the console cables are correctly connected.
E8	Overload protection: excess of electricity or the maximum weight capacity has been exceeded.	Maximum weight capacity is 200 lbs. If maximum weight has not been exceeded, contact customer support.
E9	The machine has worked too long or the motor temperature is too high.	Stop the machine and allow it to cool down for at least 1 hour.

SAFETY INSTRUCTIONS

PLEASE KEEP THIS MANUAL IN A SAFE PLACE FOR REFERENCE.

⚠ **WARNING:** To reduce the risk of burns, fire, electric shock, injury to persons, or damage to equipment, read the following important precautions and information before operating the PawRunner Pet Treadmill.

RESPONSIBILITIES

1. It is the responsibility of the owner to ensure that all users of the PawRunner are adequately informed of all warnings and precautions.
2. Use the PawRunner only as instructed in this manual.
3. Check treadmill and power cord for damage prior to every use. Check for loose screws and knobs before use. Tighten any loose screws/knobs before use. Do not use if damaged, faulty, or defective. Do not use if the device emits unusual sounds or odors.
4. Never leave your pet unattended while using the treadmill.
5. Never allow children to use the PawRunner. Always remove the magnetic safety key and unplug the power cable when not in use to prevent inappropriate and uncontrolled use by others, especially children.
6. Keep children away from the PawRunner at all times. Do not allow children to play on or around the treadmill.
7. Keep the bottle of maintenance oil out of reach of children and pets to prevent accidental ingestion.
8. Do not allow more than one pet to use the treadmill at a time.
9. Do not exceed the maximum weight capacity of 200 lbs.
10. The treadmill will automatically stop working after the set working time. Do not allow it to run continuously for more than two hours at a time.
11. The PawRunner is intended for in-home use only. Do not use the PawRunner in any commercial, rental, institutional, therapeutic, or school setting.

ELECTRICAL SAFETY

12. Only power the treadmill using the integrated power cord.
13. Do not plug into a power strip. It is not recommended to use an extension cable.
14. Plug the PawRunner into an appropriately grounded outlet, installed by a professional electrician and on a dedicated circuit. It is important that no sensitive electronic equipment, such as computers or TVs, share the same electrical circuit as the PawRunner.
15. Do not connect other appliances to the same outlet as the PawRunner.
16. Do not use outdoors. Do not use the treadmill in high-temperature, high-moisture, or high-dust environments. Do not use or store in direct sunlight. Do not use during severe storms. Unplug the device immediately in the event of a power failure.
17. The treadmill is not waterproof. Never spill water or beverages onto or into the treadmill body or operating components as this may cause electric shock or fire. Do not use in a place where the treadmill may become wet or damp. Do not immerse in water. If the treadmill becomes wet, unplug it, and do not use.
18. Keep the PawRunner and power cord away from flammable or explosive items, chemicals, direct sunlight, open flames, and heat sources such as central heating, portable heaters, stoves, fireplaces, and ovens. Excessive heat can potentially cause fire, electrocution, or injury to people, pets, or property.
19. Do not operate in the presence of aerosol (spray) products or corrosive gases, or where concentrated oxygen is being administered.
20. Always unplug the PawRunner when it is not in use. Always unplug the treadmill before cleaning, doing maintenance, moving, or storing.
21. Always unplug the power cord by pulling gently from the plug. Never unplug by pulling on the cord itself.
22. Never operate the treadmill or unplug the power cord with wet hands.
23. The treadmill should only be powered on and off using the power switch on the front of the motor housing.
24. Always place the power cable where it won't be damaged, stepped on, or create a tripping hazard. Never leave the power cord where your pet could chew on it.
25. Never place heavy objects on the power cord. Never cut, bend, tie, or destroy the power cord.

PET EXERCISE SAFETY

26. The magnetic safety key must be in place before the treadmill can be used.
27. Take your pet to the veterinarian for a checkup and to get exercise frequency and duration recommendations for your pet's specific breed, age, size, and overall health. This is especially important for older pets, those that are overweight, have heart/circulatory problems, joint problems such as arthritis and hip dysplasia, or have not been active for some time.
28. See full list of pet exercise safety instructions on pages 23–25.

EXERCISE ENVIRONMENT

29. Use and store the treadmill only on a sturdy, flat, clean floor and in a dry environment between 50–86°F.
30. Ensure there is at least seven feet of clearance behind the treadmill, and at least four feet of clearance to the front and sides.
31. It is recommended to place a floor covering (rug, carpet, mat) beneath the PawRunner to protect floors that could be damaged, such as carpet, wood, laminates, and floor tiles. Ensure that the floor covering does not slide around before beginning exercise.
32. Do not place the PawRunner on white or light-colored carpets or rugs as the feet could leave marks or discoloring.
33. Use the PawRunner in a well-ventilated room, so that an optimal amount of oxygen is available during exercise. Avoid drafty areas.

CLEANING, STORAGE & MAINTENANCE

34. Flip the power switch to the OFF position, unplug the power cable, and let the treadmill completely cool down before cleaning, storing, or transporting.
35. Wipe down the treadmill with a soft, slightly damp cloth after each use. Ensure the treadmill is completely dry before using again. Do not use abrasive, corrosive, solvent, or chemical cleaners or harsh detergents.
36. Store the treadmill in a cool, dry location. Do not store in a garage or covered patio, or near water.
37. Store the magnetic safety key separately to prevent unauthorized use of the treadmill, especially by children.
38. Never open the motor housing unless instructed to do so by an authorized service representative. Servicing other than the procedures in this manual should be performed by an authorized service representative only.
39. Never insert or drop any object into any opening.

LIFETIME WARRANTY

Lifepro Fitness creates quality, durable exercise products and we stand by that quality with a lifetime warranty on all of our products. If your PawRunner ever breaks (and we doubt it will), we'll send you replacement parts and show you how to repair it. If your PawRunner cannot be repaired, we'll replace it—free of charge. Register your PawRunner at **pawrunner.lifeprofitness.com** to activate your warranty within 14 days of purchase.

PRODUCT SPECIFICATIONS

UNIT SPECS

Dimensions: 48” L × 22.8” W × 42” H
Running Surface: 38.2” L × 14.2” W
Side Panels: 18.6” L × 27.0” W
Net Weight: 47.5 lbs.
Maximum User Weight: 200 lbs.
Max Consumption: 800 W
Motor Power: 0.5 HP
Voltage: 110 V
Amplitude: 50–60 Hz

Maximum Pet Weight: 200 lbs.
Recomm. Max Weight: 130 lbs.
Maximum Pet Height: .35.4”
Maximum Pet Length: 29.5”
Decibel Rating: 65–70 dB
Speed Range: 0.5–7.5 mph
Preset Programs: 12
Countdown Modes: 3

MADE IN CHINA

ENDURANCE TRAINING

PAWRUNNER

PET TREADMILL

FROM OUR **SPORTS RECOVERY** COLLECTION

SURGER

VIBRATING FOAM ROLLER

Enjoy all of the benefits of foam rolling and vibration technology together with the Surger Vibrating Foam Roller. Use the Surger before or after your workout as part of your warm-up or recovery routine to gain more flexibility and to help prevent soreness and injuries.

Deep compression of muscle fibers and tissues (self-myofascial release) combined with the Surger’s vibration technology breaks up muscle knots and relaxes tight muscles and fascia. Choose from four vibration speed levels to apply the perfect amount of intensity every time.

SURGER BENEFITS

- Increase workout effectiveness
- Reduce soreness
- Speed up recovery
- Prevent injury
- Boost circulation
- Improve muscle flexibility and performance
- Decrease pain and inflammation
- Loosen knots, trigger points, and tightness in your muscles and fascia.

SONIC

VIBRATING MASSAGE GUN

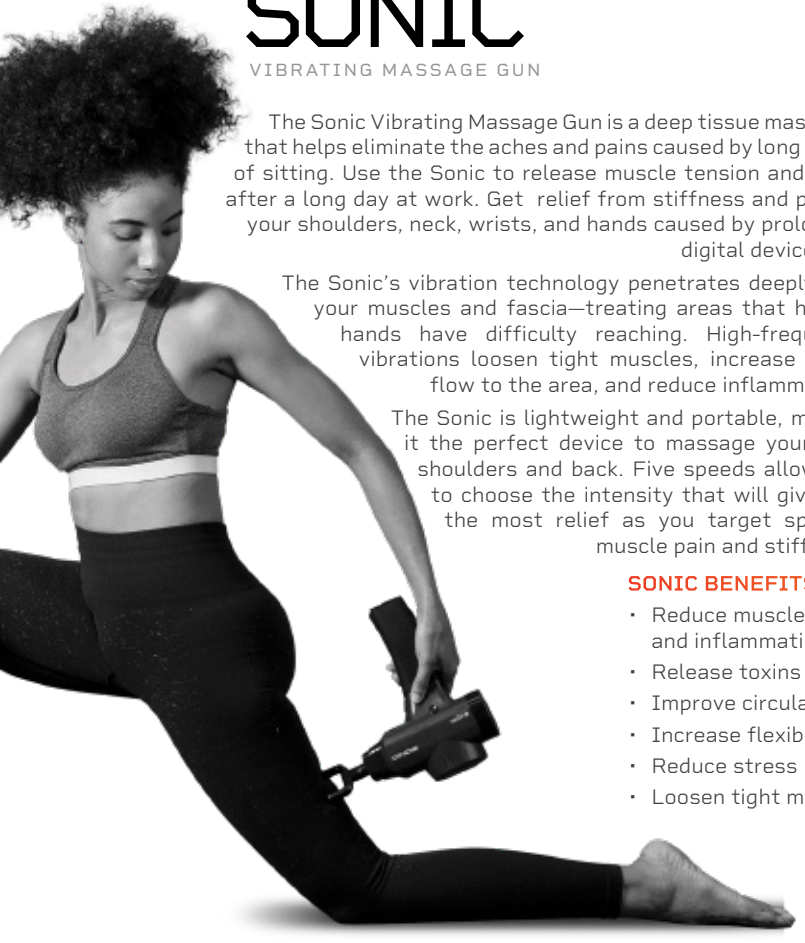

The Sonic Vibrating Massage Gun is a deep tissue massager that helps eliminate the aches and pains caused by long hours of sitting. Use the Sonic to release muscle tension and relax after a long day at work. Get relief from stiffness and pain in your shoulders, neck, wrists, and hands caused by prolonged digital device use.

The Sonic's vibration technology penetrates deeply into your muscles and fascia—treating areas that human hands have difficulty reaching. High-frequency vibrations loosen tight muscles, increase blood flow to the area, and reduce inflammation.

The Sonic is lightweight and portable, making it the perfect device to massage your own shoulders and back. Five speeds allow you to choose the intensity that will give you the most relief as you target specific muscle pain and stiffness.

SONIC BENEFITS

- Reduce muscle pain and inflammation
- Release toxins
- Improve circulation
- Increase flexibility
- Reduce stress
- Loosen tight muscles

RHYTHM

VIBRATION PLATFORM

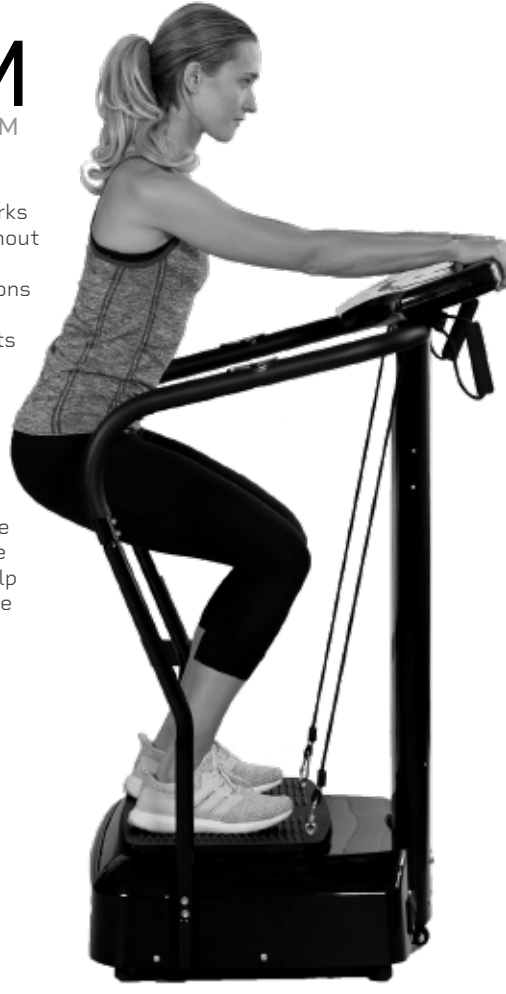

The Rhythm Vibration Platform works by creating rapid vibrations throughout the body, especially on the muscles specifically targeted. These vibrations cause the muscles to stretch, flex, and relax at a rapid rate. This results in increased muscle and bone growth, improved flexibility, and boosted metabolism—all of which increase the number of calories you burn.

The Rhythm can be used by people from every fitness level. If you have suffered an injury or you experience joint or back pain, find relief and help prevent future injuries by adding the Rhythm to your rehab routine.

RHYTHM BENEFITS

- Improve mobility
- Prevent injury
- Increase strength
- Boost metabolism
- Improve sleep
- Develop stronger bones
- Increase circulation

lifepro®

Access Lifepro TV, our library of free personal training videos on the web at pawrunner.lifeprofitness.com to learn how to get the most out of your Lifepro® PawRunner and achieve the results you want.

YOU'VE GOT THIS

Lifeprousa Lifeprousa support@lifeprofitness.com