www.forgingmount.com

Instruction Manual V1.1

FULL MOTION
TV WALL MOUNT

Model :. HY9467-B

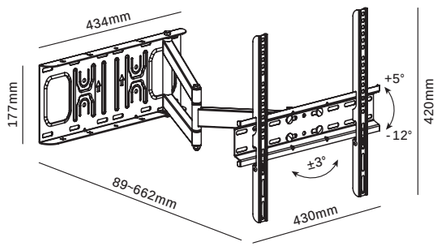

VESA: 400X400mm (Max)

Getting Started

Does your TV (including accessories) weigth more than 77 lbs. (35 kg) ?
No — Perfect!
Yes — This mount is NOT compatible.

77lbs (35kg)

⚠WARNING: Exceeding the weight capacity can result in serious personal injury or damage to equipment! It is the installers's responsibility to make sure the weight of the TV (with accessories) does not exceed 77 lbs (35 kg).

What is your wall made of ?

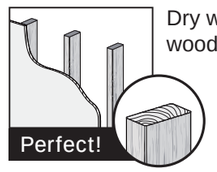

Dry wall with woodstuds ?

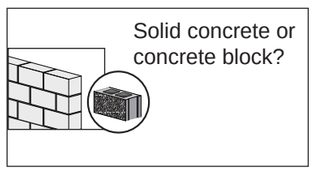

Solid concrete or concrete block?

Please read through these instructions completely to be sure you're comfortable with this install process. Also check your TV owner's manual to see if there are any special requirements for mounting your TV.

If you do not understand these instructions or have doubts about the safety of the installation, assembly or use of this product,please contact US via: **forgingmount888@163.com**

⚠ CAUTION: Avoid potential personal injuries and property damage!

- This product is designed for use in wood stud/concrete walls DO NOT install into drywall.
- The wall must be capable of supportingfive times the weight of the TV and mount combined.
- Do not use this product for any purpose not explicitly specified by manufacturer.
- Manufacturer is not responsible for damage or injury caused by incorrect assembly or use.

Tools Needed

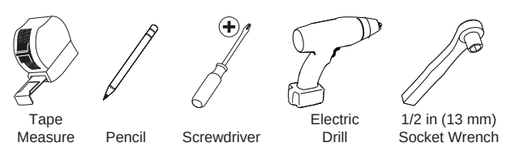

Hardware Included

⚠ WARNING:This product contains small items that could be a choking hazard if swallowed. Before starting assembly, verify all parts are included and undamaged. If any parts are missing or damaged, do not return the damaged item to your dealer; contact with Customer Service. Never use damaged parts!
NOTE: Not all parts and hardware included will be used.

Arm Assembly/ Wall Plate

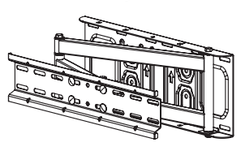

01 x1

TV Bracket



02 x2

Level



03 x1

Velcro Tie



04 x4

Lag Screw



ST7.3X57mm
A x6

Lag Bolt Washers



B x6

Wall Anchor



C x6

⚠ WARNING:
Installation must use the screws and accessories provided by our company, otherwise we are not responsible for any problems.

TV Screws

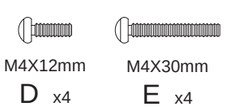

M4X12mm
D x4

M4X30mm
E x4

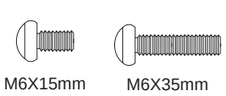

M6X15mm
F x4

M6X35mm
G x4



M8X15mm
H x4

M8X30mm
I x4

M8X50mm
X x4

TV Washers



Ø5
J-1x4

Ø8
J-2x4

Wrench



M x1

TV Spacers



L2.5MM
K x8

L10MM
L x4

L22MM
T x4

Step 1-1 Measure Your TV Hole Pattern

Width _____ mm x Height _____ mm

100 mm = 10 cm ≈ 3.9 in.
200 mm = 20 cm ≈ 7.9 in.
300 mm = 30 cm ≈ 11.8 in.
400 mm = 40 cm ≈ 15.7 in.

inch dimensions are approximate

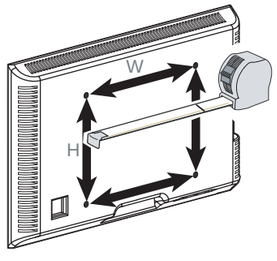

Minimum VESA pattern:
100mm/3.9 in.(W)x100mm/3.9 in.(H)

Step 1-2 Select TV Screw Diameter

Hand thread screws into the threaded inserts on the back of your TV to determine which screw diameter (M4, M6, or M8) to use.

M4 M6 M8

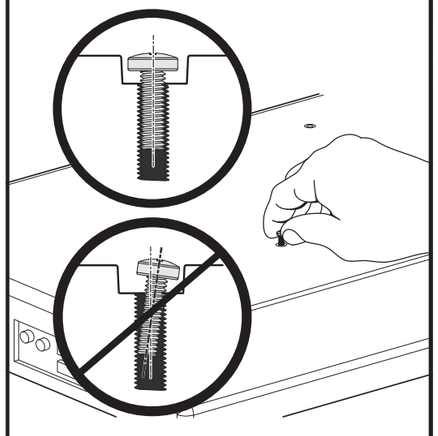

Standard configurations are shown. For special applications, or if you are uncertain about your hardware selection, you can contact at: **forgingmount888@163.com**

⚠CAUTION: Verify adequate thread engagement with the screw/washer/spacer combination and TV bracket.
-Too short will not hold the TV.
-Too long will damage the TV.

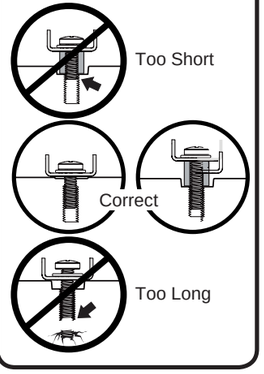

Step 1-3 Secure the TV Brackets to the back of TV

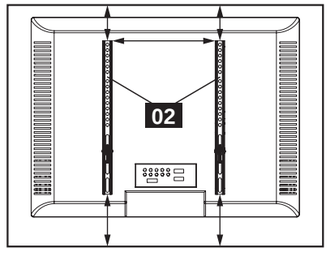

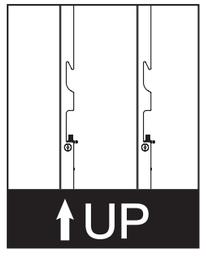



⚠CAUTION:Ensure the TV brackets [02] are EQUALLY CENTERED on your TV and securely fastened in place.

⚠PLEASE NOTE: The bolt hole locations on your TV may vary in accordance with the manufacturers design of the TV. We are only illustrating possible locations of the bolt holes.

Option A (For Flat Back TV)

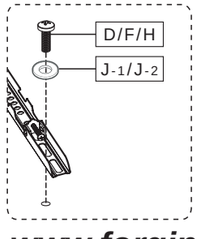

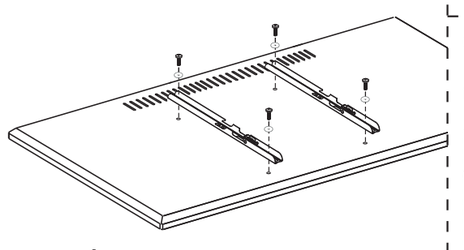

Option B (For Round Back TV)

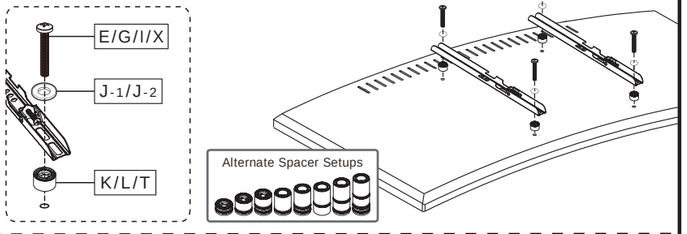

Option C (For TV with A “Bump”)

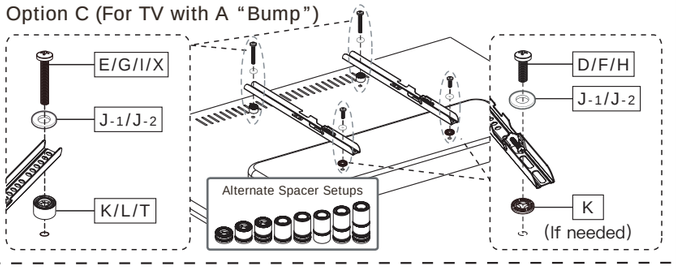

Option D

For cable interference or inset holes, use spacers to create extra space between the TV and TV brackets.

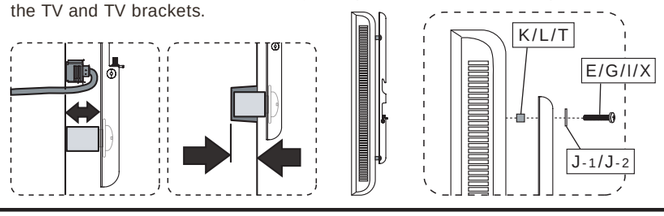

www.forgingmount.com

Step 2A Wall Plate Install (Wood Stud)

⚠ CAUTION: Avoid potential personal injury or property damage! All Lag Bolts (A) MUST BE firmly tightened to prevent unwanted movement of the Wall Plate **01** .

- Drywall covering the wall must not exceed 5/8 in.(16mm)
- Minimum wood stud size: common 2x4 in. (51x102mm) nominal 1½ x3½ in.(38x89mm)

⚠ CAUTION: Ensure the Wall Plate **01** is securely fastened to the wall before continuing on to the next step.

2A-1

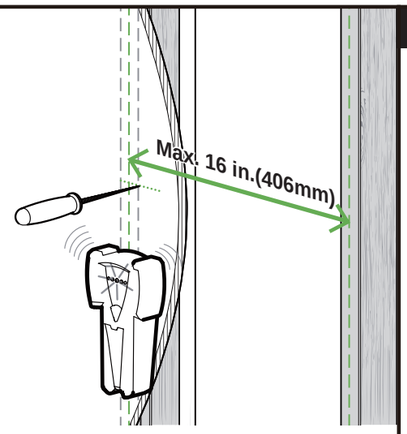

Locate your studs. Verify and mark the center of the studs by finding the stud edges using an awl, a thin nail, or an edge-to-edge stud finder.

2A-2

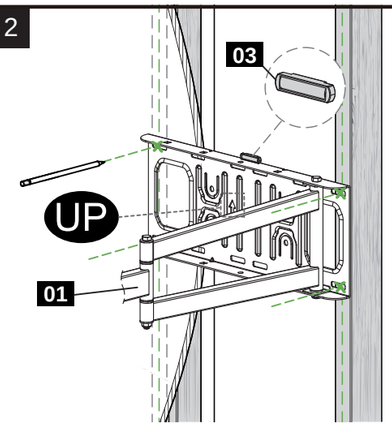

Position the Arm and Wall Plate **01** at your desired height and line up the holes with your stud center line. Level the wall plate and mark the holes.

2A-3

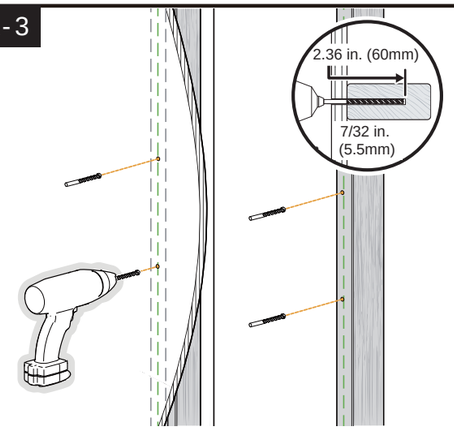

Drill 4 pilot holes using a 7/32 in (5mm) diameter drill bit.
❗IMPORTANT: Pilot holes must be drilled to a depth of 2.36 in.(60mm). Be sure to drill into the center of the stud.

2A-4

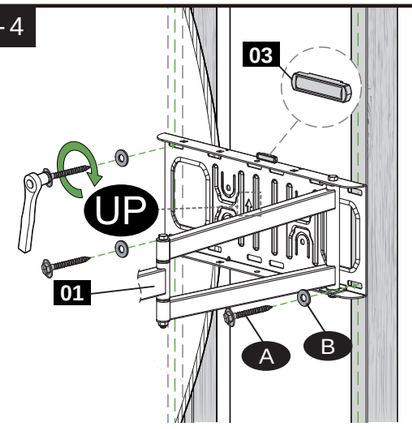

Install wall plate **01** using lag screws (A) and washers (B) . Tighten the lag screws only until they are pulled firmly a gainst the wall plate **01**.

Step 2B Wall Plate Install (Solid Concrete or Concrete Block)

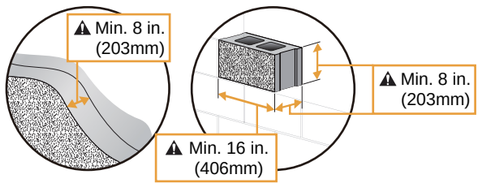

⚠ CAUTION: Avoid potential personal injuries and property damage!

- Minimum solid concrete thickness: 8 in.(203mm)
- Minimum concrete block size: 8 x 8 x 16 in.(203x203x406mm)
- Minimum horizontal space between fasteners: 16 in.(406mm)
- Mount wall plate **01** directly onto the concrete surface.

2B-1

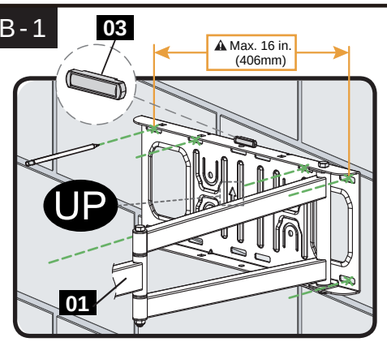

Position arm assembly/wall plate **01** at your desired height. Level then mark the six hole locations.

2B-2

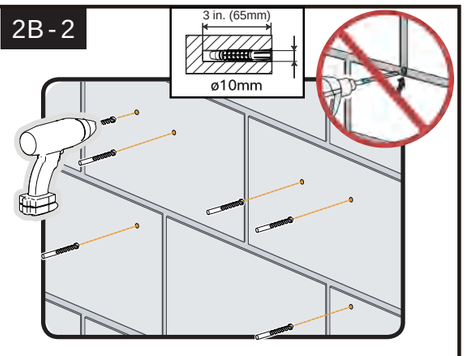

Drill six pilot holes using a 3/8 in. (10 mm) masonry drill bit.
❗IMPORTANT: Pilot holes must be drilled to a depth of 2.56 in. (65 mm). Never drill into the mortar between blocks.

2B-3

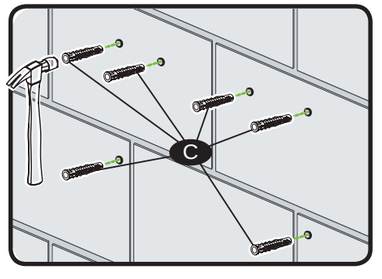

Insert six wall anchors (C) (10x50mm) to the wall
⚠CAUTION: Be sure the anchors are seated flush with the concrete surface.

2B-4

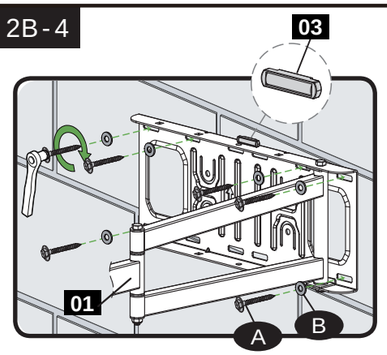

Install arm assembly / wall plate **01** with six lag screws (A) and washers (B)
⚠CAUTION: Improper use could reduce the holding power of lag screws (A)
DO NOT over-tighten the screws.

Step 3 Hang the TV onto the Arm Assembly

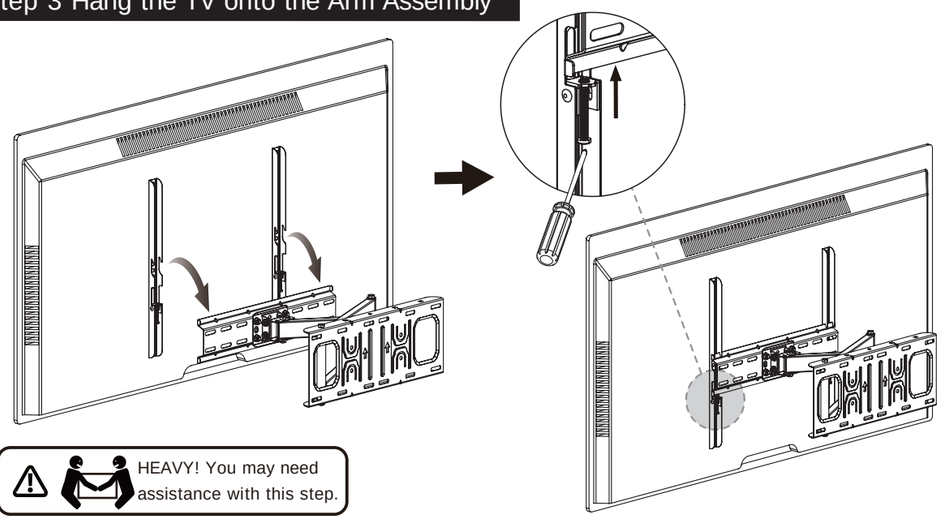

HEAVY! You may need assistance with this step.

Step 4 Tilt and level adjustment and cable management

Level

1. Slightly loosen the Nuts (N1)
2. Level your TV
3. Retighten Nuts (N1) to hold TV in Place.

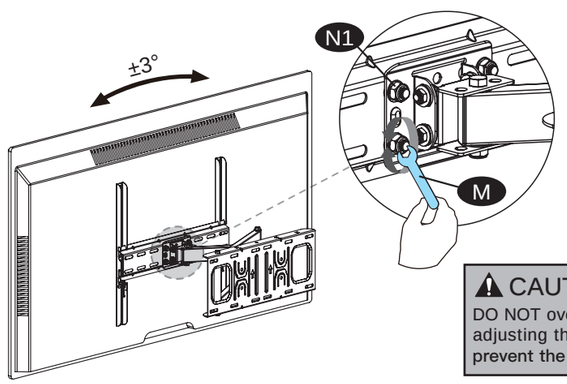

⚠ CAUTION!
DO NOT over-loosen the Nuts when adjusting the LEVEL /TILT angle to prevent the TV from falling off.

Tilt

1. Slightly loosen the Nuts (N2) .
2. Adjust TV to your desired tilting angle.
3. Fasten the Nuts (N2) to hold the tilting angle of the TV.

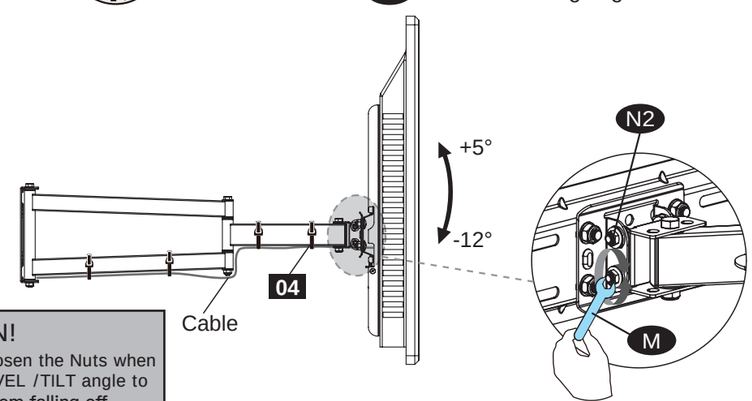

Made in China