B I L L I A R D S

Includes:

Table	15 Regulation Balls	2 57" Cue Sticks	1 Ball Rack
2 Cue Chalk	1 Regulation Cue Ball	1 Felt Brush	

SETUP/TAKEDOWN INSTRUCTIONS:

WARNING - TEAM LIFT REQUIRED - Requires 2 or more able-bodied adults capable of lifting more than 179lbs

With 2 or more adults carefully remove the table from the shipping box and lift it up on its side. Always keep your grip on the table to keep it from falling.

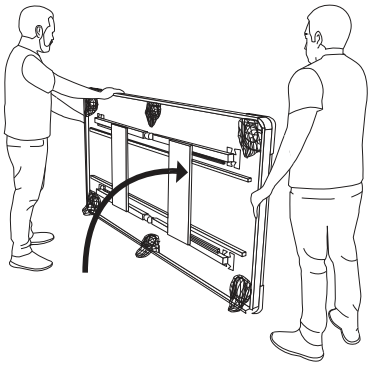

Unfold the table legs and ensure that the legs and hinges are fully extended and secured into place.

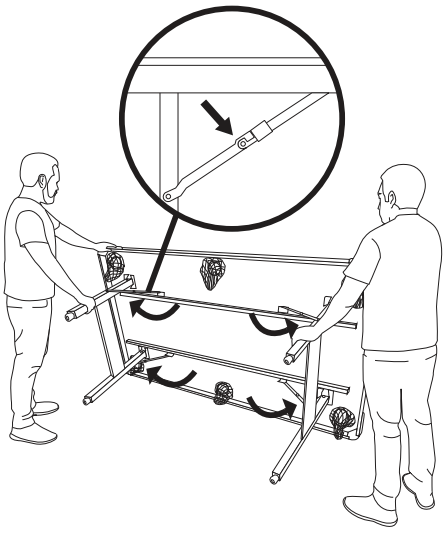

Once the legs and hinges are secured into place, fully lift the table up off the ground and carefully set it down upright with all legs touching the floor. Secure the leg locks over the hinges at each table leg and make sure the table is steady.

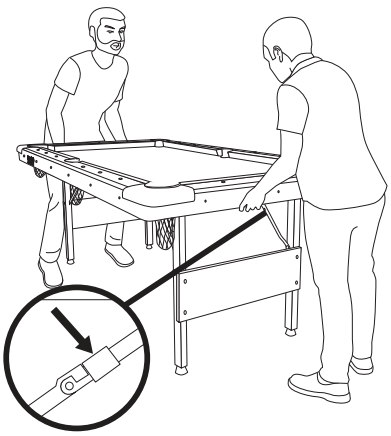

Always confirm that the table is free of damage or defects before use and contact Info@PlayGoSports.com for assistance.

Warning: When lifting do NOT leverage the weight of the table on the legs, as this can cause serious damage and injury. The table must be fully lifted off the ground by 2 or more able bodied adults.

*Assemble the sticks by screwing together a top piece and bottom piece for each stick

Game Care:

Use the included Felt Brush during and after play to ensure the tabletop stays clean and the felt stays vibrant. Only use a felt billiards brush on the tabletop as other brushes may cause damage. Cleaners may cause discoloration. The GoSports Billiards Table is designed for indoor use only, exposure to the elements will cause fading and damage to the table.

⚠ WARNING

- Assembly requires 2 adults
- The table is heavy so exercise care to not overexert during setup
- Beware of pinch points on the hinges
- Never sit, stand or lean on the table, and never allow children to play on or around the table
- Be careful with cue stick tips and always be aware of surroundings
- Do not crowd the table when a player is shooting as a ball may jump up out of the table
- Never leave out or use in the elements, always store indoors
- Table must be folded and put away after every use

Standard Game Play - 2 Players

Objective:

In standard 8 ball games the first player to pocket all of their balls (either stripes or solids), plus the 8 ball into the scoring pockets, wins.

Playing the Game:

- First rack the balls near the top center of the table by evenly placing stripes and solids inside the rack and the 8 ball in the center, and then remove the ball rack
- Players will decide who will "break" (coin toss, rock paper scissors, youngest, etc.)
- To break, a player will shoot from the opposite end using the white cue ball
- If any balls are pocketed in the break, the breaker will go again, and they can choose to play either stripes or solids for the remainder of the game by successfully pocketing a ball from either group
- If no balls are pocketed on the break, it is the next player's turn and they can choose to be either stripes or solids by successfully pocketing a ball from either group
- Once stripes and solids have been assigned, players will continue alternating turns attempting to pocket their respective balls into the scoring pockets using the cue ball
- Whenever a player successfully pockets one of their balls, they go again
- In the event of a foul, the offending player loses a turn (see 'Fouls') and the other player can reset the cue ball anywhere on the table for their turn

  Note: *Balls pocketed as a result of a foul remain pocketed*

- The 8 ball must be played last, if either player prematurely pockets the 8 ball they automatically lose

Fouls:

A player fouls if:

- The cue ball is pocketed
- The cue ball fails to hit any of that player's target balls (either stripes or solids)
- The cue ball fails to hit any target balls (either stripes or solids)
- A target ball jumps the table

Winning:

Once either player has pocketed all of their respective balls (either stripes or solids), and then pockets the 8 ball, that player wins!

Using the Cue Chalk:

Use the included Cue Chalk between shots to ensure the tip of the cue stick doesn't slide off the ball on contact, and to keep the Cue Stick in good condition. Chalking the cue stick is best done at an angle, away from the billiards table. Use a round motion over the tip of the cue to apply it evenly and set the chalk upright when done to avoid residue on the table.

Customer Service:

If you have any questions or concerns regarding your GoSports® Billiards Table, please reach out to us at **info@PlayGoSports.com** and we will get back to you right away. We stand behind our products 100% and want to make sure you get the full enjoyment that you paid for.