Razor®

Crazy Cart® shift™

OWNER'S MANUAL

Read and understand this entire manual <u>before</u> allowing child to use this product! For assistance contact Razor. DO NOT RETURN TO STORE.

NOTE: Manual illustrations are for demonstration purposes only. Illustrations may not reflect exact appearance of actual product. Specifications subject to change without notice.

Please have your product along with the 19 character product I.D. code with you before contacting Razor for warranty assistance and/or replacement parts.
Product I.D. Code: _____ - _____ - _____

CONTENTS

Safety Warnings 1-2
Before You Begin 3
Assembly and Set-Up 4-5
Charging the Battery 5
Pre-Ride Checklist 6
How to Operate the Crazy Cart Shift 7-8
Repair and Maintenance 9-10
Troubleshooting Guide 11
Crazy Cart Shift Parts 12
Warranty and Contact Information 14

SAFETY WARNINGS

⚠WARNING: The Crazy Cart Shift is not the same as an "ordinary" go-kart and therefore **may require greater skill to ride than an ordinary go-kart.** The Crazy Cart Shift is designed to allow movement forward, backward, laterally, in drifting arcs and even to pivot around in circles-- and **instead of a "conventional" brake, it uses these features to also allow very quick stopping and braking.** It is extremely important to **start out slowly, and take the time to get familiar and comfortable** with the Crazy Cart Shift's unique directional control and braking abilities (described on pages 7 and 8), before attempting quick turns or other fast moving actions, or otherwise trying to make full use of the Crazy Cart Shift's capabilities. **Using this product requires flat open space, free of traffic or other obstacles.**

⚠WARNING: Riding any electric product can be a hazardous activity. Certain conditions may cause the equipment to fail without fault of the manufacturer. Like other electric ride-on products, the Crazy Cart Shift can and is intended to move, and it is therefore possible to lose control, fall off and/or get into dangerous situations that no amount of care, instruction or expertise can eliminate. If such things occur you can be seriously injured or die, even when using safety equipment and other precautions. RIDE AT YOUR OWN RISK AND USE COMMON SENSE.

⚠WARNING: PARENTAL AND ADULT RESPONSIBILITY AND SUPERVISION NECESSARY: This manual contains important safety information. It is your responsibility to review this information and make sure that all riders understand all warnings, cautions, instructions and safety topics, and assure that young riders are able to safely and responsibly use this product. Razor recommends that you periodically review and reinforce the information in this manual with younger riders, and that you inspect and maintain your children's product to ensure their safety.

⚠WARNING: PARENT CONTROLLED HIGH/LOW SPEED SWITCH: The Crazy Cart Shift has a HIGH-LOW speed switch which can be manually set by an adult before children ride it. This switch allows parents to reduce the Crazy Cart Shift speed for novice riders. See page 4.

Manufacturer's suggested minimum rider age is 8+ in the HIGH speed setting and 6+ in the LOW speed setting. The default setting is HIGH.

⚠WARNING: NOT FOR CHILDREN UNDER AGE 6 OR HEAVIER THAN 120 LB (54 KG). Because products, like the Crazy Cart Shift, can and do present potential hazards plainly associated with their use, it is well recognized THE NEED FOR EXERCISE OF PARENTAL RESPONSIBILITY IN SELECTING RIDING PRODUCTS APPROPRIATE TO THE AGE OF A CHILD, OR PARENTAL SUPERVISION IN SITUATIONS IN WHICH CHILDREN OF VARIOUS AGES MAY HAVE ACCESS TO THE SAME RIDING PRODUCTS, IS IMPORTANT. Not every product is appropriate for every age or size of child, and different age recommendations are found within this category of product which are intended to reflect the nature of the hazards and the expected mental or physical ability, or both, of a rider to cope with the hazards.

Razor recommends that children under the age of 6 not be permitted to use this product. This recommendation is based not just on age or weight or height – it reflects consideration of expected maturity and skills as well as physical size. The recommended rider age of 6 years or older is only an estimate and can be affected by the rider's size, weight or skills – not every child 6 years old will be suited to the product. Certainly, any rider unable to fit comfortably on the Crazy Cart Shift should not attempt to ride it, but a **parent's decision to allow his or her child to ride this product should be based on the child's maturity, skill, and ability to follow rules. Razor emphasizes that adults are strongly advised not to disregard Razor's recommendations or permit younger children to ride the Crazy Cart Shift.**

DO NOT EXCEED THE WEIGHT LIMIT OF 120 lb (54 kg). Rider weight alone also does not necessarily mean a person's size is appropriate to fit or maintain control of the Crazy Cart Shift. Keep this product away from small children and remember that this product is intended for use only by persons who are, at a minimum, completely comfortable and competent while operating the product.

Persons with any mental or physical conditions that may make them susceptible to injury, impair their physical dexterity or mental capabilities to recognize, understand, and follow safety instructions, and to be able to understand the hazards inherent in a product's use, should not use or be permitted to use products inappropriate for their abilities. Persons with heart conditions, head, back or neck ailments (or prior surgeries to these areas of the body), or pregnant women, should be cautioned not to operate this product.

NOTICE: This manual contains many warnings and cautions concerning the consequences of failing to maintain, inspect or properly use your electric ride-on product. Because any incident can result in serious injury or even death, we do not repeat the warning of possible serious injury or death each time such a possibility is mentioned.

CHECK AND MAINTAIN CRAZY CART SHIFT
Before use, check to confirm that any and all covers and guards are in place and in serviceable condition. Check that the parts are functioning properly, and that the main driving wheel is not worn out and needs to be replaced. The Crazy Cart Shift should be maintained and repaired in accordance with the manufacturer's specifications, using only the manufacturer's authorized replacement parts, and should not be modified from the manufacturer's original design and configuration. Replace worn or broken parts immediately.

⚠WARNING: SAFE OPERATION REQUIRES CAREFUL ATTENTION. This product does not have a traditional brake – stopping is done using the accelerator pedal and steering. Read "How to Operate" section on pages 7 and 8 of this manual and practice to develop skills in using the Crazy Cart Shift.

Always check and obey any local laws or regulations which may affect the locations where the Crazy Cart Shift may be used. The Crazy Cart Shift is meant to be used on private property and on closed courses, and not on public streets or sidewalks. Do not ride your electric product in any areas where pedestrian or vehicle traffic is present.

Do not turn the power switch in the Crazy Cart Shift to **ON** or depress/activate the accelerator pedal unless you are seated and in a safe, outdoor environment suitable for riding. Always turn the power switch to **OFF** before exiting the Crazy Cart Shift.

Keep your fingers and other body parts away from the motor, steering system, wheels and all other moving components.

Maintain a hold on the steering wheel at all times. Do not touch the hub motor on your Crazy Cart Shift when in use or immediately after riding as these parts can become very hot.

Ride defensively. Watch out for potential obstacles that could catch your wheel(s) or force you to swerve suddenly or lose control. Be careful to avoid pedestrians, skaters, skateboards, scooters, bikes, children or animals who may enter your path, and respect the rights and property of others.

SAFETY WARNINGS

This product was manufactured for performance and durability, but is not impervious to damage. Bumping into obstacles or other aggressive riding can overstress and damage any product, including the Crazy Cart Shift, and the rider assumes all risks associated with high-stress activity. This product is not a "bumper car."

Never carry passengers or allow more than one person at a time to ride the electric product.

Never use headphones or a cell phone when riding. Never hitch a ride with another product.

Do not ride the Crazy Cart Shift in wet or icy weather and never immerse this electric product in water, as the electrical and drive components could get damaged by water or possibly create other unsafe conditions.

Wet, slick, bumpy, uneven or rough surfaces may increase risks. Do not ride this electric product in mud, ice, puddles or water. Avoid excessive speeds that can be associated with downhill rides. Never risk damaging surfaces, such as carpet or flooring, by using an electric product indoors.

Never use near steps or swimming pools.

Do not ride at night or when visibility is limited.

You may see people on TV or videos performing stunts and trick maneuvers on the Crazy Cart Shift. These are people who have been practicing a long time and who accept the risks of trick riding. Do not assume that you can attempt to do the same tricks without great risk.

Be careful and know your limitations. Risk of injury increases as the degree of riding difficulty increases. The rider assumes all risk associated with aggressive riding activities.

PROPER RIDING ATTIRE

Always wear proper protective equipment, such as an approved safety helmet (with chin strap securely buckled). A helmet may be legally required by local law or regulation in your area. Elbow pads and kneepads, a long-sleeved shirt, long pants and gloves are recommended. Always wear athletic shoes (lace-up shoes with rubber soles). Never ride barefooted or in sandals and keep shoelaces tied and out of the way of the wheels and motor.

USING THE CHARGER

The charger supplied with the Crazy Cart Shift should be regularly examined for damage to the cord, plug, enclosure and other parts. In the event of such damage, the Crazy Cart Shift must not be charged until the charger has been repaired or replaced.

Use only with the recommended charger.

Use caution when charging.

The charger is not a toy. Charger should be operated by an adult.

Do not operate charger near flammable materials.

Unplug charger and disconnect from Crazy Cart Shift when not in use.

Always disconnect from the charger prior to wiping down and cleaning your Crazy Cart Shift with damp cloth.

FAILURE TO USE COMMON SENSE AND HEED THE WARNINGS INCREASES RISK OF SERIOUS INJURY.
USE WITH APPROPRIATE CAUTION AND SERIOUS ATTENTION TO SAFE OPERATION.

BEFORE YOU BEGIN

TURN POWER SWITCH OFF BEFORE CONDUCTING ANY ASSEMBLY OR MAINTENANCE PROCEDURES.
Remove contents from box. Remove the separators that protect the components from damage during shipping. Inspect the contents of the box for scratches in the paint, dents or kinked cables that may have occurred during shipping. Because the Crazy Cart Shift was 99 percent assembled and packed at the factory, there should not be any problems, even if the box has a few scars or dents.

❑ Estimated Assembly and Set-Up Time

Razor recommends assembly by an adult.
Allow up to 5 minutes for assembly, not including initial charge time.
Allow up to 12 hours for initial charge.

Charger
(Note: Charger design may vary from one shown)

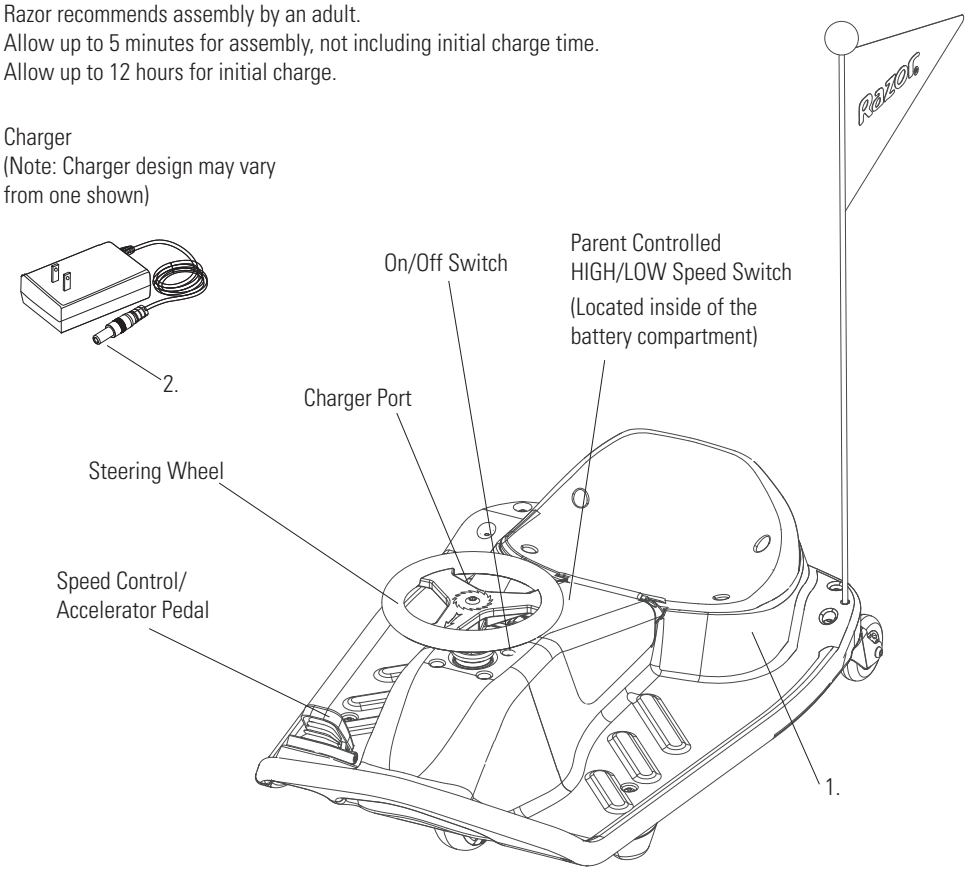

❑ Required Tool

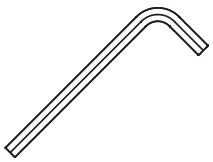

4 mm Allen Wrench
6 mm Allen Wrench
(Included)

⚠ WARNING:
DO NOT USE NON-RAZOR PARTS WITH YOUR CRAZY CART SHIFT. The Crazy Cart Shift has been built to certain Razor design specifications. The original equipment supplied at the time of sale was selected on the basis of its compatibility with the frame and all other parts. Certain aftermarket components may not be compatible. Use of non-Razor parts will void the warranty.

Product ID Locations:
(See locations at the left)

1. Seat
2. Charger
3. Box (not shown)

⚠ WARNING:
Turn power switch to **OFF** before conducting any assembly or maintenance procedures.

Plastic Bag Contents:

- Charger
- Allen Wrenches
- Owner's Manual

❑ Steering Wheel

Required Tool: 6 mm Allen Wrench (included)

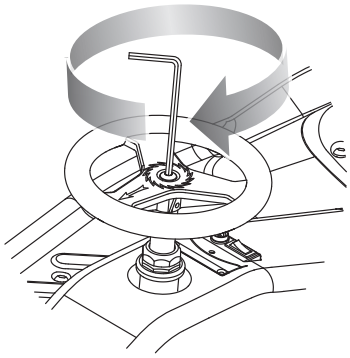

1 Tighten the screw with 6 mm Allen wrench.

⚠ WARNING:
Failure to properly tighten the steering bolt may allow the steering wheel to dislodge while riding and may cause you to lose control.

❑ Parent Controlled HIGH/LOW Speed Switch

Required Tool: 4 mm Allen Wrench (included)

Note: The Crazy Cart Shift is set on the HIGH speed setting at the factory.

The HIGH setting allows for speeds up to 8 mph (13 km/h).
The LOW setting allows for speeds up to 2.5 mph (4 km/h).

Note: The red speed switch is located inside of the battery compartment.

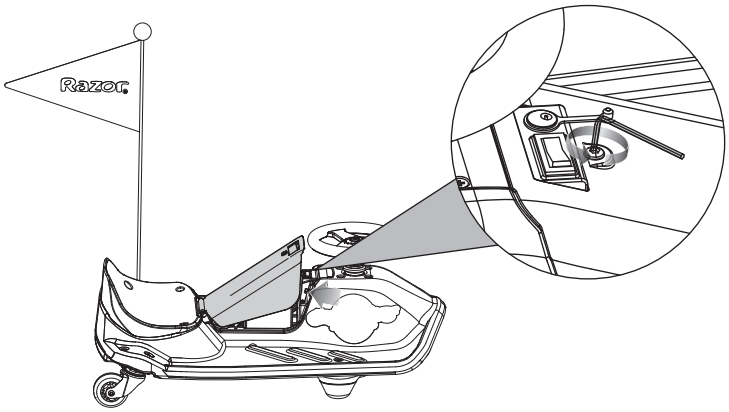

1 Unscrew the battery cover screw with 4 mm Allen wrench and lift the battery cover.

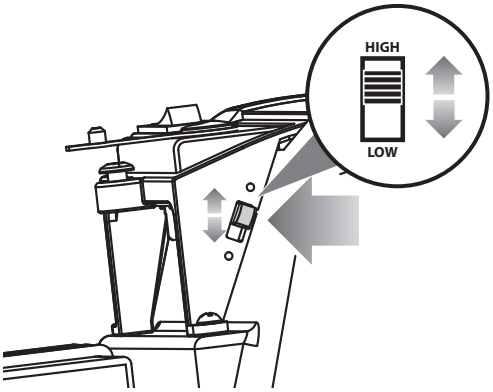

2 Adjust the speed setting by pushing button up for HIGH speed (ages 8+) or down for LOW speed (ages 6+).

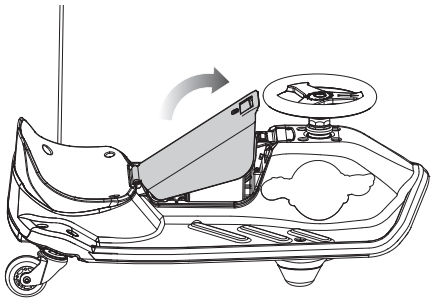

3 Close the battery cover and tighten the screw with 4 mm Allen wrench.

ASSEMBLY AND SET-UP

❑ Attaching the Flag

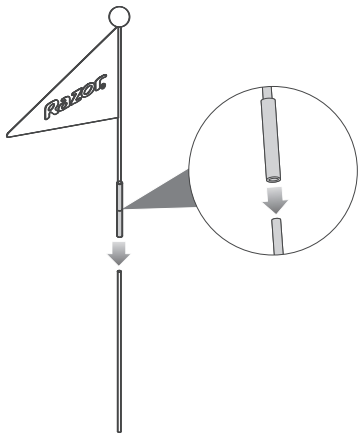

1 Assemble flag as shown.

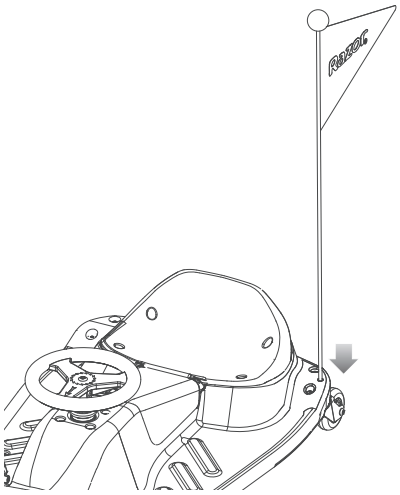

2 Insert flag into fixed hole located on the rear of the frame.

CHARGING THE BATTERY

Your Crazy Cart Shift may not have a fully charged battery; therefore you must charge the battery prior to use.

- Initial charge time: 12 hours.
- Recharge time: 12 hours, even if the light turns green Recommended maximum charging time is 24 hours.
- Always charge the battery immediately after riding.
- Fully charge battery before storing for extended periods of time.
- Unplug charger from the wall outlet when not in use.
- Failure to recharge battery at least once per month may result in a battery that will not accept a charge.
- Make sure the power switch is turned **OFF** when unit is not in use. If the power switch is left on for an extended period of time, the battery may reach a stage at which it will no longer hold a charge.
- To ensure long battery life, never store the product in freezing or below freezing temperatures! Freezing will permanently damage the battery.
- Run time: Up to 40 minutes of continuous ride time at the HIGH speed setting and 80 minutes at the LOW speed setting. Run time may vary depending on riding conditions, rider weight, climate, and/or proper maintenance.
- Battery life can vary depending on proper maintenance and usage of the product.

Charger

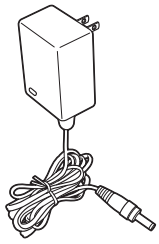

Note: Charger design may vary from one shown.

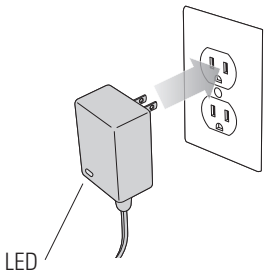

1 Plug the charger plug into wall outlet. The light on the charger should be green.

Note: If green light (LED) does not turn on, try a different outlet.

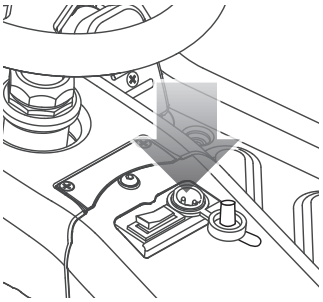

2 Make sure the power switch is in the **OFF** position. Plug the charger into the charger port. The light on the charger should turn red during charging. The light on the charger will turn green again when charging is complete.

⚠ **WARNING:** Use ONLY with the recommended charger. Batteries are only to be charged under adult supervision. The charger is not a toy. Always disconnect the charger before wiping down and/or cleaning the Crazy Cart Shift with a damp cloth.

The charger supplied with the Crazy Cart Shift should be regularly examined for damage to the cord, plug, enclosure and other parts. In the event of such damage, the Crazy Cart Shift must not be charged until it has been repaired or replaced.

Chargers have built-in overcharge protection to prevent battery from being overcharged.

Note: If the charger gets warm during regular use, this is a normal response and is no cause for concern. If your charger does not get warm during use, it does not mean that it is not working properly.

Wall outlet - Green (stand by)
Wall outlet and unit - Red (charging)
Wall outlet and unit - Green (charged)

Note: Continue charging unit even if light turns green prior to 12 hours.

⚠ **WARNING:** Failure to recharge the battery at least once a month may result in a battery that will no longer accept a charge.

PRE-RIDE CHECKLIST

Wheels
Practice drift riding only in wide open areas clear from curbs, parking blocks and other obstacles. Impacting the wheels against any hard surface can damage the wheels. Wheels are not covered under your limited warranty.

Frame, Fork and Steering Wheel
Check for cracks or broken connections. Although broken frames are rare, it is possible for an aggressive rider to run into a curb or object and crack or break a frame. Get in the habit of inspecting your Crazy Cart Shift on a regular basis.

Hardware/Loose Parts
Before every ride, check all parts, such as nuts, bolts, cables, fasteners, etc., to ensure they are secure and assembled correctly. There should not be any unusual rattles or sounds from loose parts or broken components. If the unit is damaged, do not ride. Reference "Safety Warnings" on pages 1 and 2 of this manual.

Safety Gear
Always wear proper protective gear, such as an approved safety helmet. Elbow pads and kneepads are recommended. Always wear athletic shoes (lace-up shoes with rubber soles) and keep shoelaces tied and out of the way of the wheels and motor. NEVER RIDE BAREFOOTED OR IN SANDALS.

Laws and Regulations
Always check and obey any local laws or regulations.

Insurance
Do not assume that your existing insurance policies necessarily provide coverage for electric product use. Check with your insurance company for information regarding insurance.

Storage
Prolonged exposure to UV rays, rain and the elements may damage the enclosure materials, store indoors when not in use.

Need Help? Visit our website for replacement parts, product support, a list of authorized service centers in the US and customer service contact information at **www.razor.com**. Please have the product I.D. code (located on the white label of your product) available for better assistance. Additional Customer Service contact information is listed at the back of this manual.

HOW TO OPERATE THE CRAZY CART SHIFT

Before you ride this exciting product, take the time to learn about the controls and their effects on how the Crazy Cart Shift moves. Start out slowly. With practice and care, you must familiarize yourself with these riding hints and tips so that your experiences with the Crazy Cart Shift will allow you to maximize fun while keeping in control.

Never turn the ON/OFF switch to **ON** before sitting down in the driver's seat of the Crazy Cart Shift. By getting yourself situated before turning the power **ON**, you won't risk losing your balance by pushing the accelerator pedal while standing as you get into (or out of) the Crazy Cart Shift. **Always** turn the ON/OFF switch to **OFF** before exiting the Crazy Cart Shift.

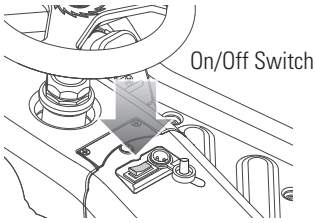

Important Control Features:

Parent Controlled HIGH/LOW Speed Switch

Your Crazy Cart Shift features a hidden speed control switch that allows parents to discreetly reduce (or raise) the Crazy Cart Shift's top speed. This limiter is intended for parents of younger children and those needing extra practice time to learn how the Crazy Cart Shift moves.

The switch has been hidden inside the Crazy Cart Shift's battery compartment, such that riders cannot access it without using an Allen wrench. There are two settings:

- When the switch is in the HIGH position, the Crazy Cart Shift has a top speed of 8 mph (13 km/h). This is the default setting and recommended for riders age 8 and older.
- When the switch is in the LOW position, the Crazy Cart Shift's top speed is limited to 2.5 mph (4 km/h) and the recommended minimum rider age is 6 years old.

Accelerator Pedal and Steering Wheel

The Crazy Cart Shift allows really creative drifting, spinning and turning that no ordinary go-kart can do. If you have ridden a Razor RipStik® or a Razor RipRider® 360, think about those caster wheels and how they allow rapid changes of direction; or how a Razor Ground Force® Drifter™ go-kart allows full speed rear-end drifting. The Crazy Cart Shift builds on these motions and adds even tighter turning possibilities through the fully rotational front drive wheel and the rear caster wheels. Practicing with the Crazy Cart Shift can lead to amazing fun, and it is important, as with all moving products, to always exercise caution when riding.

Accelerator Pedal

The Crazy Cart Shift has a foot pedal accelerator that controls the cart's speed. This variable speed accelerator allows you to drive the cart at a range of speeds from 0-8 MPH (0-13 KM/H) in the HIGH setting and 0-2.5 MPH (0-4 KM/H) in the LOW setting, depending on how much it is depressed. This ability to dynamically speed up and slow down is a key to controlled drifting. All stopping should be preceded by releasing any pressure on the accelerator pedal.

Steering Wheel

The Crazy Cart Shift's steering wheel is different from a normal car or cart in a number of ways. The most important thing to remember about the Crazy Cart Shift's steering wheel is that the arrow on it points in the direction where the cart is going to travel, regardless of how the rest of the cart is oriented. Simply keep pointing the arrow where you want the cart to go (varying pressure on the accelerator pedal can change how the back of the Crazy Cart Shift follows, as described below).

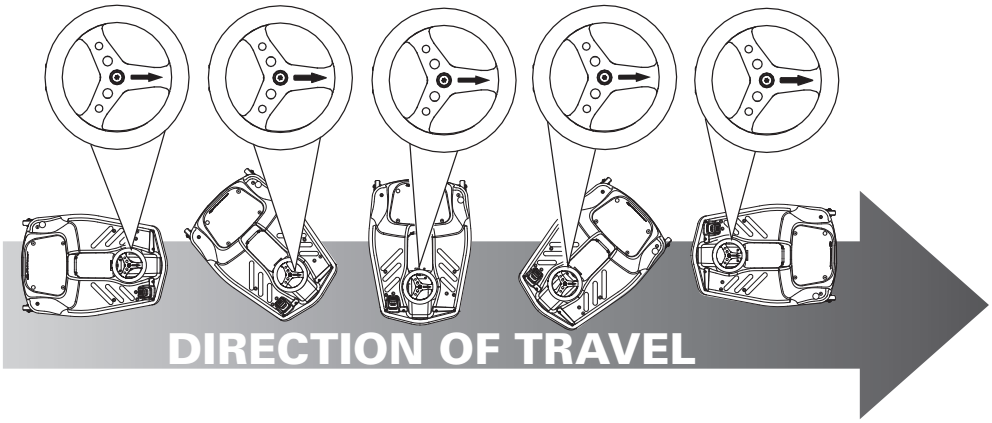

The Crazy Cart Shift's steering wheel is able to rotate more than 170° in each direction. The steering wheel has a "hard stop" when it has reached the limit of its turning – it won't keep going around all the way, but by turning fully one direction or fully the other direction, you can ride the Crazy Cart Shift backwards - and by turning at or near 90° the Crazy Cart Shift can go in a very, very tight circle (be careful to avoid losing control by turning so much as to risk becoming dizzy).

IMPORTANT: Always select a riding area that is level, smooth, dry, and completely free of traffic or obstacles. DO NOT RIDE AROUND VEHICLES!

Riding Tip: Learning when to push and when to let off of the accelerator pedal will improve your ability to do spins, drifts, and tricks smoothly. The best way to learn the Crazy Cart Shift's abilities is to try things at low speed.

WARNING: Excessive duration or speed in spins can lead to loss of balance, loss of control and tipping. Keeping one's limbs and head tucked in tight to the center of the Crazy Cart Shift can reduce risks of tipping over because ergonomic forces can increase risk of tipping if the body is leaning outwards and/or the spinning speed accelerates too greatly. Take your foot off the accelerator pedal if spinning becomes too fast to control, do not try to accelerate out of a spin. The Crazy Cart Shift may accelerate faster when lighter riders are on it, which is one reason the minimum recommended age is 6. Be safety conscious!

HOW TO OPERATE THE CRAZY CART SHIFT

The steering configuration of the Crazy Cart Shift's integrated drive and steering mechanism is similar to what some might call "bumper car" design. It has no self-correcting camber or castering features (meaning the steering tube goes straight up and down so the wheel doesn't "align" itself on its own). Such steering might, in certain circumstances, shimmy or vibrate a little -- this is normal. Usually it is the result of an uncoordinated or adverse control condition. If you feel a shimmy in the steering, a change of direction ("counter-steering") and/or speed change helps re-establish smooth control.

Spinning, Drifting and Stopping the Crazy Cart Shift

The best use of the Crazy Cart Shift involves careful coordination of the steering and the accelerator. The majority of spins and drifts that can be done in the Crazy Cart Shift are accomplished by careful accelerator control and deliberate manipulation of the steering wheel. Learning where to point the arrow on the steering wheel and when to add or reduce power are the keys to smoothly controlling tricks. Smooth riding also increases the run time between charges. When first getting oriented with the Crazy Cart Shift, it is highly recommended that riders carefully apply the accelerator and take time to get familiar with the results of combining counter-steering and accelerator pedal control to manipulate the Crazy Cart Shift's spins and drifts.

There is no separate brake on the Crazy Cart Shift, but with practice it is easy to stop. Of course, removing your foot from the accelerator pedal will slow the cart down as a result of friction in the drive train. To stop the Crazy Cart Shift's forward motion immediately, take your foot off of the accelerator pedal and turn the steering wheel 90° to either side. Removing your foot from the accelerator pedal and turning the steering wheel will result in the Crazy Cart Shift spinning or drifting in a circle and slowing to a stop. By turning the steering wheel 90° and taking your foot off the accelerator pedal, the rider can immediately arrest forward motion and instead turn away. In this way, the Crazy Cart Shift can avoid collisions and evade objects in its path.

For your safety, take the time to get familiar and comfortable with various combinations of depressing the accelerator pedal and turning the steering wheel to learn how to slow down and stop while maintaining control of the cart. Practice these skills for maximum rider safety.

These basic steering exercises may help to familiarize riders with their Crazy Cart Shift's capabilities:

1. First steer in a circle.
2. Make the same circles, vary how much you depress the accelerator pedal and note how the Crazy Cart Shift reacts as you increase and decrease speed while turning. You should notice that accelerating hard while turning results in the Crazy Cart Shift spinning out.
3. Still making the same circles, experiment with keeping the body of the cart from spinning out by 'counter-steering'. Counter-steering to stop the Crazy Cart Shift from spinning out is achieved by pointing the arrow on the steering wheel opposite the direction that the Crazy Cart Shift is spinning out in. For example, if you are turning hard toward the right, the cart may spin out in a clockwise direction. This spinning out can be countered by turning the steering wheel slightly to the left and/or reducing pressure on the accelerator pedal. Practice is the best way to master this skill.
4. Practice bringing the Crazy Cart Shift to a stop by taking your foot off the accelerator pedal and turning the steering wheel 90° to the left or right.
5. Practice staying "tucked in" during tight turns or spins.

WARNING: Recognize that these specialized riding features affect how the Crazy Cart Shift functions and require extra caution and attention to safe riding conditions and practices. Read and review the Safety Warnings on pages 1 and 2, and be extra careful with the Crazy Cart Shift to avoid traffic, obstacles and downhill environments. This is not a "bumper car" and is not designed to engage in collisions, jumping activities or for use on surfaces other than hardened, smooth, flat and dry areas.

Turn power switch "OFF" before beginning repair or maintenance:

❑ Rear Wheel Replacement

Required Tool: 5 mm Allen Wrench (not included)

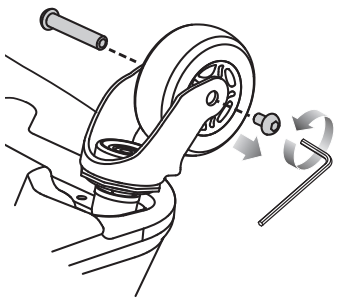

1 Remove the flag and carefully turn the product over. Loosen the 5 mm axle bolt.

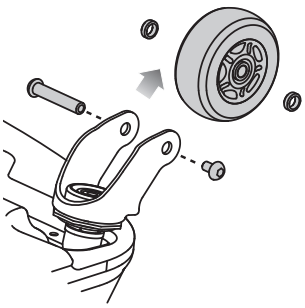

2 Remove the wheel and keep axle bolt and the two (2) spacers for reassembly. DO NOT throw these parts away.

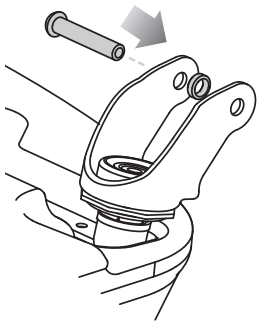

3 Insert the axle bolt.

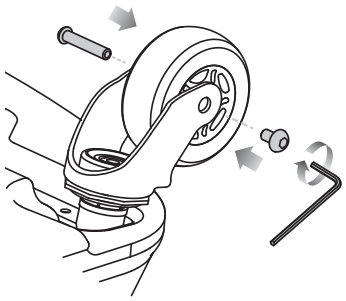

4 Insert new wheel and tighten the screws with the 5 mm Allen wrench.

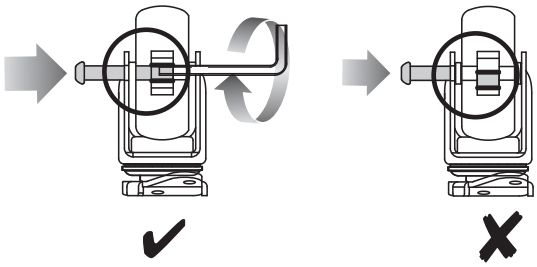

Note: Make sure the spacer on wheel is aligned to allow the axle bolt to go through.

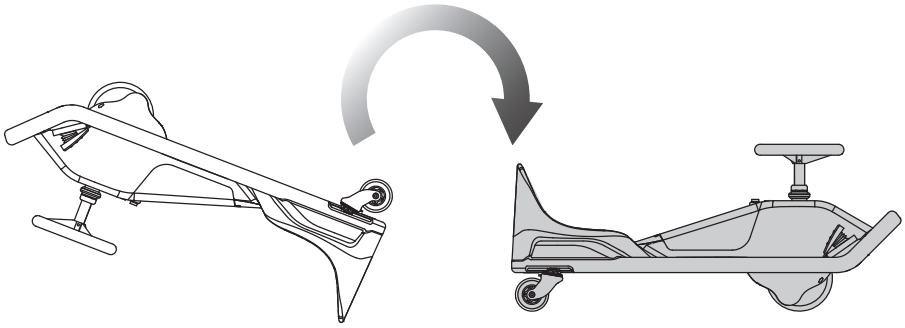

5 Rotate back to upright position. Place the flag into the product.

Need Help? Visit our website for replacement parts, product support, a list of authorized service centers in the US and customer service contact information at **www.razor.com**. Please have the product I.D. code (located on the white label of your product) available for better assistance. Additional Customer Service contact information is listed at the back of this manual.

❑ Battery Care and Disposal

Do not store in freezing or below freezing temperatures! To properly maintain your battery and ensure maximum battery life, carefully read the "Charging the Battery" section on page 5 of this owner's manual.

CONTAINS SEALED LEAD-ACID BATTERY. BATTERY MUST BE RECYCLED.

Disposal: Your Razor product uses a sealed lead-acid battery which must be recycled or disposed of in an environmentally safe manner. Do not dispose of a lead-acid battery in a fire. The battery may explode or leak. Do not dispose of a lead-acid battery in your regular household trash. The incineration, land filling or mixing of sealed lead-acid batteries with household trash is prohibited by law in most areas. Return exhausted batteries to a federal or state approved lead-acid battery recycler or a local seller of automotive batteries. If you live in Florida or Minnesota, it is prohibited by law to throw away lead-acid batteries in the municipal waste stream.

❑ Charger

The charger supplied with the electric product should be regularly examined for damage to the cord, plug, enclosure and other parts and in the event of such damage, the product must not be charged until it has been repaired or replaced.

Use ONLY with the recommended charger.

❑ Wheels

Wheels are subject to normal wear and tear. It is the responsibility of the user to periodically inspect wheels for excess wear, and adjust and replace components as required.

❑ Replacement Parts

The most frequently requested replacement parts are available for purchase at some Razor retail partners.
For the complete selection of replacement parts visit www.razor.com.

❑ Repair Centers

For a list of authorized Razor repair centers:
- Check online at www.razor.com.
- Additional Customer Service contact information is listed on the back of this manual.

In the US and Canada only:
For more information regarding recycling of rechargeable batteries, call toll free 1-800-822-8837, or visit http://www.call2recycle.org

⚠ **WARNING:** If a battery leak develops, avoid contact with the leaking acid and place the damaged battery in a plastic bag. Refer to the disposal instructions at left. If acid comes into contact with skin or eyes, flush with cool water for at least 15 minutes and contact a physician.

⚠ **WARNING:** Battery posts, terminals and related accessories contain lead and lead compounds. **Wash your hands after handling.**

TROUBLESHOOTING GUIDE

*Product(s) should be turned OFF and fully charged prior to doing any Troubleshooting
NOTE: All troubleshooting steps should be performed by an adult only

Problem	Possible Cause	Solution
Product does not run.	Undercharged battery.	Charge the battery. A new battery should have been charged for at least 12 hours before using the product for the first time and up to 12 hours after each subsequent use.
		Check all connectors. Make sure the charger connector is tightly plugged into the charging port and that the charger is plugged into a functioning wall outlet.
	Charger is not working.	Contact Razor Customer Service to get replacement charger.
Product was running but suddenly stopped.	Loose wires or connectors.	Check all wires and connectors to make sure they are tight.
Short run time.	Undercharged battery.	Charge the battery. A new battery should have been charged for at least 12 hours before using the product for the first time and up to 12 hours after each subsequent use.
	Battery is old and will not accept full charge.	Refer to page 5. Replace only with a Razor replacement battery.
Product runs sluggishly.	Riding conditions are too stressful.	Use only on solid, flat, clean and dry surfaces such as pavement or level ground.
	Product is overloaded.	Make sure you do not overload the product by allowing more than one rider at one time, exceeding the maximum weight limit, going up too steep a hill or towing objects behind the product.
Sometimes the product doesn't run, but other times it does.	Loose wires or connectors.	Check all wires connectors to make sure they are tight.
	Motor or electrical switch damage.	Contact your local Razor authorized service center for diagnosis and repair. Contact Razor customer service or visit www.razor.com.
Charger gets warm during use.	Normal response to charger use.	No action required. This is normal for some chargers and is no cause for concern. If your charger does not get warm during use, it does not mean that it is not working properly.

For more troubleshooting tips, a list of available replacement parts or to locate an authorized Service Center in your area, visit our website at www.razor.com or call toll free +1 866 467 2967 to speak to a live Customer Service Representative.

CRAZY CART SHIFT PARTS

Keep your product running for years with genuine Razor parts. Visit our website, www.razor.com, for more information on spare part availability. (Specifications subject to change without notice.)

1. Charger Port
2. On/Off Switch
3. Steering Bolt
   3-1. Wedge
4. Battery Cover
5. Flag
6. Steering Wheel
7. Battery Strap
8. Control Module
9. Battery
10. Seat
11. Stabilizing Posts (x2)
12. Foot Pedal (Throttle)
13. Headset (Upper/Lower)
14. Rear Caster Wheels (x2)
15. Front Fork
16. Front Wheel w/ Hub Motor
    16-1. Motor Cover

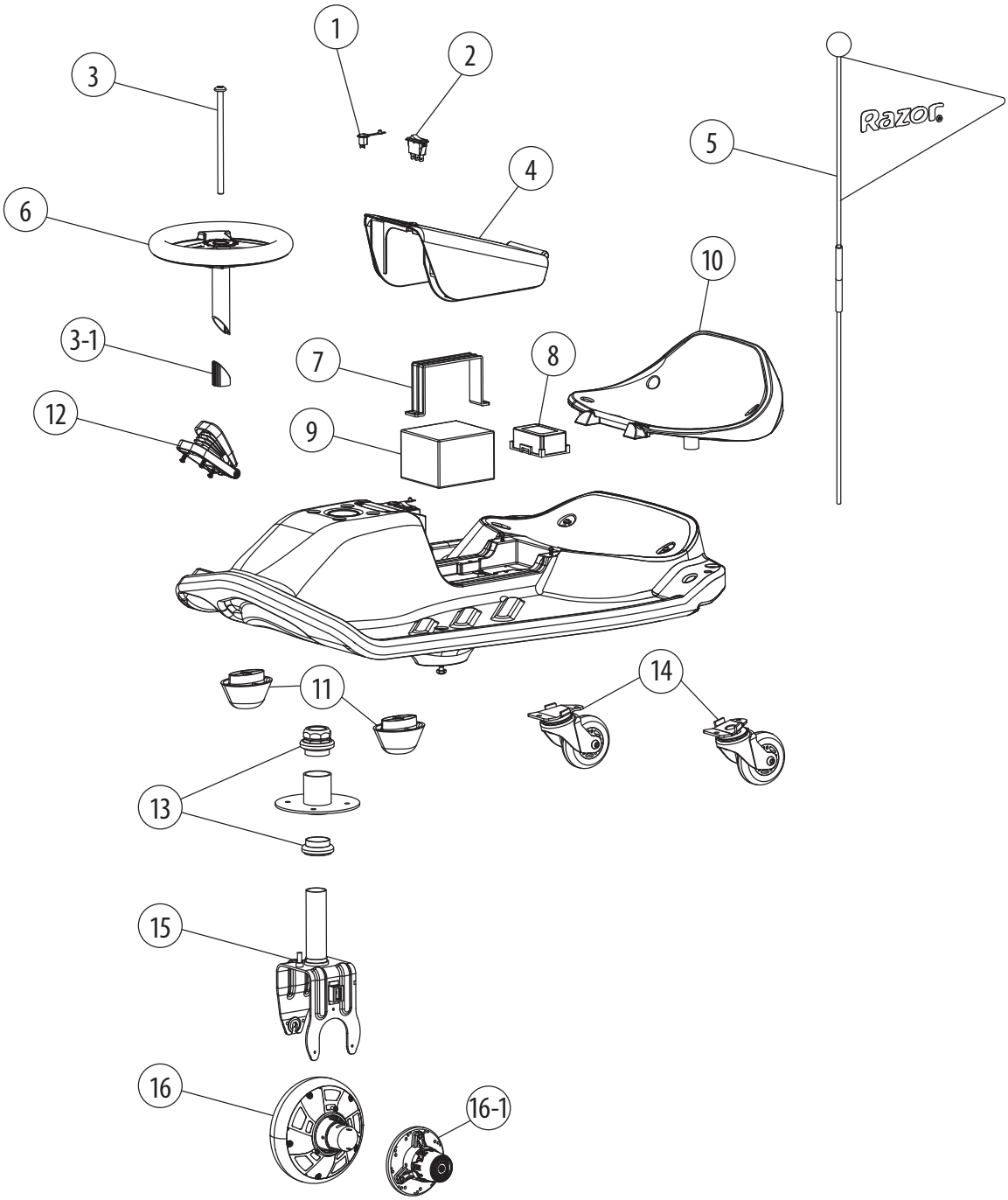

Need Help? Visit our website for replacement parts, product support, a list of authorized service centers in the US and customer service contact information at **www.razor.com**. Please have the product I.D. code (located on the white label of your product) available for better assistance. Additional Customer Service contact information is listed at the back of this manual.

NOTICE: INSURANCE
YOUR INSURANCE POLICIES MAY NOT PROVIDE COVERAGE FOR ACCIDENTS INVOLVING THE USE OF THIS SCOOTER/ELECTRIC RIDE-ON PRODUCT. TO DETERMINE IF COVERAGE IS PROVIDED, YOU SHOULD CONTACT YOUR INSURANCE COMPANY OR AGENT.

FCC COMPLIANCE

This device complies with Part 15 of the FCC Rules. Operation is subject to the following two conditions: (1) This device may not cause harmful interference, and (2) this device must accept any interference received, including interference that may cause undesired operation.

Note: This equipment has been tested and found to comply with the limits for a Class B digital device, pursuant to part 15 of the FCC Rules. These limits are designed to provide reasonable protection against harmful interference in a residential installation. This equipment generates, uses and can radiate radio frequency energy and, if not installed and used in accordance with the instructions, may cause harmful interference to radio communications. However, there is no guarantee that interference will not occur in a particular installation. If this equipment does cause harmful interference to radio or television reception, which can be determined by turning the equipment off and on, the user is encouraged to try to correct the interference by one or more of the following measures:

- Reorient or relocate the receiving antenna.

- Increase the separation between the equipment and receiver.

- Connect the equipment into an outlet on a circuit different from that to which the receiver is connected.

- Consult the dealer or an experienced radio/TV technician for help.

⚠ **WARNING:** Changes or modifications to this unit not expressly approved by the party responsible for compliance, could void the user's authority to operate the equipment.

WARRANTY

Razor Limited Warranty

The manufacturer warranties this product to be free of manufacturing defects for a period of 90 days from date of purchase. This Limited Warranty does not cover normal wear and tear, tire, wheels or cables, or any damage, failure or loss caused by improper assembly, maintenance, storage or use of the Razor Crazy Cart Shift.

This Limited Warranty will be void if the product is ever:
- used in a manner other than for recreation or transportation;
- modified in any way;
- rented.

The manufacturer is not liable for incidental or consequential loss or damage due directly or indirectly to the use of this product.

Razor does not offer an extended warranty. If you have purchased an extended warranty, it must be honored by the store at which it was purchased.

For your records, save your original sales receipt with this manual and write the serial number below.

_____

CUSTOMER SERVICE CONTACT INFORMATION

Need Help? Visit our website for replacement parts, product support, a list of authorized service centers in the US and customer service contact information at **www.razor.com**. Please have the product I.D. code (located on the white label of your product) available for better assistance. Additional Customer Service contact information is listed below:

AMERICAS

Razor USA LLC
P.O. Box 3610
Cerritos, CA 90703
USA

+1 866 467 2967
Monday - Friday
8:00 AM - 5:00 PM Pacific Time
customersupport@razorusa.com

EUROPE, MIDDLE EAST, AFRICA

Razor USA LLC (Europe)
Handelsweg 2
2742 RD Waddinxveen
Netherlands

+44 (0) 120 267 2702
info@razoreu.com

ASIA

Razor USA LLC (Asia)
P.O. Box 3610
Cerritos, CA 90703
USA

+81 50 7579 6622
info@razor-asia.com

UNITED KINGDOM AND IRELAND

Razor USA LLC (UK)
Unit 20
Hartnoll Business Centre
Post Hill, Tiverton
Devon EX16 4NG
UK

+44 (0) 120 267 2702
info@razoreu.com

AUSTRALIA AND NEW ZEALAND

Razor USA LLC
P.O. Box 4280
Auburn South
VIC 3122
Australia

+1 800 954 354 (AU)
+0 800 003 221 (NZ)
info@razoranz.com

IMPORTED IN JAPAN BY B-PLUS ASIA CORP.

Razor USA LLC
THE RIPSTIK COMPANY
Kurokawa 3-1, Asaoku,
Kawasaki, Kanagawa
215-0035 JAPAN

+81 (0) 44 328 9057 Tel
+81 (0) 44 328 9067 Fax
info@razor-asia.com

Printed in China for Razor USA LLC.

Copyright © 2003-2021 Razor USA, LLC. All rights reserved. Razor®, the Razor logo design and the Crazy Cart logo design are among the registered trademarks of Razor USA LLC in the United States and/or select foreign countries. Crazy Cart® Shift™ logo design is a trademark of Razor USA LLC.