UNDERCOVER™
TRUCK BED COVERS
www.UNDERCOVERINFO.COM

TONNEAU INSTALLATION GUIDE
Warranty, Care & Maintenance

Model 2070 Ford F150 Short Bed
2004 – Current



EASY AS 1-2-3! NORMAL INSTALLATION TIME 30 MINUTES

FORM # IG2070
Modified June 2005

For Warranty Issues, Contact Undercover Directly
(866) 900-8800 www.undercoverinfo.com

Model 2070 Ford F150 Short Bed 2004 – Current

PRE-INSTALLATION NOTES

1. Be sure to use only cleaners, waxes, etc., which are labeled 'Safe for Plastics'. Make sure that chemicals or substances, which are not labeled 'safe for plastics', do not come in contact with your Undercover. Failure to do so could cause discoloration and/or structural damage to your Undercover and will void your warranty.
2. Paint rubbing of the truck is normally not a problem, but is always a possibility with any tonneau. To ensure less chance of possible paint rubbing of the truck, it is suggested to install a tailgate protector and adhere Cab Skin®, Scotch Cal®, or similar product to the truck bed. These products can provide added assurance against paint rubbing.
3. Undercover Tonneaus are designed from trucks that do not have a bed liner (spray-in bed liners pose no problem). Trucks that do have under-the-rail or over-the-rail bed liners will require some minor trimming of the bed liner to ensure proper placement of the mounting brackets. Due to the wide variety of bed liner manufacturers, the modifications will vary slightly between different brands. Any modifications must be made to the bed liner and NOT to the Undercover mounting hardware. Modifications to the mounting hardware will result in improper installation and will void your warranty.

INSTALLATION KIT CHECKLIST

A: Hydraulic Struts
B: Stainless Steel Bolts 5/16" x 1 1/4"
C: J-Hooks & Wall Mounting Screws
D: Clamps
E: Spiral Rings
F: Stainless Steel Washers 5/16"
G: Stainless Steel Lock Washers 5/16"
H: Forward Mounting Brackets
I: Rear Mounting Brackets

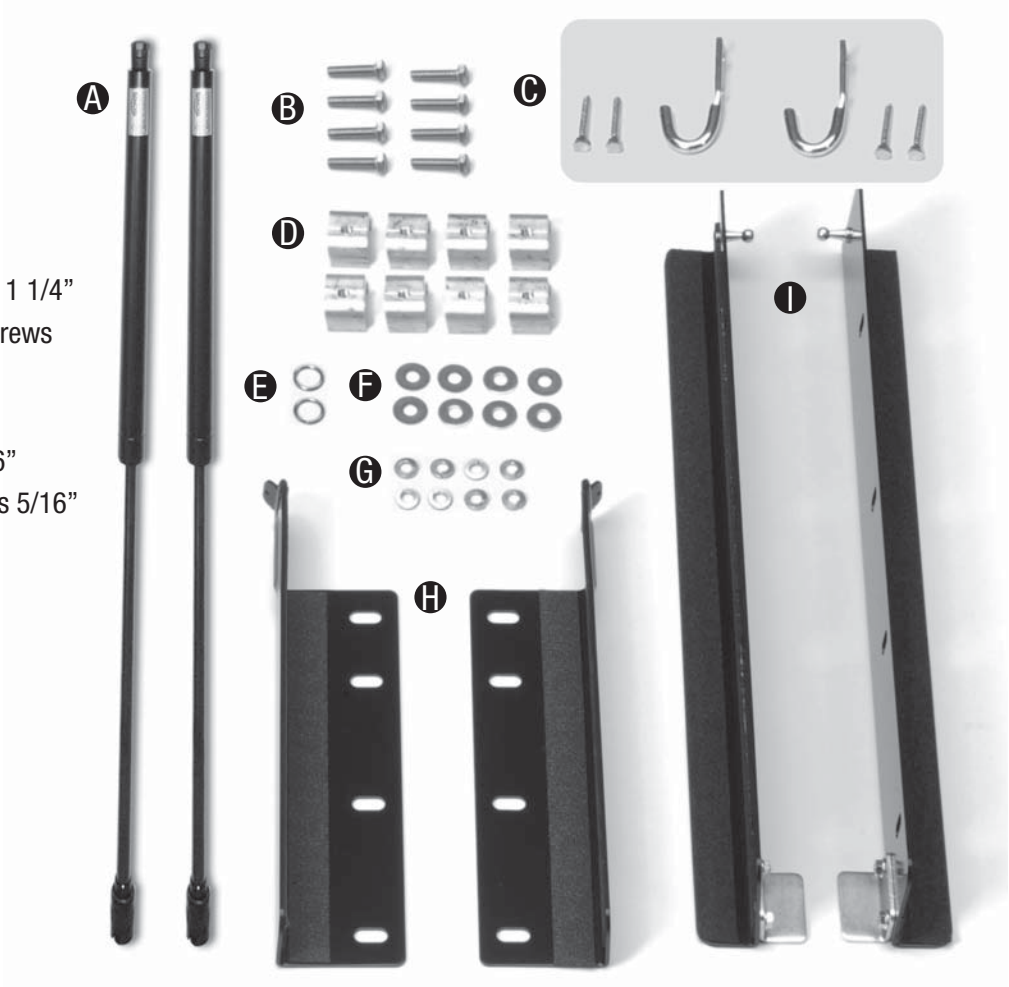

UNDERCOVER INSTALLATION TOOLS NEEDED



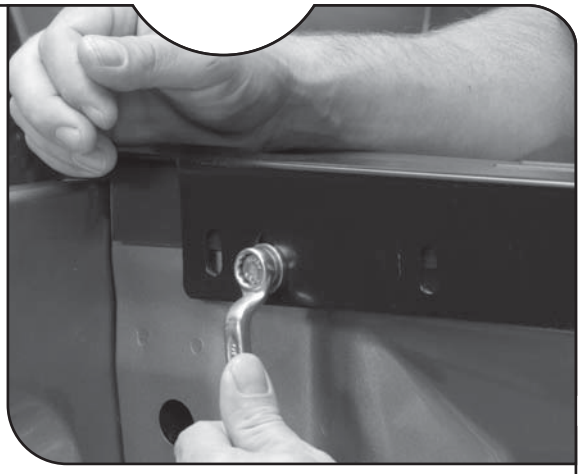



3/8”
WRENCH OR SOCKET

1/2”
WRENCH OR SOCKET

NORMAL INSTALLATION TIME 30 **MINUTES**

QUICK REMOVAL & REINSTALL REVIEW

Note: If your Tonneau has already been installed, skip to Page 9 for removal and reinstall instructions.

Off your truck and on your wall in less than one minute!



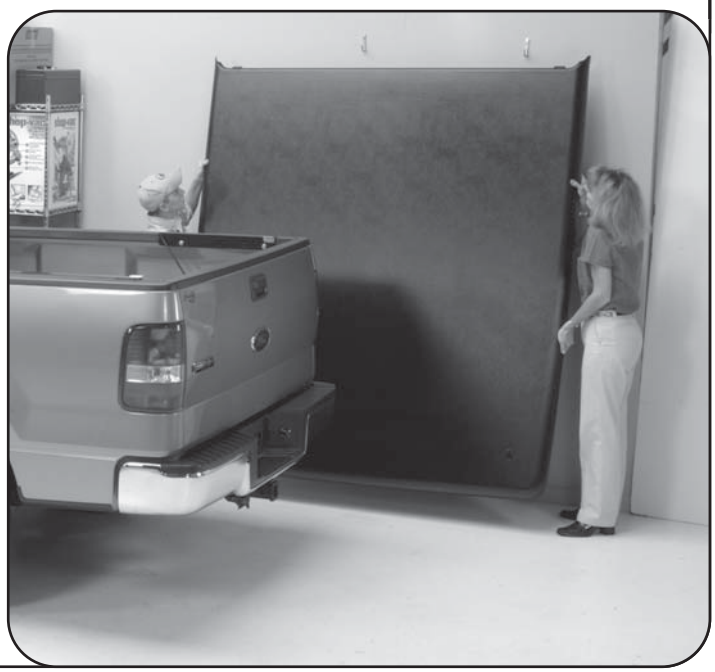

EASY AS 1-2-3

UNDERCOVER INSTALLATION INSTRUCTIONS



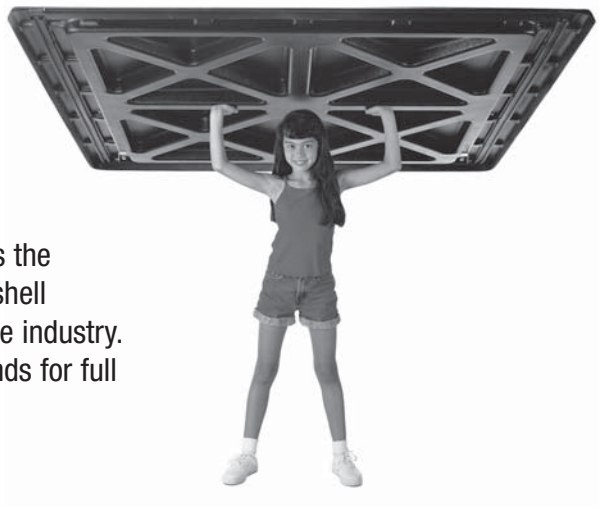

FACT:
Undercover is the lightest hardshell tonneau in the industry. Only 58-pounds for full size trucks.

A Place the rear bracket against the truck stake pocket or tail light well ***Page 4, Figure 1, Pictures A & B.***

B Use two of the holes in rear bracket which are unobstructed by the truck bed, (there will be three to choose from), one hole as far forward as possible and one hole as far back as possible (this will vary depending upon truck model) ***Page 4, Figure 2.***

C Place a 5/16 x 1 1/4 " bolt with a 5/16" lock washer and a 5/16" washer through the hole in bracket ***Page 4, Figure 3.*** Place clamp on backside of bracket behind the bed lip of the truck. Thread the bold into the clamp and tighten being careful to not let the clamp twist while tightening. Make sure bracket is held down tightly against truck bed rail before tightening. Repeat procedure for second clamp. Mounting bracket bolts must be tightened down without bending the bracket. Keep the clamps straight and do not let them turn while tightening ***Page 4, Figure 3, Picture C & D.***

WARNING! Bolts must be tightened to the correct torque to prevent any movement of the bracket on the truck bed. Bolts must be re-checked for tightness periodically. Failure to do so could cause serious damage to both the truck and/or your Undercover.

D Repeat Steps A through C for opposite side of the truck bed.

Footnote: Normal installation does not require the use of a torque wrench. But it is a good idea to compare how tight you are currently tightening the bolts with the tool you are using with a torque wrench just so you can get "the feel" of how tight 15-ft./lbs. or 180-in./lbs. of torque actually is.

UNDERCOVER INSTALLATION INSTRUCTIONS

10

Figure 1

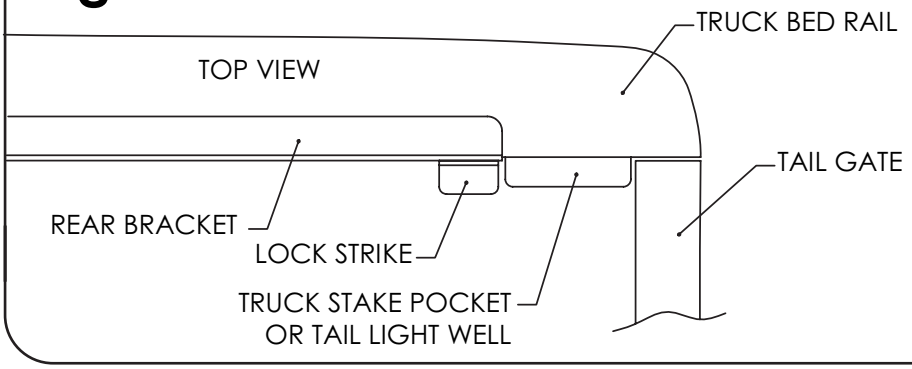

Figure 2

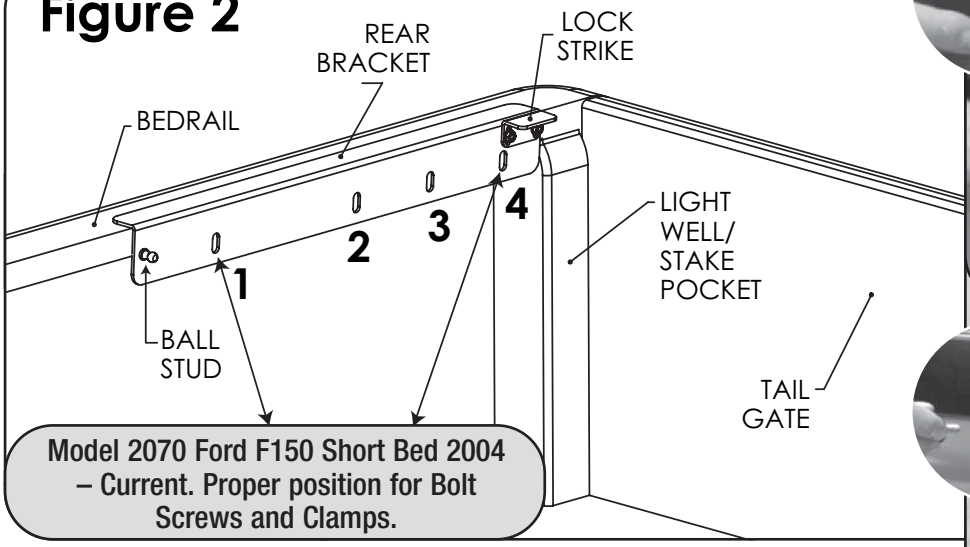

Model 2070 Ford F150 Short Bed 2004 – Current. Proper position for Bolt Screws and Clamps.

Figure 3

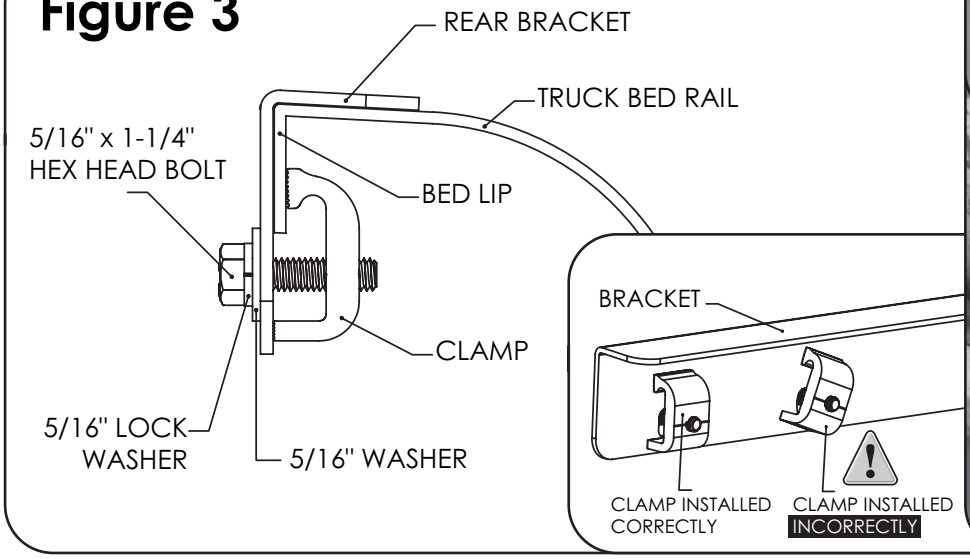

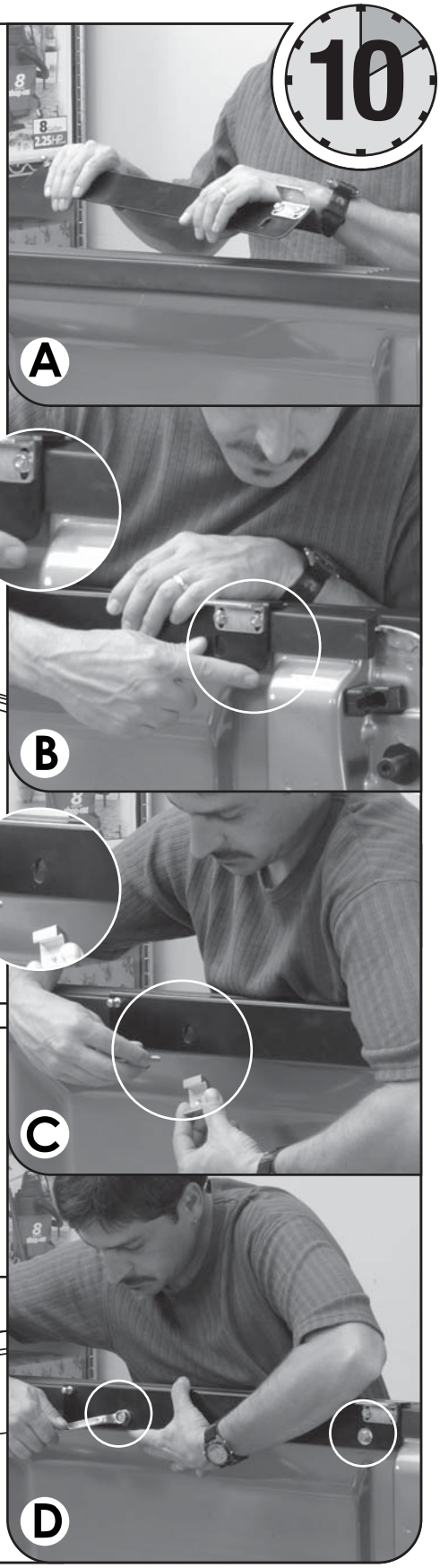

EASY AS 1-2-3

UNDERCOVER INSTALLATION INSTRUCTIONS



FACT: Undercover's ABS-Composite material makes it the strongest and most durable tonneau on the market.



A Position the front bracket according to ***Page 6, Figure 4, Picture A.*** It is very important to review ***Page 6, Figure 4*** for the proper gap distance to set the front brackets of your truck model.

WARNING: Truck beds may vary and could require adjustment to the front brackets which in turn could affect the gap distance between the bulkhead and the front bracket. The designated gap in ***Figure 4*** is a good starting point before adjustments may be necessary. Refer to Page 7, Step 3, Section C to make necessary adjustments.

B Using designated holes in ***Page 6, Figure 5,*** place a 5/16" x 1 1/4" bolt with a 5/16" lock washer and a 5/16" washer through the hole in bracket. Place clamp on backside of bracket behind the bed lip of the truck ***Page 6, Picture B.*** Thread the bolt into the clamp and tighten being careful to not let the clamp twist while tightening. Make sure bracket is held down tightly against truck bed rail before tightening. Repeat procedure for second clamp. Mounting bracket bolts must be tightened down without bending the bracket. Keep the clamps straight and do not let them turn while tightening. This procedure is the same as in Step 1 when assembling bolts and clamps on the rear brackets. See ***Page 6, Picture B & C.***

C Repeat Steps A & B for opposite side of the truck bed.

D Place tonneau on truck positioning female hinges on tonneau over tangs on front brackets and install spiral rings into holes in tangs on front brackets ***Page 6, Figure 6, Picture D.*** Two 1 1/4" round clear Mylar® decals are included to help prevent the spiral rings from rubbing the truck on models that fit close to the cab. ***BE SURE TO INSTALL SPIRAL RINGS BEFORE ATTACHING THE HYDRAULIC STRUTS IN STEP 3.***

UNDERCOVER INSTALLATION INSTRUCTIONS

20

Figure 4

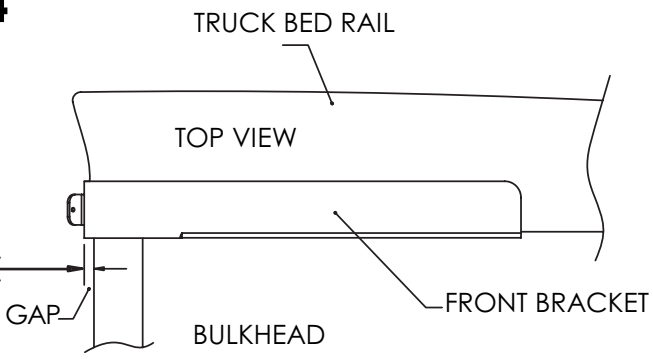

1/16"–Gap proper starting point for model 2070 Ford F150 Short Bed 2004 – Current

Figure 5

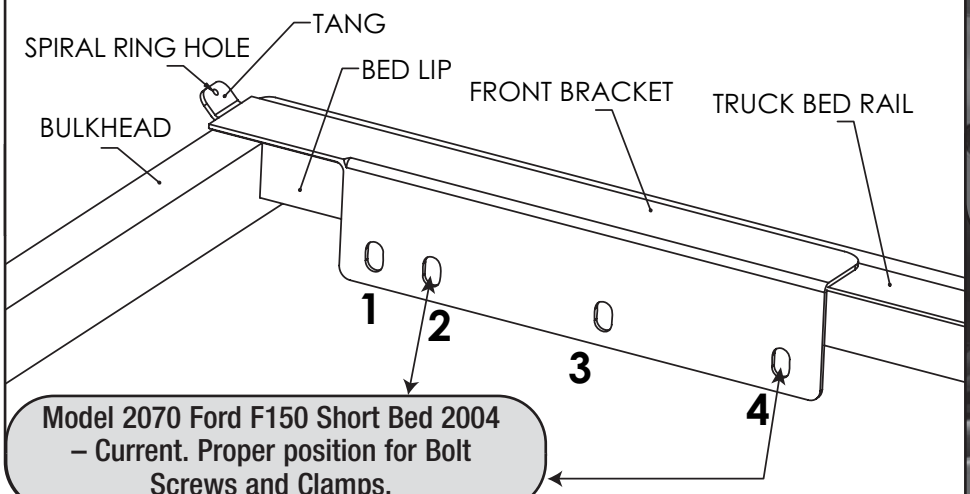

Model 2070 Ford F150 Short Bed 2004 – Current. Proper position for Bolt Screws and Clamps.

Figure 6

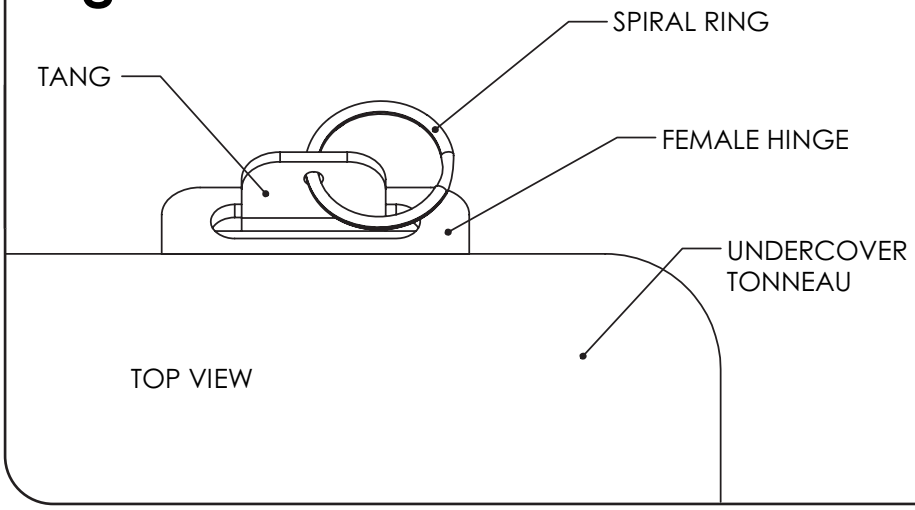

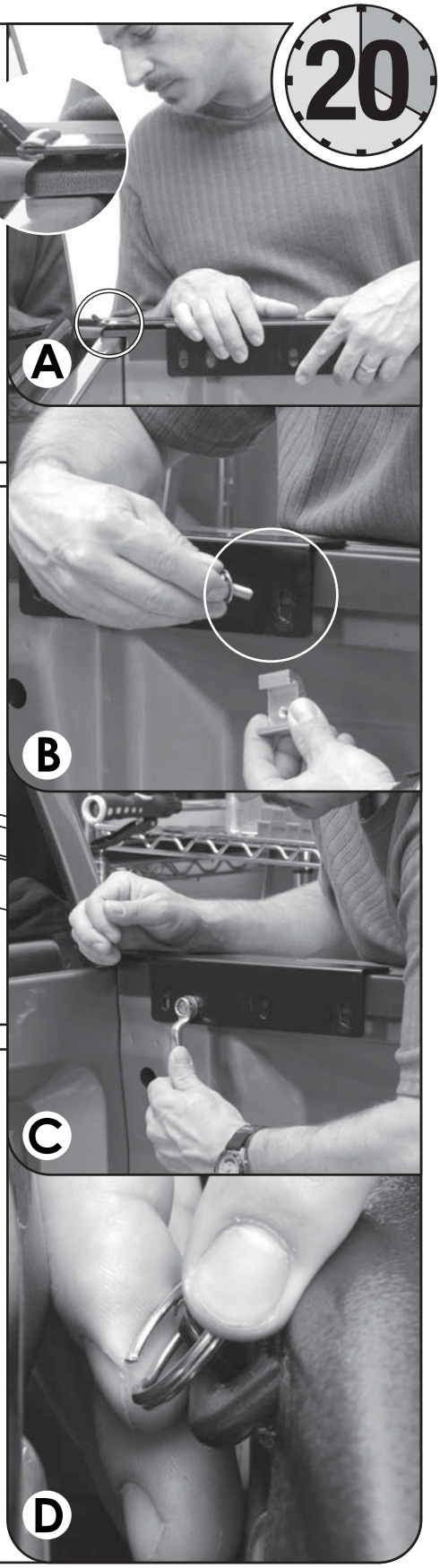

EASY AS 1-2-3

UNDERCOVER INSTALLATION INSTRUCTIONS



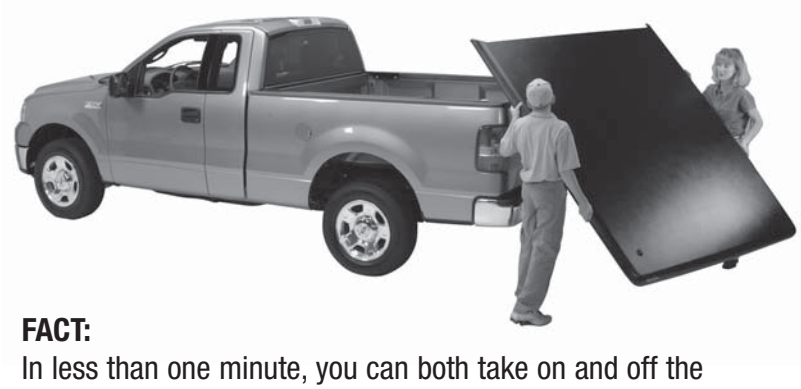

FACT:
In less than one minute, you can both take on and off the Undercover tonneau. Fastest removal system in the industry.

A Install hydraulic struts making sure LARGE end of strut is attached to the tonneau, and SMALL or rod end is attached to the ball stud on rear bracket ***Page 8, Figure 7, Picture A.***

B Be sure that the front flap seal hangs over the bulkhead of the truck and is not rolled under the tonneau after installation. If flap seal is rolled under the tonneau, open the tonneau and from the inside use a yardstick or something similar to push the flap seal out from under the tonneau and over the bulkhead ***Page 8, Figure 8, Picture B.***

C Close tonneau and check length on the truck. There should be 1/8" -to- 3/8" gap between the tailgate and the tonneau. If this is not correct, adjust by moving front brackets forward or back to achieve correct length. Front brackets may also have to be adjusted independently to "square-up" tonneau on some truck beds.

D Adjust lock strikes ***Page 8, Picture C***. When adjusted properly you should be able to turn the key to the locked position without having to push down on the tonneau. There should be a very slight amount of play between the lock cam and lock strike. A good rule of thumb is to adjust the lock to have approximately 1/8" gap between the cam and lock strike with the truck tailgate down. This usually gives you the proper adjustment after the tailgate is shut ***Page 8, Figure 9, Picture D.***

WARNING: It is very important to be able to turn the key without any resistance. Do not try to force the lock cam to turn if you encounter resistance. This could result in a broken key or broken lock. Adjustment may be necessary to the lock strike plate to achieve a smooth turn without any resistance.

UNDERCOVER INSTALLATION INSTRUCTIONS

30

Figure 7

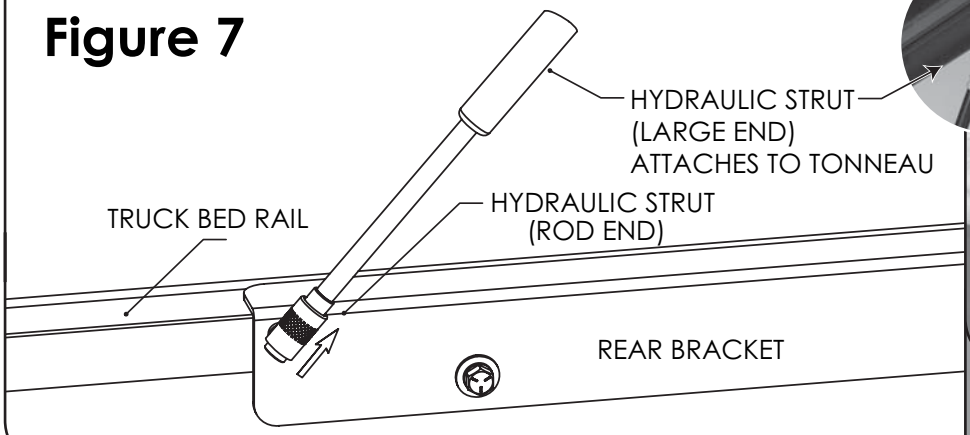

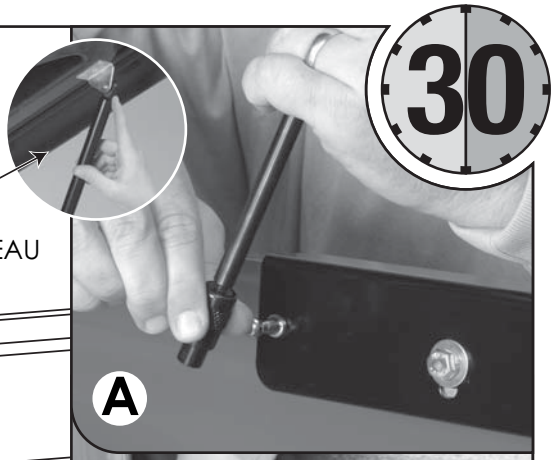

Figure 8

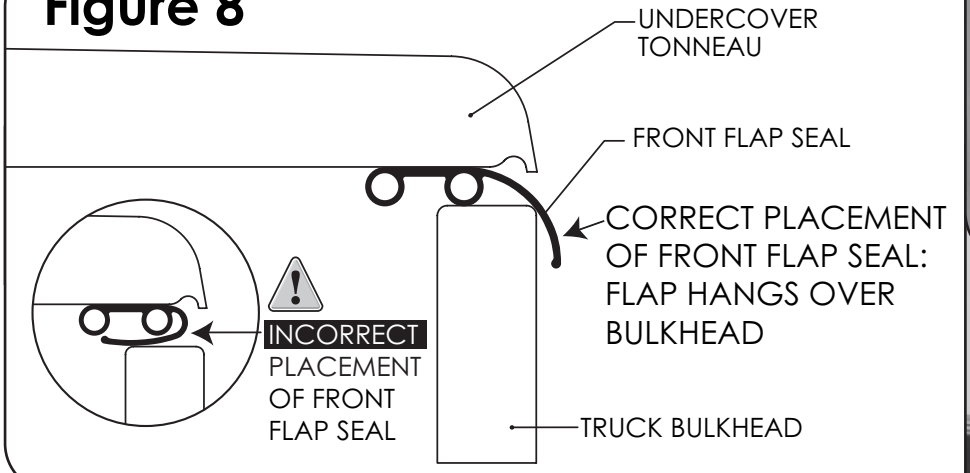



Figure 9

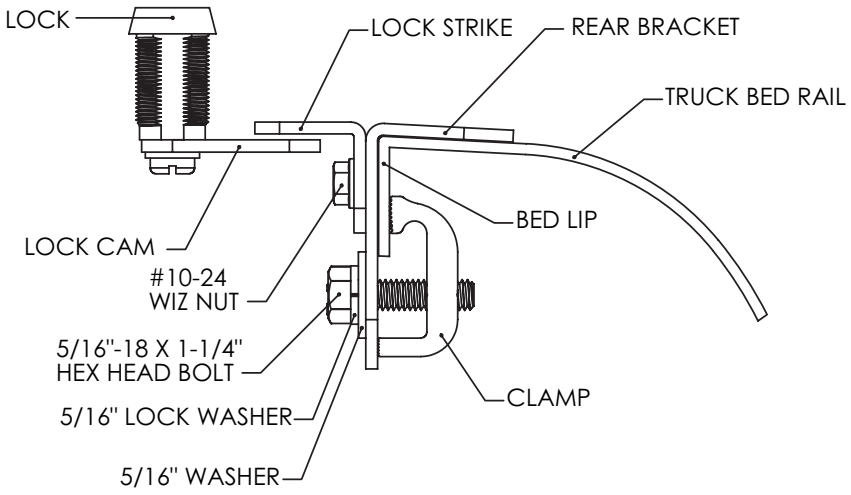

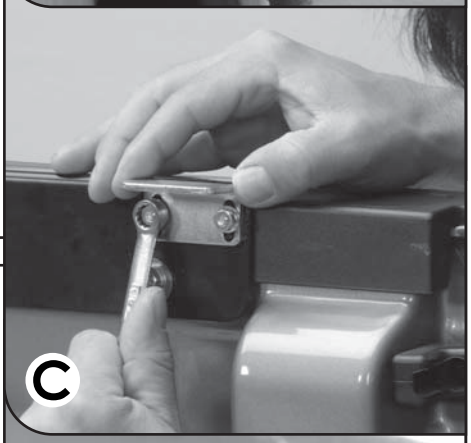

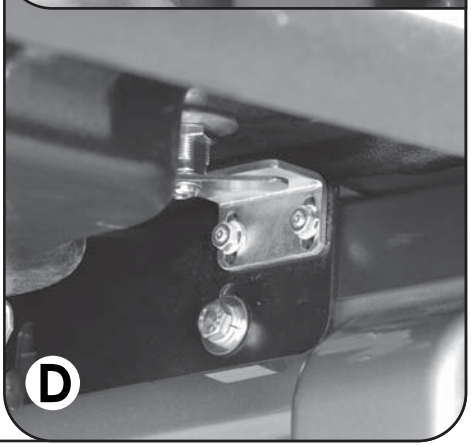

Congratulations!

Your 30-minute installation job is now complete. Now, in less than one minute, you will be able to put on and take off your tonneau cover.

UNDERCOVER REMOVAL & REINSTALLATION INSTRUCTIONS

1 Minute Removal

Step 1 Release strut off of ball stud. Holding tonneau up with one hand, place loose end of strut on storage clip. Repeat for the other side ***Picture A & B.***

Step 2 With cover closed, remove spiral rings at the front of the tonneau. BE SURE TO HAVE STEP 1 COMPLETED FIRST ***Picture C.***

Step 3 Now carefully remove the tonneau off of the truck bed ***Picture G.***


A

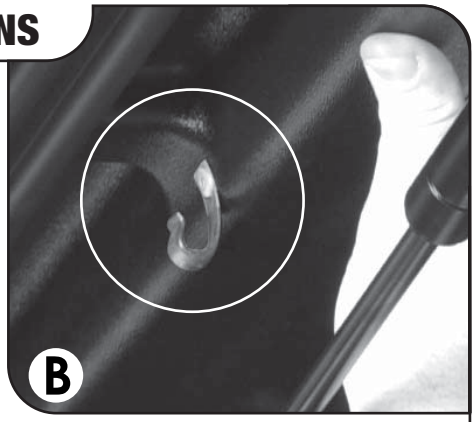
B


C

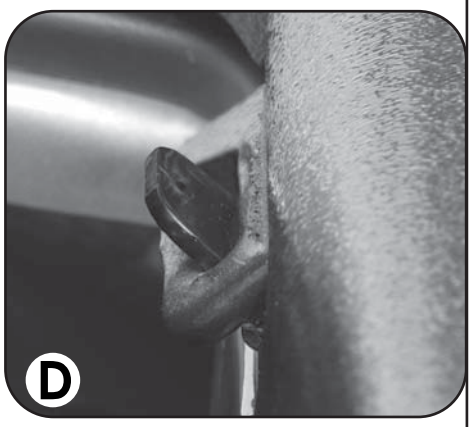
D

1 Minute Re-Install

Step 1 Place tonneau on the truck bed positioning hinges over front bracket tangs ***Picture D.***

Step 2 Install spiral rings on tangs to secure cover ***Picture C.*** Open tonneau with and attach strut to ball stud ***Picture A & B.***

Step 3 Be sure that the front flap seal is hanging over the bulkhead, not rolled under the tonneau after installation ***Picture E & F.***

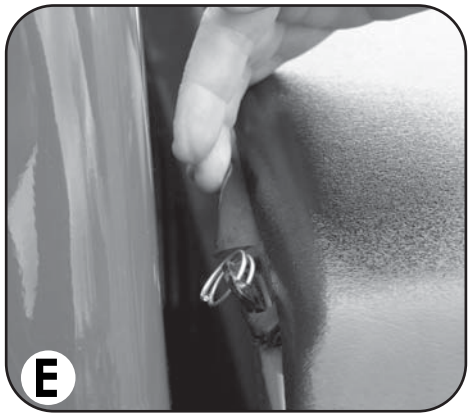
E

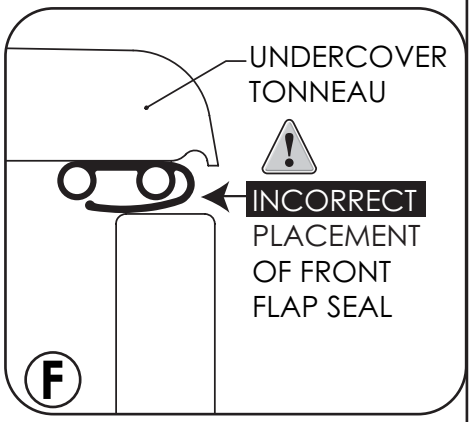

F


G

UNDERCOVER WALL HANGING INSTRUCTIONS

Step 1 Prior to removing the tonneau, mount the two J-Hooks provided on the garage wall. The hooks must have a minimum height from the floor of 70", and be 32" on center horizontally apart ***Picture A & B.***

Step 2 Remove your tonneau from the truck bed according to instructions on page 9, 1-Minute Removal.

Step 3 Hang tonneau vertically on the wall-mounted J-Hooks, with the underside against the wall inserting J-Hooks into the holes provided in ***Picture C.***

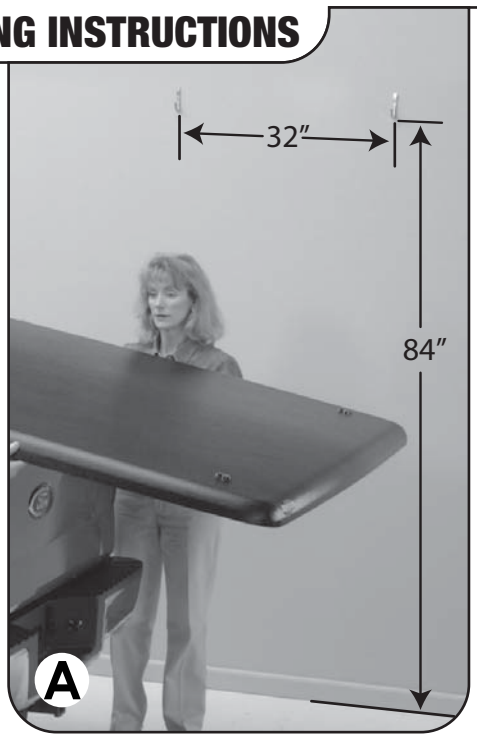

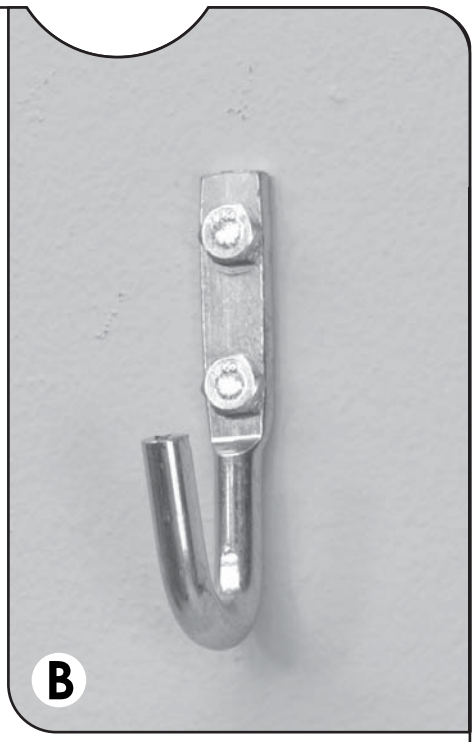

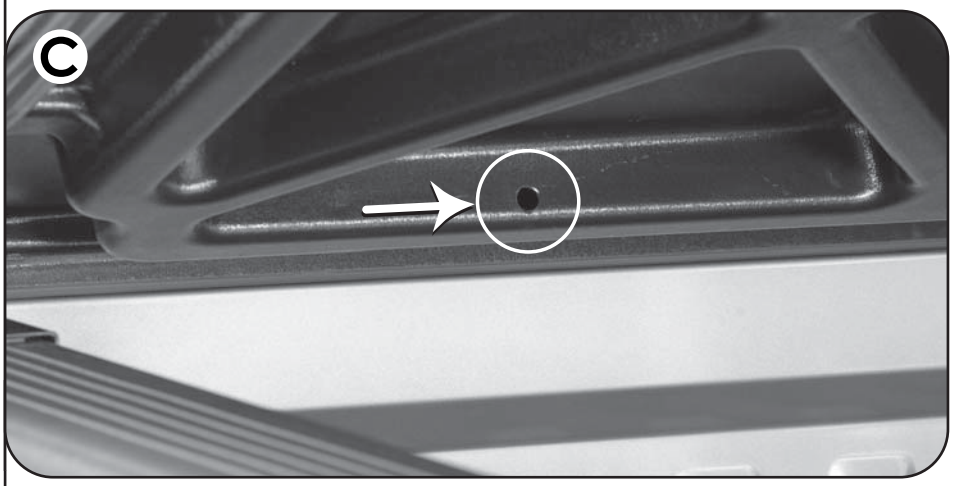

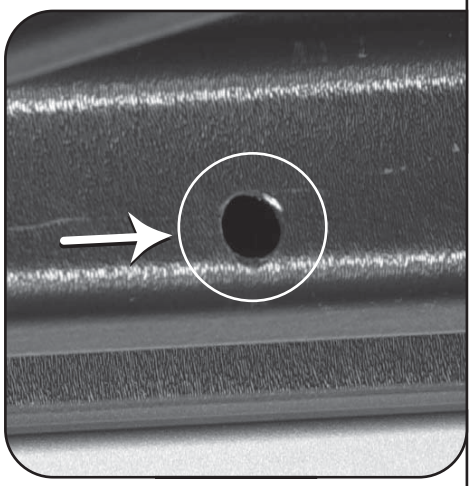



TONNEAU INSTALLATION GUIDE

UNDERCOVER SERIAL NUMBER LOCATION

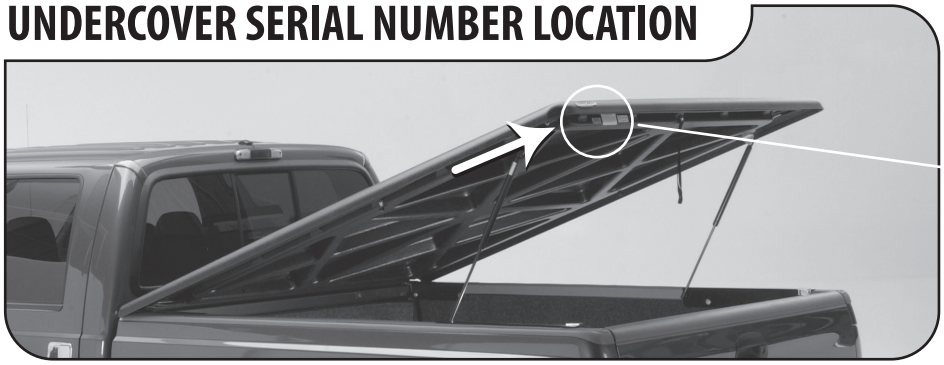



THANK YOU!



Congratulations! You've just installed the fastest-selling, highest-quality tonneau in the industry. Thank you very much for your purchase of UnderCover!

David Wells
President
UnderCover, Inc.

UnderCover, Inc.
P.O. Box 620
Rogersville, MO 65742
(417) 753-8000
(866) 900-8800
www.undercoverinfo.com
sales@undercoverinfo.com

For any Warranty issues, contact UnderCover directly.



© 2010 UnderCover, Inc.
All rights reserved.