FORGING MOUNT®

Instruction Manual

DUAL LONG ARM TV WALL MOUNT

For **42”- 90”**(107-228cm) TVs

Model:.HY9398-B

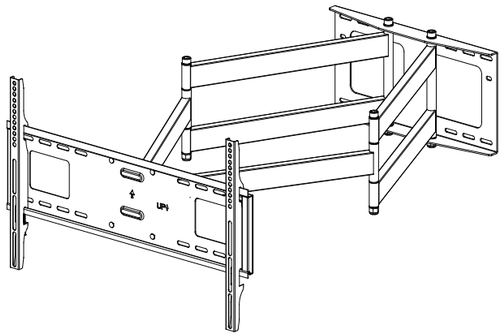

VESA 600X400mm(Max)

Getting Started

Does your TV (including accessories) weigth more than 132 lbs. (60 kg)?

No— Perfect!

Yes— This mount is NOT compatible.



⚠WARNING: Exceeding the weight capacity can result in serious personal injury or damage to equipment! It is the installers's responsibility to make sure the weight of the TV (with accessories) does not exceed 132 lbs (60 kg).

What is your wall made of?

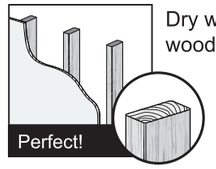

Dry wall with woodstuds?

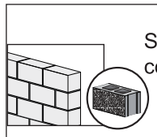

Solid concrete or concrete block?

Please read through these instructions completely to be sure you're comfortable with this easy install process. Also check your TV owner's manual to see if there are any special requirements for mounting your TV.

If you do not understand these instructions or have doubts about the safety of the installation, assembly or use of this product, please contact US via: forgingmount888@163.com

⚠ CAUTION: Avoid potential personal injuries and property damage!

- This product is designed for use in wood stud/concrete walls DO NOT install into drywall
- The wall must be capable of supporting five times the weight of the TV and mount combined
- Do not use this product for any purpose not explicitly specified by manufacturer
- Manufacturer is not responsible for damage or injury caused by incorrect assembly or use

Tools Needed

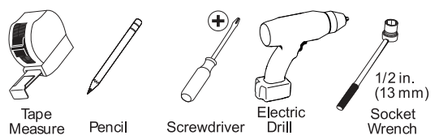

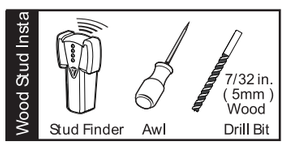

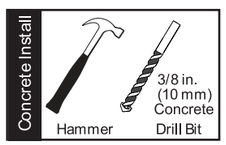

Hardware Included

⚠ WARNING: This product contains small items that could be a choking hazard if swallowed. Before starting assembly, verify all parts are included and undamaged. If any parts are missing or damaged, do not return the damaged item to your dealer; contact Customer Service.

Never use damaged parts!

NOTE:Not all parts and hardware included will be used.

Arm and Wall Plate

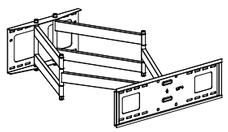

01 x1

TV Bracket



02 x2

wallplate template

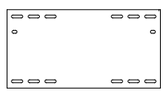

03 x1

Level



04 x1

VELCRO TIE



05 x6

HDMI Cable



06 x1

Lag Bolts

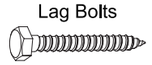

5/16x2.75”

A x6

Lag Bolt Washers



B x6

concrete anchor



C x6

TV Screws

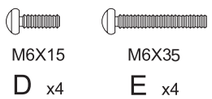

M6X15 D x4

M6X35 E x4

M8X15 F x4

M8X25 G x4

M8X35 H x4

M8X 50 I x4

TV Washers



J x4

Spacers



L5MM K x8

L10MM L x8

Allen key



M x1

Wrench



N x1

STEP1-1 Select TV Screw Diameter

Hand thread screws into the threaded inserts on the back of your TV to determine which screw diameter (M6, or M8) to use.



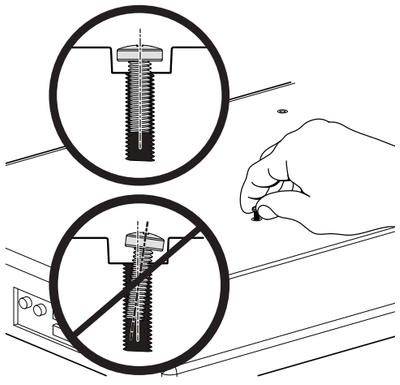

STEP1-2 Select TV Screw Length

If your TV has a flat back, AND you want your TV closer to the wall, use the shorter screws (A).

Use the spacers and longer screws(B) to accommodate:

- Round/irregular back TVs
- TVs with inset mounting holes
- Extra space needed for cables

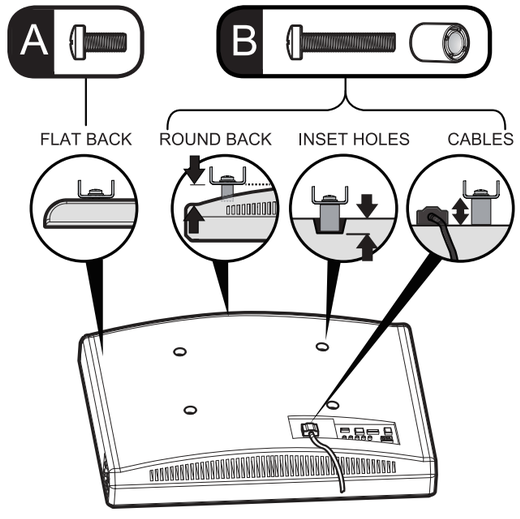

Standard configurations are shown. For special applications, or if you are uncertain about your hardware selection, you can contact at::
forgingmount888@163.com

⚠ CAUTION: Verify adequate thread engagement with the screw/ washer/spacer combination AND TV bracket.

- Too short will not hold the TV.
- Too long will damage the TV.

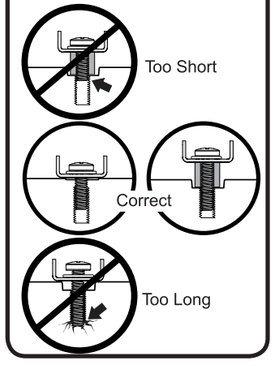

SpeciFication Sheet

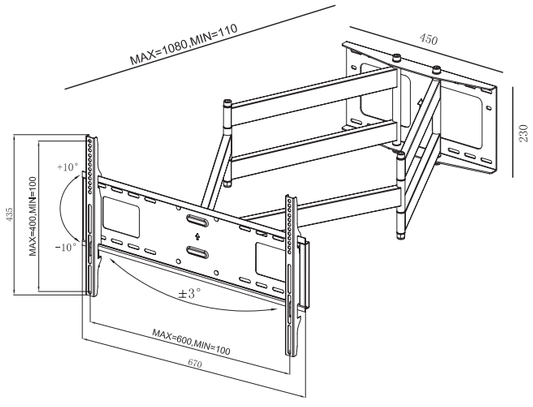

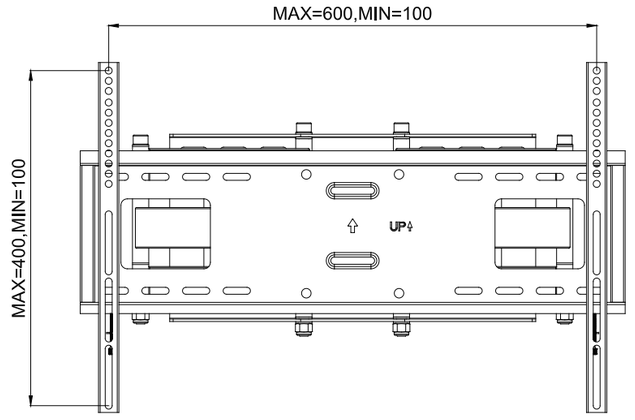

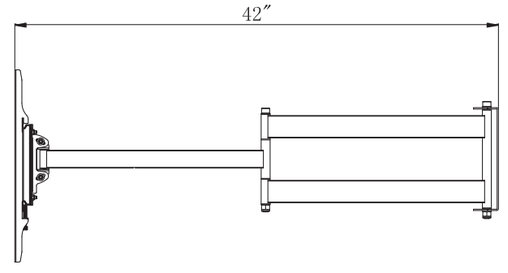

STEP 2 Wall Plate Install(Wood Stud)

⚠CAUTION: Avoid potential personal injuries and property damage!

- Drywall covering the wall must not exceed 5/8 in. (16 mm)
- Minimum wood stud size: common 2 x 4 in. (51 x 102 mm) nominal 1 x 3½ in. (38 x 89 mm)

⚠CAUTION: Avoid potential personal injury or property damage! All lag bolts (A) MUST BE firmly tightened to prevent unwanted movement of the wall plate 01 .

⚠CAUTION: Ensure the wall plate is securely fastened to the wall before continuing on to the next step.

2-1

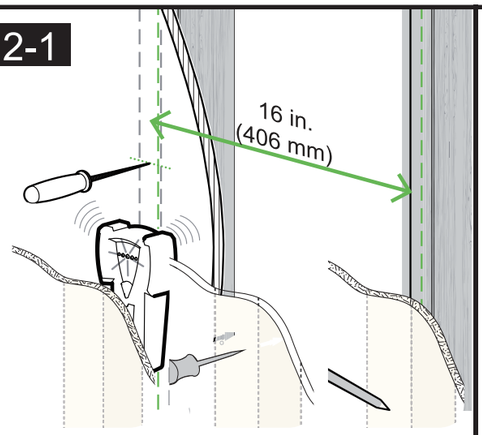

Locate your studs. Verify and mark the center of the studs by finding the stud edges using an awl, a thin nail, or an edge-to-edge stud finder.

2-2

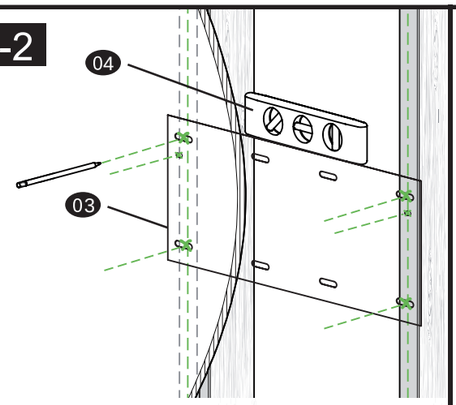

Position the template 03 at your desired height and line up the holes with your stud center line. Level the wall plate and mark the holes.

2-3

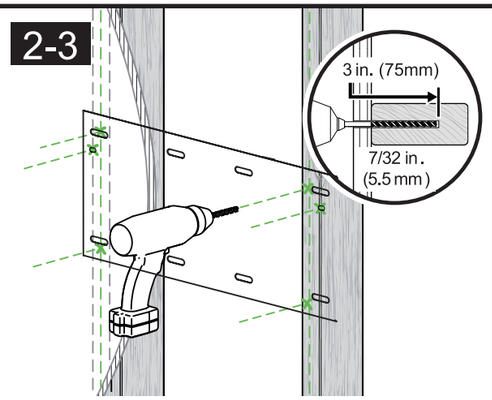

Drill pilot holes using a 7/32 in (5.5mm) diameter drill bit.

❗IMPORTANT Pilot holes must be drilled to a depth of 3 in.(75 mm).Be sure to drill into the center of the stud.

2-4

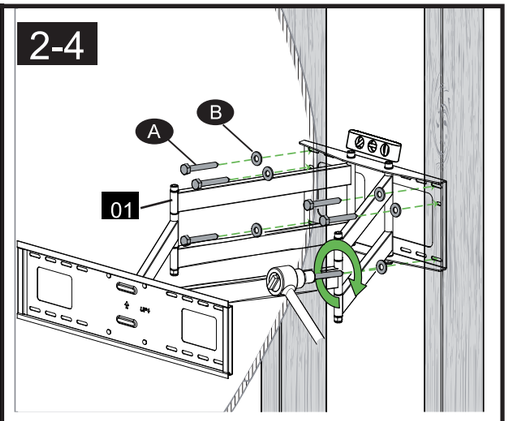

Install wall plate 01 using lag bolt (A) and washers (B) .Tighten the lag bolts only until they are pulled firmly a gainst the wall plate 01

STEP 3 Wall Plate Install(Solid Concrete or Concrete Block)

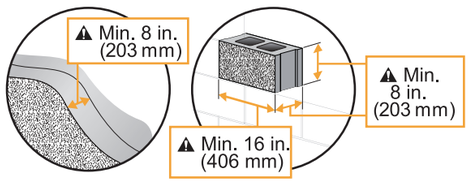

⚠ CAUTION: Avoid potential personal injuries and property damage!

- Minimum solid concrete thickness:8 in.(203mm)
- Minimum concrete block size: 8 x 8 x 16in.(203x203x406mm)
- Minimum horizontal space between fasteners:16in(406mm).
- Mount wall plate 01 directly onto the concrete surface.

3-1

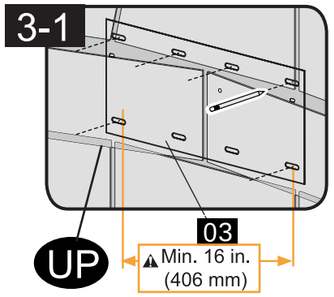

Position template 03 at your desired height. Level, then mark the six hole locations.

3-2

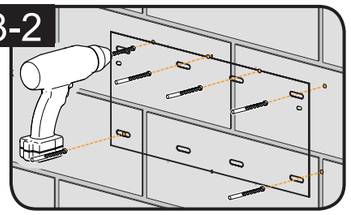

Drill six pilot holes using a 3/8 in. (10 mm) masonry drill bit.

❗IMPORTANT:Pilot holes must be drilled to a depth of 3 in (75 mm). Never drill into the mortar between blocks.

ever drill into the mortar between blocks.

3-3

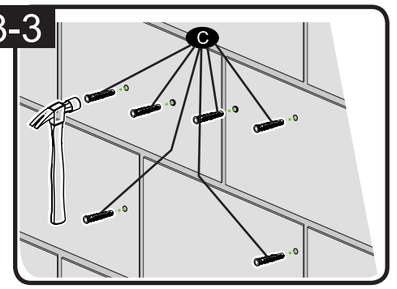

Insert six concrete anchors (C) (10x60mm) to the wall

CAUTION: Be sure the anchors are seated flush with the concrete surface.

3-4

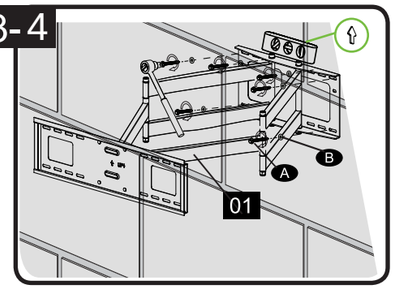

Install wall plate 01 with six washers (B) and screws (A)

⚠CAUTION: Improper use could reduce the holding power of screws (A)

DO NOT over-tighten the screws.

STEP 4 Attach TV Brackets to TV back

⚠ CAUTION: Avoid potential personal injuries and property damage!
DO NOT use a power screwdriver for this step

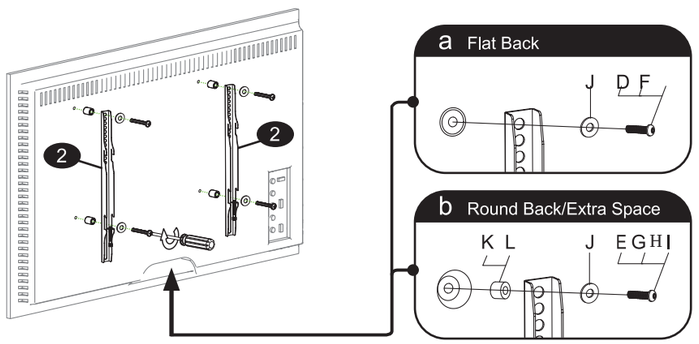

❗IMPORTANT:Ensure TV bracket is securely fastened before moving on to the next step.

STEP 5 Attach TV to the arm assembly

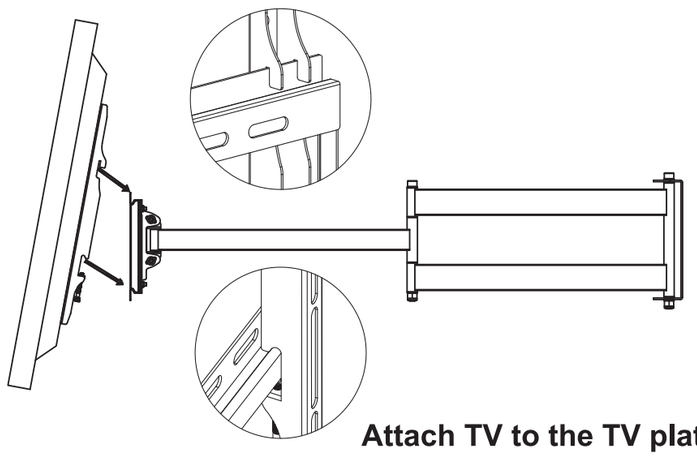

Attach TV to the TV plate

STEP 6 Tighting locking screws and cable management

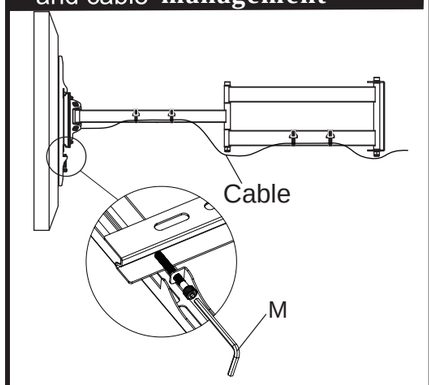

⚠ CAUTION: Avoid potential personal injury or property damage!

Make sure your locking screws are tightened BEHIND the mounting plate so the TV is securely fastened in place.

STEP 7 Tilt and level adjustment

Loosen the nut with a wrench (N) to adjust the appropriate tilt /level Angle and tighten the nut

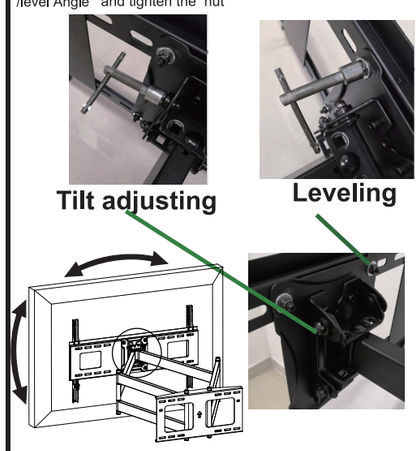

Made in China.