USER MANUAL

Superior 6000S
Smart Evaporative Humidifier

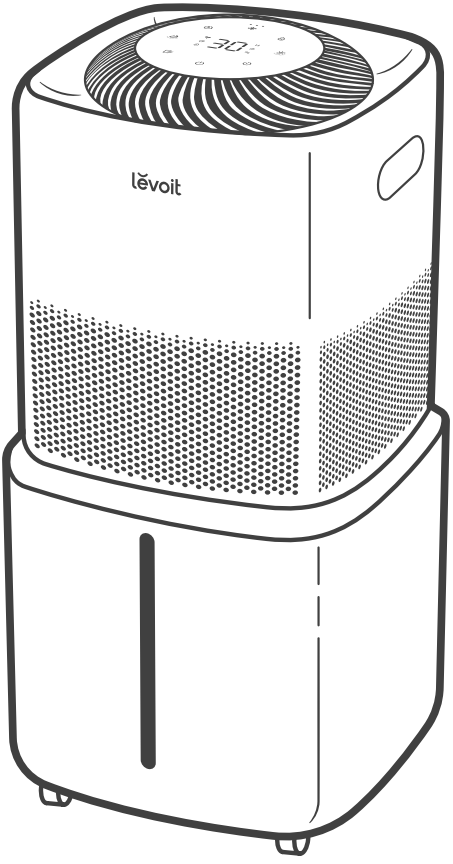

Questions or Concerns?

Please contact us Mon–Fri, 9:00 am–5:00 pm PST/PDT
at **support@levoit.com** or at **1-888-726-8520.**

Table of Contents

Package Contents	**2**
Specifications	**3**
Safety Information	**4**
Getting to Know Your Smart Humidifier	**6**
Controls & Display	**8**
Getting Started	**10**
Filling & Refilling	**11**
Using Your Smart Humidifier	**13**
Care & Maintenance	**17**
Troubleshooting	**21**
Limited Warranty Information	**25**
Customer Support	**27**

Package Contents

1 x Smart Evaporative Humidifier
4 x Wick Filter (Pre-Installed)
1 x Power Adapter
1 x Cleaning Brush
1 x Long straw brush
1 x Water Pump Filter Pad
1 x Water Pump
1 x Water Filling Hose
1 x Storage Bag
1 x User Manual
1 x Quick Start Guide

Specifications

Model	LEH-S602S-WUS
Power Supply	24V⎓ 1.5A
Rated Power	26W
Water Tank Capacity	6 gal / 22.7 L
Max Mist Output	1,500 mL/h
Max Runtime	72 hours on low fan speed setting **Note:** *The humidifier may run for a longer or shorter time depending on the environmental temperature and humidity.*
Noise Level*	28–48dB **Noise test conditions: 1.5 m away from humidifier*
Effective Range	3,000 ft^2 / 279 m^2
Dimensions	12.7 x 12.7 x 26.8 in / 32.3 x 32.3 x 68.1 cm
Weight	13.2 lb / 6 kg
Power Adapter	Input: 100–240V 50/60Hz 1.0A Max Output: 24V⎓ 1.5A

Note: *To access additional smart functions, download the VeSync app (see page 12).*

READ AND SAVE THESE INSTRUCTIONS

SAFETY INFORMATION

To reduce the risk of fire, electric shock, or other injury, follow all instructions and safety guidelines.

General Safety

- **Only** use your humidifier as described in this manual.
- **Do not** use without removing the plastic wrap from the wick filters. The humidifier will not filter water and may overheat, causing a fire hazard.
- **Do not** use your humidifier outdoors.
- Keep your humidifier away from water, and wet or damp areas. **Never** place in water or liquid.
- **Do not** use in excessively humid areas.
- Keep your humidifier away from heat sources.
- **Do not** use where combustible gases, vapors, metallic dust, aerosol (spray) products, or fumes from industrial oil are present.
- Keep 5 ft / 1.5 m away from where oxygen is being administered.
- Children should be supervised to ensure that they **do not** play with the humidifier.
- **Do not** allow children to play with the plastic packaging. Immediately discard the plastic after unwrapping the wick filters.
- **Do not** place anything into any opening on the humidifier.
- Children should be supervised to ensure they **do not** insert fingers or objects into the vent openings.
- **Do not** sit or place heavy objects on the humidifier.
- **Do not** add essential oils, supplemental water treatment liquids, or water filters into the water tank. This will damage the humidifier and cause leaks.
- **Always** unplug your humidifier before servicing (such as changing the filter).
- **Do not** use your humidifier if it is damaged or not working correctly, or if the cord or plug is damaged. **Do not** try to repair it yourself. Contact **Customer Support** (see page 27).
- **WARNING:** To reduce the risk of fire or electric shock, **do not** use this humidifier with any solid-state speed controls (such as a dimmer switch).
- Children should not clean or perform maintenance on the humidifier without supervision.
- This humidifier is not to be used by persons (including children) with reduced physical, sensory, or mental capacities, or lack of experience and knowledge, unless they have been given supervision or instruction concerning the use of the appliance by a person responsible for their safety.
- Not for commercial use. Household use **only**.

Safety Information (cont.)

Power Adapter & Cord

- Keep the humidifier near the outlet it is plugged into.
- Your humidifier's adapter has a polarized plug (one prong is wider than the other), which fits into a polarized outlet only one way. This is a safety feature to reduce the risk of electric shock. If the plug does not fit, reverse the plug. If it still does not fit, **do not** use the plug in that outlet. **Do not** bypass this safety feature.
- **Never** place the adapter near any heat source.
- **Do not** handle the power adapter or plug with wet hands. Keep the plug and power adapter away from liquids.
- **Do not** cover the cord with a rug, carpet, or other covering. **Do not** place the cord under furniture or appliances.
- Keep the cord out of areas where people walk often. Place the cord where it will not be tripped over.
- This humidifier is **only** to be used with the power supply adapter provided with the humidifier.
- If the power adapter is damaged, it must be replaced by Arovast Corporation or similarly qualified persons in order to avoid an electric or fire hazard. Please contact **Customer Support** (see page 27).
- This humidifier's power adapter uses standard North American **120V, 60Hz** outlets. If using outside the US or Canada, check for compatibility.
- Unplugging the power adapter will temporarily disconnect the humidifier from VeSync and other third-party apps.

SAVE THESE INSTRUCTIONS

GETTING TO KNOW YOUR SMART HUMIDIFIER

A. Display
B. Air Outlet
C. Wick Filter Frame
D. Humidity Sensor
E. Support Frame
F. Humidifier Top
G. Water Pump
H. Water Tank
I. Water Level Window
J. Wheels
K. Handles
L. Alignment Sensor
M. Power Adapter Input
N. Support Frame Inlet
O. Air Inlet
P. Wick Filters
Q. Water Filling Hose
R. Cleaning Brush
S. Power Adapter
T. Long straw brush
U. Water Pump Filter Pad

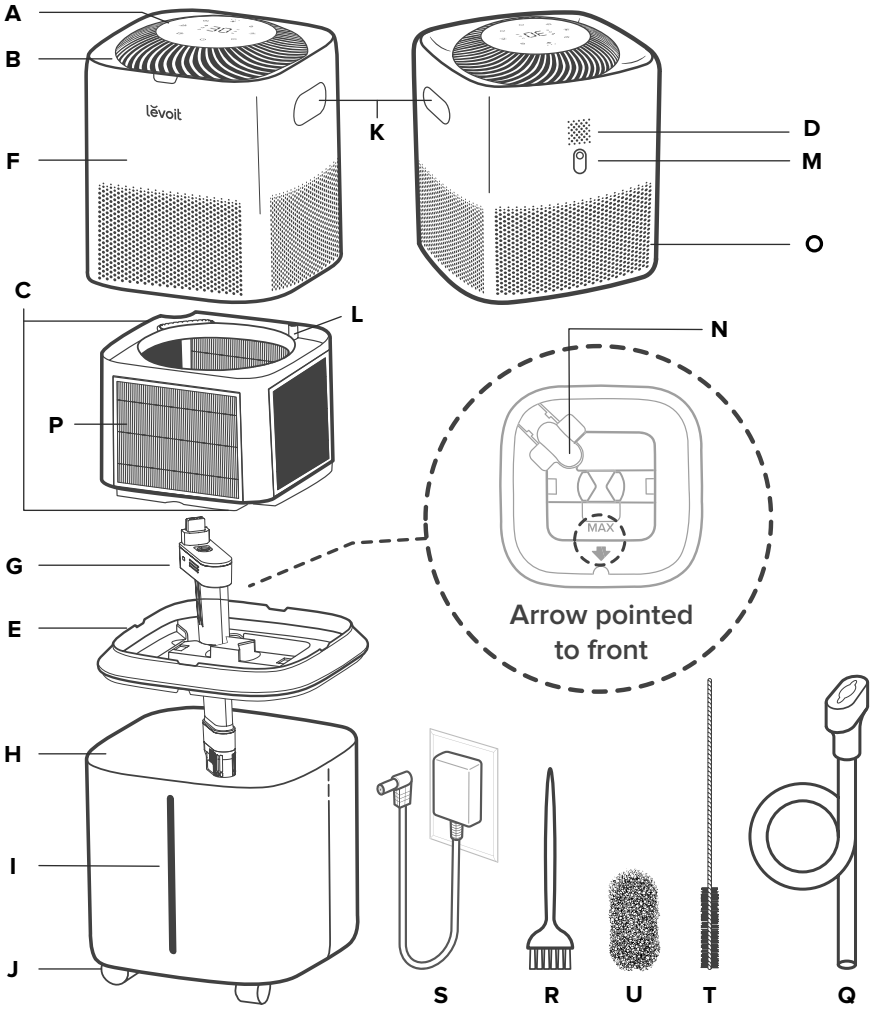

CONTROL PANEL

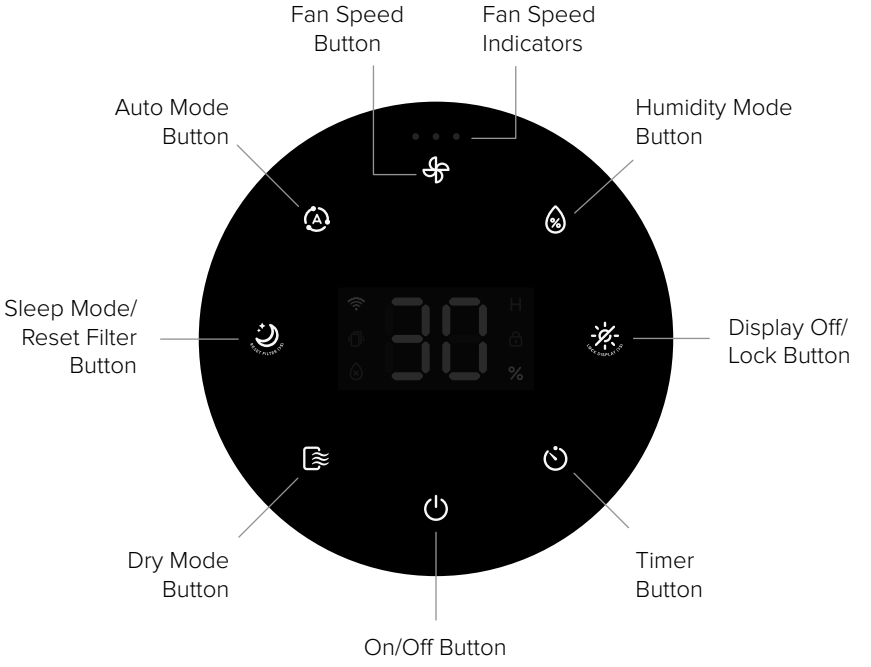

DISPLAY

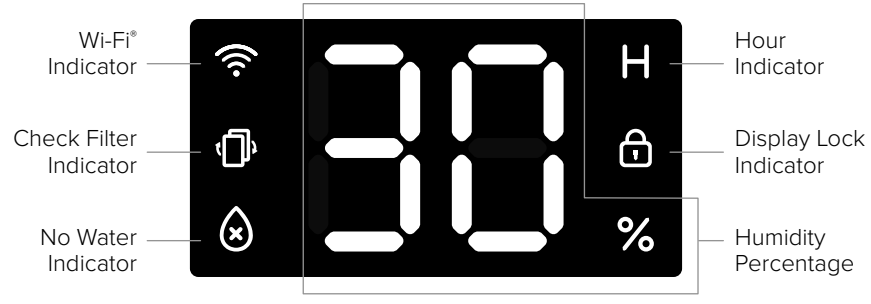

Fan Speed Indicators



CONTROLS & DISPLAY

Note: *You can also use the VeSync app to control these functions, as well as additional app-only features (see **VeSync App Functions**, page 15).*

On/Off Button

- Tap to turn the humidifier on/off.
- Press and hold for 5 seconds to pair with the VeSync app. See the in-app instructions for more information.
- Press and hold for 15 seconds to reset the humidifier. This will restore the humidifier's default settings and disconnect it from Wi-Fi® and the VeSync app (see page 12).
- The operating temperature range of the product is 10°C–35°C (50°F–95°F).

Timer Button

- Tap to set a timer for 1–12 hours.
- Press and hold for 2 seconds to begin cycling through the timer options in 1-hour increments.
- After a timer is set, the display will flash 3 times, then show a countdown until the timer is finished.
- To turn a timer off before it is finished, tap until the display shows "– –" or tap to turn the humidifier off.

Display Off Button

- Tap to turn the display off.
- Tap any button (except) to turn the display on. If no other button is pressed after 6 seconds, the display will automatically turn off again.

Display Lock Button

- Press and hold for 3 seconds to turn Display Lock on. will show on the display.
- will flash 3 times when any other button is tapped to indicate that Display Lock is on.
- Press and hold for 3 seconds to turn Display Lock off.
- You can also turn the Display Lock on/off in the VeSync app.

Humidity Mode Button

- Tap to set a target humidity level from 30–80%.
- Continue tapping to cycle through target humidity options in increments of 5%.
- You can also change the target humidity level in the VeSync app (see page 14).
- Recommended humidity range: 40%–60%.

Fan Speed Button

- Tap repeatedly to cycle through fan speed settings: low, medium, and high.

Auto Mode Button

- Tap to turn Auto Mode on (see page 13).
- Tap , , or to exit Auto Mode and resume manual controls, or tap for Sleep Mode.
- You can also turn Auto Mode on/off in the VeSync app.

Controls & Display (cont.)



Sleep Mode/Reset Filter Button

- Tap to turn Sleep Mode on (see page 14).
- Tap , , or to turn Sleep Mode off.
- Press and hold for 3 seconds to reset the Check Filter Indicator.
- You can also reset the Check Filter Indicator or turn Sleep Mode on/off in the VeSync app.



Dry Mode Button

- Tap repeatedly to cycle through Dry Mode settings: low, high, and off (see page 14).
- You can also turn Dry Mode on/off in the VeSync app.



Wi-Fi Indicator

- Turns on, off, or blinks to indicate pairing status. See the VeSync in-app instructions for more information.



Check Filter Indicator

- Turns on when the wick filters should be checked (see **Replacing the Wick Filters**, page 17).



No Water Indicator

- Blinks when there is no water in the tank. After this indicator blinks for 10 seconds, the humidifier will turn off. Remove the humidifier top to refill the water tank (see **Filling & Refilling**, page 11).
- Lights up when the humidifier top is removed. Remains on until the humidifier top is replaced.



Hour Indicator

- Turns on when a timer is set.



Display Lock Indicator

- Turns on when the display is locked.
- Flashes 3 times when any other button is tapped to indicate that Display Lock is on.



Humidity Percentage

- When a target humidity is selected, the display will show the target humidity. After 3 seconds of no operation, the target humidity will flash 3 times, then show the current humidity.

GETTING STARTED

1. Remove all parts from the packaging.

   A. Water Tank
   B. Support Frame
   C. Water Pump
   D. Wick Filter Frame
   E. Humidifier Top

2. Clean the water tank before first use.
3. Place the support frame on top of the water tank. ***[Figure 1.1]***

   Note: *The arrow on the support frame must point to the water level window on the front of the humidifier.*

4. Insert the water pump into the inlet of the support frame. ***[Figure 1.2]***
5. Place the wick filter frame on top of the support frame.
6. Place the humidifier top on the water tank, aligning the Levoit logo with the water level window. ***[Figure 1.3]***

   Note: *The alignment sensor on the wick filter frame will detect if the humidifier top is placed correctly.*

7. Choose a hard, flat location for the humidifier at least 12 in / 30 cm away from any walls. The surface must be water-resistant. ***[Figure 1.4]***

   Note: *Placing the humidifier away from walls ensures that the humidity sensor and air inlets function properly.*

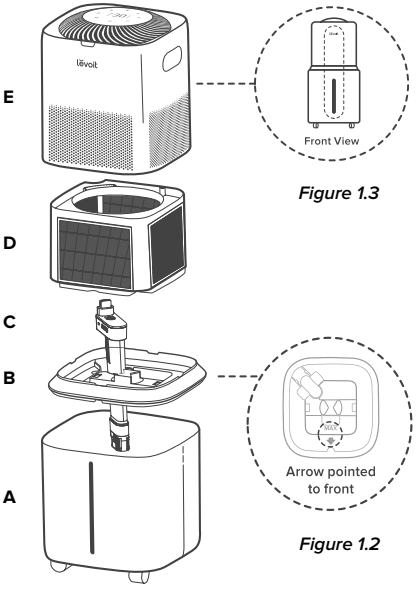

Figure 1.3

Figure 1.2

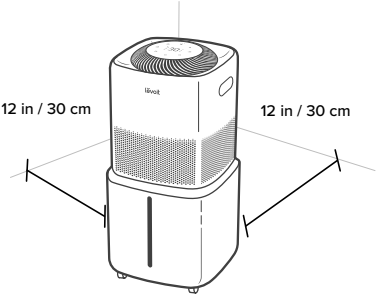

Figure 1.4

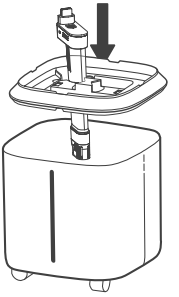

Figure 1.1

FILLING & REFILLING

Note:

- *Make sure the water tank is clean before filling.*
- ***Pour out any remaining water left in the tank before refilling**. If not emptied regularly, impurities may accumulate in the water and affect the lifespan of the device.*

CAUTION

- ***Do not** add water through the top of the humidifier. **[Figure 2.5]***
- ***Do not** add essential oils into the humidifier.*
- ***Do not** use water treatment liquids or third-party water filters in this humidifier.*

1. Roll or carefully lift the humidifier to a kitchen or bathroom sink. Be careful if you are rolling the wheels on carpet.
2. Remove the humidifier top. ***[Figure 2.1]***
3. Place one end of the water filling hose into the support frame inlet and place the funnel underneath the faucet. ***[Figure 2.2]***
4. Optionally, you can remove the support frame and add water directly into the water tank. ***[Figure 2.2]***

   Note: *Do not fill with hot water.*

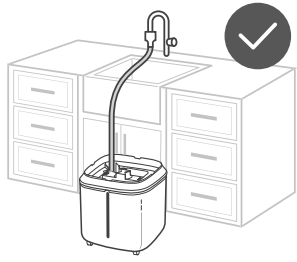

Figure 2.2

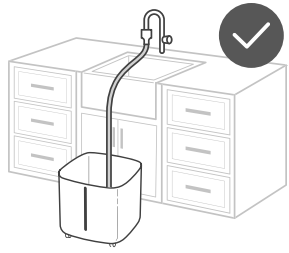

5. Use the water level window to see how much water is in the tank. **Do not fill** past the max line or water may overflow. ***[Figure 2.3]***
6. Replace the support frame (if it was removed) and humidifier top. ***[Figure 2.4]***

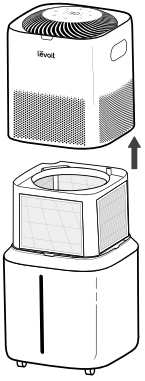

Figure 2.1

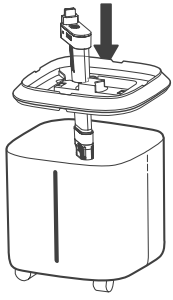

Figure 2.4

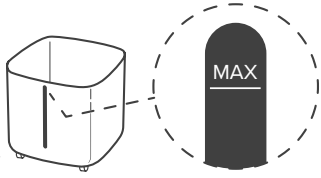

Figure 2.3

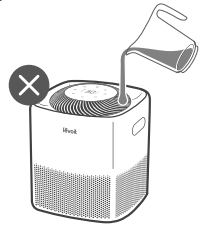

Figure 2.5

VeSync App Setup

Note: *Due to ongoing updates and improvements, the VeSync app may be slightly different than shown in the manual. In case of any differences, follow the in-app instructions.*

1. To download the VeSync app, scan the QR code or search "VeSync"in the Apple App Store® or Google Play Store. ***[Figure 1.1]***



Figure 1.1

Note:

- *For Android™ users, choose "Allow" to use VeSync.*
- *Requires device to run app, Wi-Fi or mobile data, and iOS version 12 or Android version 6 (or above). Standard data and messaging rates may apply. Registration is required.*

2. Open the VeSync app. **Log In** or **Sign Up.**

Note: *You must create your own VeSync account to use third-party services and products. These will not work with a guest account. With a VeSync account, you can also allow your family and friends to control your smart humidifier.*

3. Follow the in-app instructions to set up your smart humidifier.

Note:

- *You can use the VeSync app to connect your smart humidifier to Amazon Alexa or Google Assistant™. Follow the in-app instructions to connect VeSync to your voice assistant.*
- *Your phone must have Location turned on while your phone is connecting to your smart humidifier. This is required to establish the Bluetooth® connection. You can turn Location off after your smart humidifier is finished connecting to the VeSync app.*

Wi-Fi Connection

- To disconnect Wi-Fi, press and hold ⏻ for 15 seconds until the Wi-Fi indicator turns off. This will restore the smart humidifier's default settings and disconnect it from the VeSync app.
- To reconnect, please follow the instructions in the VeSync app for adding a device.

USING YOUR SMART HUMIDIFIER

Note: *Using the VeSync app allows you to control your smart humidifier remotely and access additional functions and features (see page 15).*

1. Plug in the humidifier. The indicators on the display will light up for 1 second, then turn off.
2. Tap ⏻ to turn your humidifier on. The humidifier will start evaporating water.

   Note:

   - *This humidifier uses evaporative technology, so the water vapor is invisible.*
   - *If there is no water in the tank, will flash 10 seconds, and the humidifier will turn off. Fill the water tank (see **Filling & Refilling**, page 11).*
   - *During first use, the humidifier may take 10–25 seconds to start evaporating water.*

3. Tap repeatedly to cycle through fan speed settings: low, medium, and high.
4. When your room has reached your preferred humidity level, turn the humidifier to a lower setting, or turn it off. A comfortable humidity level is between 40% and 60%.

   Note:

   - *You can also set the humidifier to automatically stop evaporating water when the room reaches a specific humidity level (see **Auto Mode**, page 13).*
   - *It's normal for condensation to collect inside the humidifier top.*

5. Tap ⏻ to turn your humidifier off.

Auto Mode

Auto Mode uses the humidifier's sensor to automatically adjust the fan speed level to maintain a target humidity level. The default target humidity for Auto Mode is 50% when it is not connected to the VeSync app.

Note:

- *You can use the VeSync app to turn on/off Auto Mode and to select Auto Home Mode or Auto Away Mode (see page 15).*
- *If the humidifier is on and connected to the VeSync app, tapping on the display will default to Auto Home Mode settings (see **Auto Home Mode**, page 15).*

1. Tap to turn Auto Mode on. The display will show the current relative humidity.

   Note: *The humidifier will automatically evaporate water for 15 seconds after being turned on, even if the room has reached the target humidity level.*

2. The humidifier will stop when the target humidity level is reached (default is 50%).
3. The humidifier will continue detecting the humidity level in the room. It will start and stop again according to the following table:

Target Humidity*	Fan Speed
> 10% of current humidity	High
≤ 10% of current humidity	Medium
< current humidity	Low

**Changing the default target humidity from 50% will change the humidity percentages accordingly.*

Humidity Mode

You can set a target humidity level from 30–80%, in increments of 5%. There are several ways to change the target humidity:

1. Change the target humidity in the VeSync app.
2. Tap on the display. Continue tapping to cycle through target humidity options.

When not connected to the VeSync app, the humidifier will automatically adjust the fan speed and humidity to the previous settings. The humidifier will start and stop the same as it would in Auto Mode.

Note:

- *You can use the VeSync app to turn Humidity Mode on/off, as well as select Smart Mode or Fan Mode (see page 16).*
- *If the humidifier is on and connected to the VeSync app, tapping on the display will default to Smart Mode (see **Smart Mode**, page 16).*

Sleep Mode

Sleep Mode changes the humidifier's fan speed setting to low and turns off the display, making it ideal for sleep.

1. Tap to turn Sleep Mode on.

   Note:

   - *Sleep Mode automatically turns off the display except for .*
   - *You can also turn Sleep Mode on/off in the VeSync app.*

2. When Sleep Mode is on, you can tap any button to wake up the display. If no other button is pressed after waking up the display, the display will turn off again after 6 seconds.
3. Once you wake up the display, tap , , or to exit Sleep Mode.

Dry Mode

Dry Mode uses low and high fan speeds to dry out the wick filters. This helps extend the life of the filters by preventing moisture buildup and mold.

- Tap repeatedly to cycle through settings: low, high, and off.
- The selected Dry Mode fan speed will show on the display.
- Low will run the fan for 2 hours.
- High will run the fan for 30 minutes.

  Note: *You can also turn Dry Mode on/off in the VeSync app.*

Automatic Dry Mode

- You can set Dry Mode to turn on automatically in the VeSync app (default is off).
- When turned on, the humidifier will automatically run Dry Mode every time before turning off.

Memory Function

The humidifier will remember your settings for fan speed, humidity level, Display Off, Sleep Mode, Auto Mode, and Wi-Fi connection when turned off or unplugged, and will resume those settings when turned back on.

Automatic Shutoff

The humidifier will automatically turn off when all of the water in the tank has been evaporated.

- will show on the display and blink for 10 seconds before the humidifier turns off.
- Fill the water tank (see **Filling & Refilling**, page 11).

If the humidifier top has been removed from the water tank, the humidifier will automatically stop. will show on the display and will turn off once the humidifier top is placed properly back on the water tank.

VeSync App Functions

The VeSync app allows you to access additional smart functions, including those listed below.

Remote Control From Your Phone

- Turn the humidifier on/off.
- Cycle through fan speed levels.
- Turn Auto Mode on/off and set target humidity level.
- Access Auto Home and Auto Away.
- Turn Sleep Mode on/off.
- Turn the display on/off.
- Turn the display lock on/off.
- Manage wick filter life.

Auto Home Mode

Auto Home Mode automatically adjusts humidity levels based on the current room temperature so you can always live in comfort.

Note:

- *If the humidifier is on and connected to the VeSync app, tapping on the display will default to Auto Home Mode settings.*
- *Auto Home Mode settings cannot be changed.*

Auto Home Mode Settings

Indoor Temperature	Default Target Humidity
≤ **64°F**	60%
65°–74°F	50%
> **74°F**	40%

Auto Away Mode

Auto Away Mode automatically adjusts humidity levels based on the current room temperature so you can return to comfort.

Note:

- *Auto Away Mode can only be accessed through the VeSync app.*
- *Auto Away Mode settings cannot be changed.*

Auto Away Mode Settings

Indoor Temperature	Default Target Humidity
< **74°F**	55%
≥ **74°F**	45%

Using Your Smart Humidifier (cont.)

Smart Mode

Smart Mode intelligently adjusts fan speed to reach the target humidity level. This mode takes into account the difference between the ambient humidity and target humidity for more efficient humidification.

Fan Mode

In Fan Mode, set a fan speed, and the humidifier maintains that fan speed to reach the target humidity level.

Monitor Humidity Levels

Check current humidity levels in the humidifier's environment.

Set Timers

Set a timer for 1–24 hours.

Third-Party Voice Control

Compatible with Amazon Alexa and Google Home® for voice commands.

Note: *The VeSync app is continually updated and app features will expand.*

Important Tips

Your humidifier must have the correct level of water in the water tank to work properly. If there is too much water in the tank, the humidifier cannot evaporate water.

- **Do not** place the humidifier on an inclined surface.
- **Never** pour water directly into the humidifier top. ***[Figure 3.1]*** **Only** add water directly to the water tank or through the support frame's inlet.
- Avoid moving or shaking the humidifier.
- Before moving the humidifier, turn it off, unplug it, and remove the water tank and empty any excess water.



Figure 3.1

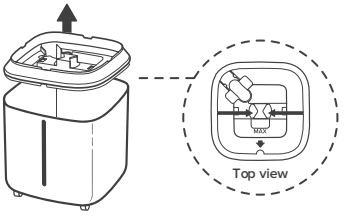

Figure 3.2

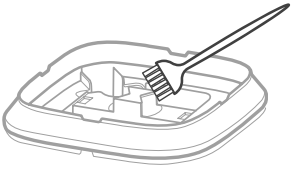

Figure 3.3

CARE & MAINTENANCE

Note:

- *All maintenance should be done on a water-resistant surface, such as a kitchen or bathroom floor.*
- *Change the water every 3 days to avoid bacteria growth.*
- *If not using the humidifier for 1 week or longer, **do not** leave water inside. Clean and dry the humidifier instead.*

Cleaning

You should clean your humidifier water tank every 3 days, and when you're ready to store it.

Note:

- ***Never** immerse the tank or humidifier top in water or liquid. **Do not** place any part of the humidifier in a dishwasher.*
- ***Do not** use detergents to clean the humidifier.*

1. Unplug the humidifier.
2. Remove the humidifier top and wick filter frame.
3. Remove the water pump from the support frame. Then, remove the support frame by pushing in both sides of the support frame's clamp and lifting. ***[Figure 3.2]***

Note:

- *That the pump cover can be removed*

4. Pour out any water from the tank.
5. Wipe all parts with a soft, damp cloth. Use the cleaning brush to scrub any residue off if needed. ***[Figure 3.3]***
6. Dry all parts with a clean cloth. Make sure all parts are completely dry before reassembling or storing.

Replacing the Wick Filters

The wick filters are washable and can last as long as 3–6 months depending on weather conditions and water quality. will light up as a reminder to check the filter. You may not need to change your filter yet, but you should check it when lights up.

Using Dry Mode helps extend the life of the wick filters by helping prevent moisture buildup and mold. To purchase additional wick filters, contact **Customer Support** (see page 27).

To clean:

Note: *The filter is recommended to be cleaned every two weeks*

1. Turn off the humidifier and remove the humidifier top.
2. Remove the wick filter frame and pull out the 4 wick filters from the frame. ***[Figure 4.1]***
3. Rinse the wick filters with water and use the cleaning brush to remove any residue. ***[Figure 4.2]***
4. Replace the wick filters into the wick filter frame. Make sure the side labeled "TOP" faces up.
5. Make sure the water pump is properly installed, then place the wick filter frame back onto the support frame. ***[Figure 4.3]***
6. Place the humidifier top on the water tank, aligning the Levoit logo with the water level window on the water tank. Turn on the humidifier. ***[Figure 4.3]***
7. Tap on the display to select low or high setting (see **Dry Mode**, page 14).
8. When Dry Mode is finished, press and hold for 3 seconds to reset .

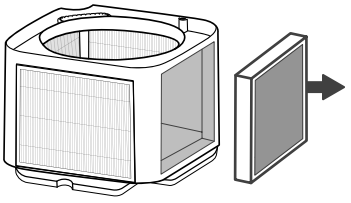

Figure 4.1

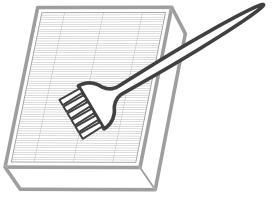

Figure 4.2

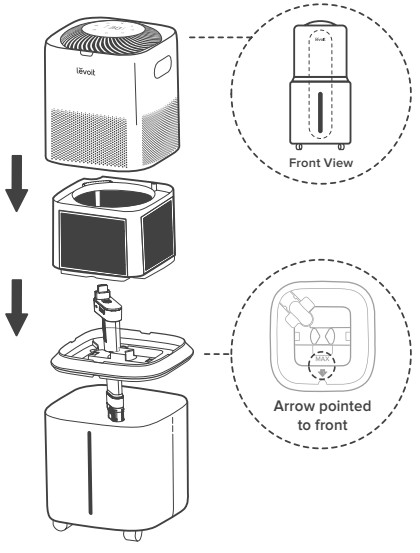

Figure 4.3

To replace:

1. Turn off the humidifier and remove the humidifier top.
2. Remove the wick filter frame and pull out the 4 wick filters from the frame. ***[Figure 4.1]***
3. Make sure the water pump is properly installed, then place the wick filter frame back onto the support frame. ***[Figure 4.3]***
4. Place the humidifier top on the water tank, aligning the Levoit logo with the water level window on the water tank. Turn on the humidifier. ***[Figure 4.3]***
5. Press and hold for 3 seconds to reset .

Descaling Your Humidifier

To ensure proper humidification, regularly descale (remove mineral buildup) inside the humidifier and water pump.

1. Fully dissolve ½ cup / 118 mL of 100% pure citric acid into 2 L of water. Make sure the water is below 140°F. Pour the mixture into the water tank. ***[Figure 4.5]***
2. Remove the wick filters from the wick filter frame and run the humidifier for 30 minutes. ***[Figure 4.6]***
3. Turn off the humidifier, pour out the citric acid solution, and thoroughly rinse the tank with clean water until no citric acid smell or mineral buildup remains. ***[Figure 4.7]***
4. **IMPORTANT:** Fill the water tank with 2 L of clean water and reassemble the humidifier. Run the humidifier for 5–10 minutes to clean the water pump to prevent the citric acid solution from crystalizing and creating a blockage in the pump. ***[Figure 4.8]***
5. Rinse the humidifier again, if necessary, then follow the instructions to reassemble (see **Getting Started**, page 10). ***[Figure 4.9]***

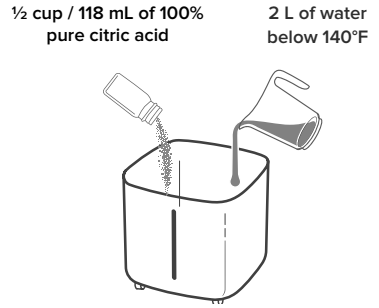

Figure 4.5

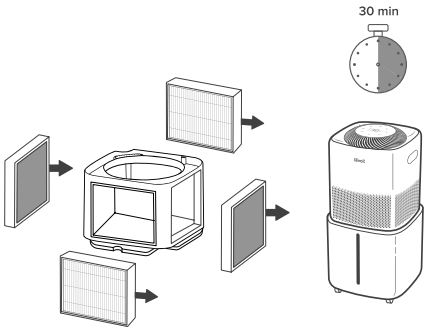

Figure 4.6

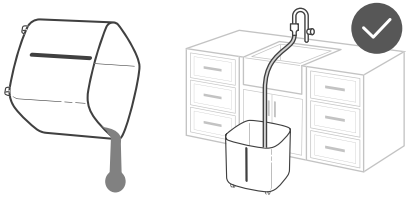

Figure 4.7

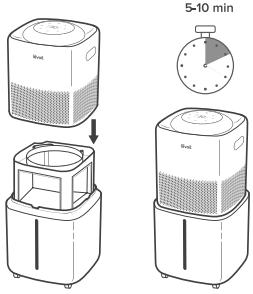

Figure 4.8

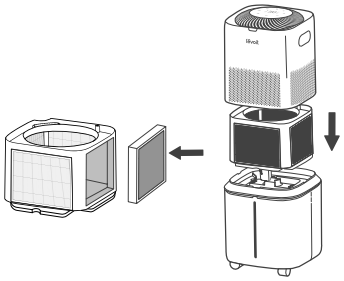

Figure 4.9

Storing

Follow the cleaning instructions and allow all parts to dry completely before storing. Store in a cool, dry location.

1. Use Dry Mode to dry the wick filters, then separate all parts. Remove leftover water from the tank and dry thoroughly.
2. Place the base of the water tank on top of the support frame. ***[Figure 4.10]***
3. Place the wick filter frame inside the water tank, followed by the humidifier top. ***[Figure 4.10]***
4. Place the humidifier and water pump into the storage bag.

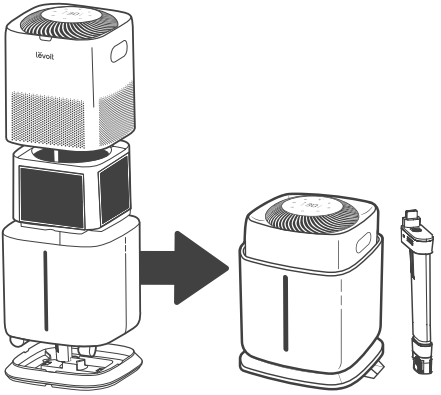

Figure 4.10

TROUBLESHOOTING

Problem	Possible Solution
Humidifier doesn't turn on, or turns off unexpectedly.	Plug the humidifier into a working outlet and turn it on.
	Add tap water to the water tank.
Air doesn't seem to be humid.	Turn the fan speed to a higher setting.
	Fill the water tank.
	There may be too much water in the tank. Pour out some of the water from the tank.
	Clean the humidifier (see **Care & Maintenance**, page 17).
	Make sure the humidifier is on a level surface.
	Clean the wick filters (see page 17). For information on additional replacements, contact **Customer Support** (see page 27).
Humidifier uses water too quickly.	The humidifier uses up water based on the environmental temperature and humidity. If your environment is cold and/or dry, the humidifier will run out of water faster.

TROUBLESHOOTING (CONT.)

Problem	Possible Solution
Humidifier produces an unusual smell.	If the humidifier is new, unplug and rinse all parts, then place in a cool, dry place for 12 hours.
	Clean the humidifier (see **Care & Maintenance**, page 17).
Humidifier makes a loud or unusual noise.	Make sure the water pump is properly installed in the support frame (see **Getting Started**, page 10).
	Set fan speed to a lower setting.
	Empty the water tank then refill the water tank (see **Filling & Refilling**, page 11).
	The humidifier may be malfunctioning. Stop using the humidifier and contact **Customer Support** (see page 27).
Water visibly leaks from the humidifier.	Avoid running the humidifier in a room with over 60% relative humidity (unless required for plants or furniture).
	Wipe any excess water off the top and bottom of the tank.
	Do not shake the humidifier.
	Make sure to place the humidifier on a flat, level surface.
	Check the water tank for leaks. If there are leaks, contact **Customer Support** (see page 27).
The area around the humidifier is damp or wet from condensation.	Humidity may be too high. Turn down the fan speed, turn off the humidifier, or open a door or window to the room.
	Open a window to ensure proper airflow for the humidifier, or move the humidifier to a more well-ventilated room.
	Make sure the water tank is properly in place (see **Getting Started**, page 10).
	When replacing the water tank, wipe off excess water from the water tank.
Mold grows inside the humidifier.	Clean the water tank regularly (see **Care & Maintenance**, page 17).

TROUBLESHOOTING (CONT.)

Problem	Possible Solution
lights up red.	Fill the water tank.
	Make sure all parts are installed correctly (see **Getting Started**, page 10).
	This may be caused by prolonged inactivity. Reactivate the pump manually by doing the following: • Press and hold both and for 5 seconds. • Optionally, tap “Activate” on the control page of the VeSync app. Reactivation may take around 1 minute. Repeat if necessary.
Display shows an incorrect humidity percentage.	Moisture may have built up inside the humidity sensor. Turn off the humidifier and allow the sensor to air dry.
	If the humidifier is placed within 12 in / 30 cm of a wall or in a corner, the humidity sensor cannot provide a proper reading for the relative humidity in the room.
	The humidity sensor will give an improper reading if it is exposed to dust. Avoid using the humidifier in dusty rooms.
The humidity level isn’t changing in my room.	Use a higher fan speed setting.
	Depending on your environment, the humidifier may take longer to humidify your air.
Display shows Error Code “E1”, “E2”.	The humidifier is malfunctioning. Contact **Customer Support** (see page 27).

If your problem is not listed, please contact **Customer Support** (see page 27).

VESYNC APP TROUBLESHOOTING

Why isn't my humidifier connecting to the VeSync app?

- Make sure your phone has Bluetooth® turned on and is not currently connected to another Bluetooth device.
- During the setup process, you must be on a secure 2.4GHz Wi-Fi network. Confirm that the network is working correctly.
- Make sure the Wi-Fi password you entered is correct.
- Make sure your humidifier and phone are within 30 ft / 10 m of each other.
- Reset the humidifier by pressing and holding ⏻ for 15 seconds. Then try connecting again.

My humidifier is offline.

- Make sure the humidifier is plugged in. The humidifier may appear to be offline if it is unplugged, or if the outlet does not have power.
- Refresh the VeSync menu by swiping down on the screen.
- Make sure your router is connected to the internet and your phone's network connection is working.
- Reset the humidifier using one of these options:
  - **a.** Delete the humidifier from the VeSync app. Swipe left (iOS®) or press and hold (Android), then tap **Delete**. Then reconfigure your humidifier with the VeSync app.
  - **b.** Press and hold ⏻ for 15 seconds. Then reconfigure your humidifier with the VeSync app.

Note: *Power outages, internet outages, or changing Wi-Fi routers may cause your humidifier to go offline.*

The VeSync app is displaying an incorrect humidity percentage while the humidifier is turned on.

- Moisture may have built up inside the humidity sensor. Turn off the humidifier and allow the sensor to air dry.
- If the humidifier is placed within 12 in / 30 cm of a wall or in a corner, the humidity sensor cannot provide a proper reading for the relative humidity in the room.
- The humidity sensor will give an improper reading if it is exposed to dust. Avoid using the humidifier in dusty rooms.

If your problem is not listed, please contact **Customer Support** (see page 27).

Federal Communication Commission Interference Statement – Part 15

This device complies with Part 15 of the FCC Rules. Operation is subject to the following two conditions:

1. This device may not cause harmful interference, and
2. This device must accept any interference received, including interference that may cause undesired operation.

NOTE: This equipment has been tested and found to comply with the limits for a Class B digital device, pursuant to Part 15 of the FCC Rules. These limits are designed to provide reasonable protection against harmful interference in a residential installation. This equipment generates, uses and can radiate radio frequency energy and, if not installed and used in accordance with the instructions, may cause harmful interference to radio communications. However, there is no guarantee that interference will not occur in a particular installation. If this equipment does cause harmful interference to radio or television reception, which can be determined by turning the equipment off and on, the user is encouraged to try to correct the interference by one or more of the following measures:

- Reorient or relocate the receiving antenna.
- Increase the separation between the equipment and receiver.
- Connect the equipment into an outlet on a circuit different from that to which the receiver is connected.
- Consult the dealer or an experienced radio/TV technician for help.

FCC Caution: Any changes or modifications not expressly approved by the party responsible for compliance could void the user's authority to operate this equipment.

FCC Radiation Exposure Statement

This equipment complies with FCC radiation exposure limits set forth for an uncontrolled environment. End users must follow the specific operating instructions for satisfying RF exposure compliance. To maintain compliance with FCC RF exposure compliance requirements, please follow operation instructions as documented in this manual. This transmitter must not be co-located or operating in conjunction with any other antenna or transmitter. This equipment should be installed and operated with a minimum distance of 20 cm between the radiator and your body. The availability of some specific channels and/or operational frequency bands are country dependent and are firmware programmed at the factory to match the intended destination. The firmware setting is not accessible by the end user.

FCC SDOC SUPPLIER'S DECLARATION OF CONFORMITY

Arovast Corporation hereby declares that this equipment is in compliance with the FCC requirements. The declaration of conformity can be found at:https://www.vesync.com/legal/compliance/fcc

LIMITED WARRANTY INFORMATION

Product Name	Superior 6000S Smart Evaporative Humidifier
Model	LEH-S602S-WUS
Date of Purchase	
Order ID	

Levoit Limited Product Warranty

Register your products at https://warranty.levoit.com/warranty to stay up to date with important product information such as product updates, limited warranties, usage and maintenance recommendations, and notifications concerning safety warnings or product recalls. Registration is not required to claim your limited warranty.

Two (2) Year Limited Consumer Product Warranty

Arovast Corporation ("Arovast") warrants that the product shall be free from defects in material and workmanship for a period of **2 years from the date of original purchase** ("Limited Warranty Period"), provided the product was used in accordance with its use and care instructions (e.g., in the intended environment and under normal circumstances).

Your Limited Warranty Benefits

During the Limited Warranty Period and subject to this limited Warranty Policy, Arovast will, in its sole and exclusive discretion, either (i) refund the purchase price if the purchase was made directly from the online Levoit store, (ii) repair any defects in material or workmanship, (iii) replace the product with another product of equal or greater value, or (iv) provide store credit in the amount of the purchase price.

Who is Covered?

This limited warranty extends only to the original consumer purchaser of the product and is not transferable to any subsequent owner of the product, regardless of whether the product transferred ownership during the specified term of the limited warranty. The original consumer purchaser must provide verification of the defect or malfunction and proof of the date of purchase to claim the Limited Warranty Benefits.

Be Aware of Unauthorized Dealers or Sellers

This limited warranty does not extend to products purchased from unauthorized dealers or sellers. Arovast's limited warranty only extends to products purchased from authorized dealers or sellers that are subject to Arovast's quality controls and have agreed to follow its quality controls. Please be aware, products purchased from an unauthorized website or dealer may be counterfeit, used, defective, or may not be designed for use in your country. You can protect yourself and your products by making sure you only purchase from Arovast or its authorized dealers.
If you have any questions about a specific seller, or if you think you may have purchased your product from an unauthorized seller, please contact our Customer Support Team via support@levoit.com

What's Not Covered?

- Normal wear and tear, including parts that might wear out over time (e.g., batteries, filters, cleaning brush, essential oil pads, etc.).
- If the proof-of-purchase has been altered in any way or is made illegible.
- If the model number, serial number or production date code on the product has been altered, removed or made illegible.
- If the product has been modified from its original condition.
- If the product has not been used in accordance with directions and instructions in the user manual.
- Damages caused by connecting peripherals, additional equipment or accessories other than those recommended in the user manual.
- Damages or defects caused by accident, abuse, misuse, or improper or inadequate maintenance.
- Damages or defects caused by service or repair of the product performed by an unauthorized service provider or by anyone other than Arovast.
- Damages or defects occurring during commercial use, rental use, or any use for which the product is not intended.
- If the unit has been damaged, including but not limited to damage by animals, lightning, abnormal voltage, fire, natural disaster, transportation, dishwasher, or water (unless the user manual expressly states that the product is dishwasher-safe).
- Incidental and consequential damages.
- Damages or defects exceeding the cost of the product.

Claiming Your Limited Warranty Service in 5 Simple Steps:

1. Make sure your product is within the specified limited warranty period.
2. Make sure you have a copy of the invoice and order ID or proof-of-purchase.
3. Make sure you have your product. **DO NOT** dispose of your product before contacting us.
4. Contact our Customer Support Team via support@levoit.com
5. Once our Customer Support Team has approved your request, please return the product with a copy of the invoice and order ID.

Sole and Exclusive Remedy

THE FOREGOING LIMITED WARRANTY CONSTITUTES AROVAST CORPORATION'S EXCLUSIVE LIABILITY, AND YOUR SOLE AND EXCLUSIVE REMEDY, FOR ANY BREACH OF ANY WARRANTY OR OTHER NONCONFORMITY OF THE PRODUCT COVERED BY THIS LIMITED PRODUCT WARRANTY STATEMENT. THIS LIMITED WARRANTY IS EXCLUSIVE, AND IN LIEU OF ALL OTHER WARRANTIES. NO EMPLOYEE OF AROVAST CORPORATION OR ANY OTHER PARTY IS AUTHORIZED TO MAKE ANY WARRANTY IN ADDITION TO THE LIMITED WARRANTY IN THIS LIMITED PRODUCT WARRANTY STATEMENT.

Disclaimer of Limited Warranties

TO THE FULLEST EXTENT PROVIDED BY APPLICABLE LAW, EXCEPT AS WARRANTED IN THIS LIMITED PRODUCT WARRANTY POLICY, AROVAST CORPORATION PROVIDES THE PRODUCTS YOU PURCHASE FROM AROVAST CORPORATION "AS IS" AND AROVAST CORPORATION HEREBY DISCLAIMS ALL WARRANTIES OF ANY KIND, WHETHER EXPRESS OR IMPLIED, STATUTORY, OR OTHERWISE, INCLUDING BUT NOT LIMITED TO ANY WARRANTIES OF MERCHANTABILITY, NON-INFRINGEMENT, AND FITNESS FOR PARTICULAR PURPOSE.

Limitations of Liability

TO THE FULLEST EXTENT PROVIDED BY APPLICABLE LAW, IN NO EVENT WILL AROVAST CORPORATION, ITS AFFILIATES, OR THEIR LICENSORS, SERVICE PROVIDERS, EMPLOYEES, AGENTS, OFFICERS, OR DIRECTORS BE LIABLE FOR:

(a) DAMAGES OF ANY KIND ARISING OUT OF OR IN CONNECTION WITH PRODUCTS PURCHASED FROM AROVAST CORPORATION IN EXCESS OF THE PURCHASE PRICE PAID BY THE PURCHASER FOR SUCH PRODUCTS, OR

(b) INDIRECT, SPECIAL, INCIDENTAL, CONSEQUENTIAL, OR PUNITIVE DAMAGES EVEN IF AROVAST CORPORATION OR ONE OF ITS SUPPLIERS HAS BEEN ADVISED OF THE POSSIBILITY OR LIKELIHOOD OF SUCH DAMAGES.

AND REGARDLESS OF WHETHER CAUSED BY TORT (INCLUDING NEGLIGENCE), BREACH OF CONTRACT, OR OTHERWISE. OUR LIABILITY SHALL UNDER NO CIRCUMSTANCES EXCEED THE ACTUAL AMOUNT PAID BY YOU FOR THE DEFECTIVE PRODUCT, NOR SHALL WE UNDER ANY CIRCUMSTANCES BE LIABLE FOR ANY CONSEQUENTIAL, INCIDENTAL, SPECIAL OR PUNITIVE DAMAGES OR LOSSES, WHETHER DIRECT OR INDIRECT.

EXCEPT AS COVERED BY THIS LIMITED PRODUCT WARRANTY STATEMENT, AROVAST CORPORATION SHALL NOT BE LIABLE FOR COSTS ASSOCIATED WITH THE REPLACEMENT OR REPAIR OF PRODUCTS PURCHASED FROM IT, INCLUDING, BUT NOT LIMITED TO, LABOR, INSTALLATION, OR OTHER COSTS INCURRED BY THE USER AND, IN PARTICULAR, ANY COSTS RELATING TO THE REMOVAL OR REPLACEMENT OF ANY PRODUCT.

OTHER RIGHTS YOU MAY HAVE

SOME JURISDICTIONS DO NOT ALLOW FOR: (1) EXCLUSION OF IMPLIED WARRANTIES; (2) LIMITATION ON THE DURATION OF IMPLIED WARRANTIES; AND/OR (3) EXCLUSION OR LIMITATION OF INCIDENTAL OR CONSEQUENTIAL DAMAGES; SO THE DISCLAIMERS IN THIS POLICY MAY NOT APPLY TO YOU. IN THESE JURISDICTIONS YOU HAVE ONLY THE IMPLIED WARRANTIES THAT ARE EXPRESSLY REQUIRED TO BE PROVIDED IN ACCORDANCE WITH APPLICABLE LAW. THE LIMITATIONS OF WARRANTIES, LIABILITY, AND REMEDIES APPLY TO THE MAXIMUM EXTENT PERMITTED BY LAW.
ALTHOUGH THIS LIMITED WARRANTY GIVES YOU SPECIFIC LEGAL RIGHTS, YOU MAY HAVE OTHER RIGHTS IN YOUR JURISDICTION. THIS STATEMENT OF LIMITED WARRANTY IS SUBJECT TO APPLICABLE LAWS THAT APPLY TO YOU AND THE PRODUCT. PLEASE REVIEW THE LAWS IN YOUR JURISDICTION TO UNDERSTAND YOUR RIGHTS FULLY.

CHANGES TO THIS POLICY

We may change the terms and availability of this limited warranty at our discretion, but any changes will not be retroactive.

This warranty is made by:

Arovast Corporation
1775 Flight Way, Suite 150
Tustin, CA 92782
USA

CUSTOMER SUPPORT

If you have any questions or concerns about your new product, please contact our Customer Support Team.

Arovast Corporation
1775 Flight Way, Suite 150
Tustin, CA 92782
USA
Email: support@levoit.com
Toll-Free: 1-888-726-8520

Support Hours

Mon–Fri, 9:00 am–5:00 pm PST/PDT

**Please have your order invoice PDF or screenshot(s) ready before contacting Customer Support.*

ATTRIBUTIONS

Amazon, Alexa, and all related logos are trademarks of Amazon.com, Inc. or its affiliates.

Google, Android, and Google Play are trademarks of Google LLC.

App Store® is a trademark of Apple Inc.

Wi-Fi® is a registered trademark of Wi-Fi Alliance®.

iOS is a registered trademark of Cisco Systems, Inc. and/or its affiliates in the United States and certain other countries.

The Bluetooth® word mark and logos are registered trademarks owned by Bluetooth SIG, Inc. and any use of such marks by Arovast Corporation is under license. Other trademarks and trade names are those of their respective owners.



lĕvoit®

A2_25G15_us