Whale - Support UK

UK

Water System Enquiries
Tel: 028 9127 0531
Email: info@whalepumps.com

Heater and i Van® Enquiries
Tel: 0845 217 2933
Email: ivan@whalepumps.com

Call us directly for product and installation advice

Ref: cok_180.52_v12_05.2015

produced and created by treehouse communications t. +44 (0) 28 9031 4144

Whale®

We are passionate about delivering
quality, innovation and **service**

New Products Inside

Water Pumps & Supply | Taps & Showers | Water Heating
Space Heating | Plumbing | Intelligent Control®

Whale® still leading innovation

Whale® offers a professional and personal service. The company's expertise has been built on over 60 years of manufacturing high quality products for the recreational vehicle market.

At Whale, we consistently strive to provide our customers with innovative, market leading products with professional proactive support services.

In achieving this, our employees will consistently act with integrity and honesty, and radiate a passion for our company, our culture and for customers.

Index

About Us

Typical Installation 5
Meet the Whale® Team 7
Whale® Support 8
Whale® Go Caravanning 9

NEW Intelligent Control®

i Van® – Intelligent Control Panel 12
Watermaster® IC – Pump Controller 14

Space Heater Range 18
Water Heater Range 28

Water Pumps and Supply

NEW Watermaster® On Board Pump 40
Watermaster® Exterior Pump Range 42
Watermaster® Exterior Socket Range 44
Underfloor 40L Fresh Water Tank 45
Submersible Freshwater Pump Range 46
In Line Booster Freshwater Pump Range 48
Watermaster® Mains Water Hook-Up 50
Portable Pump Kit 52
Superfil Pump Kit 54

Manual Pumps

V Freshwater Pump 56
Babyfoot Freshwater Pump 57

Quick Connect™ Plumbing

Plumbing Systems 58

Taps and Showers

Elite Tap and Shower Range 64
Elegance Tap and Shower Range 66
Swim'n'Rinse – Exterior Shower 70

Water System Accessories

AquaSmart® Water Filter 74
Aquasource Clear Water Filter 74
Pressure Switch 75
Surge Damper 76
One Way Valves 77
Electric Solenoid Valve 78

Whale® Support

Pre-season Preparation 80
Getting Ready for Winter 81
Adjusting your Pressure Switch 82
On Board Pump Guide 83
Calibration Quick Guide for Watermaster® IC 87
i Van® Quick Guide 88
i Van® Options Guide 93
Space Heater Fault Finding 95
Water Heater Fault Finding 96
Service Kits and Accessories 97
Affiliations and Accreditations 104
Customer Support Services 106

Fit Whale® throughout your van

Whale® manufactures high quality reliable water and heating systems for caravan and motorhomes. Our products are lightweight, durable and proven to provide reliable heating and water supply to allow you to have great leisure experiences. All this is backed up by a dedicated Whale® Support team on hand to provide spares and technical assistance when you need it.

Easy Install | Efficiency | Light Weight | Reliability | Serviceability

Typical Whale® Water and Heating Installation

WHALE® QUICK CONNECT™ PLUMBING

Reliable plumbing solutions specifically designed for mobile applications. Pages 58-61

WHALE® TAPS AND SHOWERS

Whale® modern style taps and showers are lightweight and the range includes models for use with either micro-switch or pressure switch systems. Pages 64-71

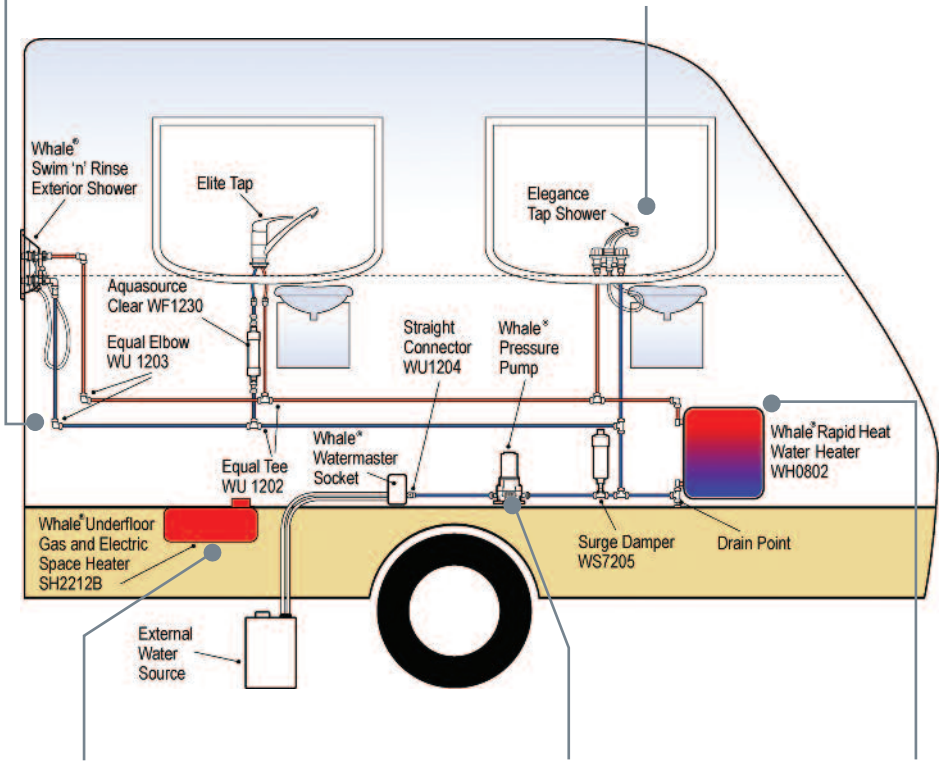

WHALE® SPACE HEATING

A full range of blown air space heaters designed to maximise living space inside the van. Pages 16-25

WHALE® PUMPS AND WATER SUPPLY

Our wide range of pumps are designed to deliver smooth constant supply. Pages 40-57

WHALE® WATER HEATING

Our range of water heaters include high capacity and fast heat up models operating on gas and or electric. Pages 38

See our latest Intelligent Control® Range – pages 11 -15

IC Intelligent Control®

Quality

Every product, fully tested, every time

At Whale®, we pride ourselves on applying sophisticated manufacturing technology coupled with the latest design techniques. Whale® employees are committed to providing excellent customer service.

Innovation

Award winning designs

Whale's proven pioneering technology has led the way for decades. Innovations in pumps, plumbing systems, heating technology and advanced electronics have resulted in ground-breaking products such as Whale® Underfloor Space Heating, and a new Intelligent Control® range.

Service

Tried and tested, trusted for decades

Our strong reputation for reliability has been built on decades of experience in UK manufacturing. We support our products with advice and service kits many years after the original fit.

Meet the Whale® Team

Richard Bovill
Engineering Director

Mark Walmsley
RV / Caravan International Commercial Director

Sarah Baird
Customer Support and Distribution Manager

Steed Barbour
Business Development Engineer

Andrew Peoples
Product Design Engineer

Chris Ragg
Senior Project Engineer

David Smyth
Design Engineer

Alex Duggan
Customer Support Engineer

Aoiffe Healy
Marketing Assistant RV

David Hopley
Product Design Engineer

Whale® Out and About

CARAVAN CAMPING & MOTORHOME SHOW 2015
17-22 February NEC Birmingham

MOTORHOME & CARAVAN SHOW 2015
13-18 October NEC Birmingham

The Camping and Caravanning Club
The Friendly Club

THE CARAVAN CLUB

Whale® Support

At Whale® we always do our best to support all products with the highest level of customer service.

Need water and heating system advice?

For Water Enquiries

Tel: 028 9127 0531

Email: info@whalepumps.com

For Heater and i Van® Enquiries

Tel: 0845 217 2933 7 Days A Week

Email: ivan@whalepumps.com

Whale® Go Where You Go

From purchase to pitch, if you have a query about your Whale® product, please contact us. We will be more than happy to help.

- Support from Whale® is available more easily than ever
- Nationwide network of Whale® trained service centres and mobile engineers
- Our widest range of service kits and spare parts

Find your nearest retailer or accredited service engineer

www.whalepumps.com/rv/where-to-buy.aspx

Choose a region for a list of retailers and accredited service engineers.

Experience and Understanding Whale® go Caravanning!

We go caravanning and it helps us to understand what you need when you are on site. At Whale®, we really live and breathe the leisure lifestyle.

Whale® go rallying

We attend caravan rallies around the UK so that you can get advice whatever the weather!

Our Whale® vans

Our company caravans are a great way for our design team to test installations and prototypes, as well as an opportunity for all employees to enjoy caravanning holidays.

A lifetime of caravanning

Our team include avid caravanning and motorhomers who have enjoyed a lifetime of caravan experience, as well those who have recently bought vehicles. This experience means we understand what you need on site.

What is Whale® IC?

Whale Intelligent Control®

A new innovation in system control

The latest in a long line of innovation from Whale®, Whale's IC products offer advanced technology systems for caravans and motorhomes. Intelligent Control® is built into these products to offer you our most advanced trouble-free water and heating supply ever!

i Van® Intuitive Touch Screen Control Panel

The easy way to control your living environment

IV1004B

Wireless Control of Whale® Water heater, Space Heater and water pump (optional)

Find out more: page 12

Watermaster® IC Pump Controller

- Ensures that you never need to adjust your pressure switch again, enjoy a smooth constant water supply
- Never let your pump run dry
- Protect and prolong your submersible pump life

Find out more: page 14

EP1632

NEW i Van® Control Panel

IC Intelligent Control®

- Simple Intuitive Icons
- Wireless Proven Home Automation Technology
- Intelligent and Easy to Use
- Touchscreen Controls
- Control Timers and Boost Functions Easily
- Hub One Control Panel for Water Heating, Space Heating and Water Supply.

- **The easy way to control your living environment**
- **Simple, intuitive touchscreen display**
- **Easy to set programmable timer**

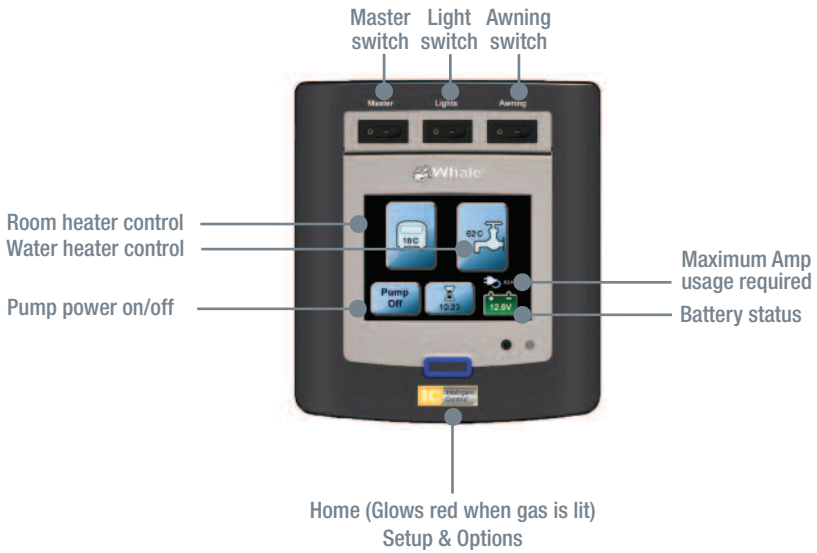

Pump control module is only IV1002B and IV1003B.
Please note: i Van® is available to vehicle manufacturers only.

Modern and Intelligent Control® Panel for Whale® Water Heaters, Space Heaters and Water Pumps.

How does Whale i Van® work?

The intuitive touchscreen control panel communicates wirelessly with Whale® Water and Space Heaters, creating your ideal living environment with ease. It simply guides you through setting your water heating and air temperature controls, and also allows you to set automatic timers (up to 3 per day) for each unit individually.

IV1001B

IV1002B

IV1003B

IV1004B

Product Code	Description
IV1001B	i Van® with water and space heater control
IV1002B	i Van® with water heater, space heater and pump control
IV1003B	i Van® with water heater, space heater, pump control and integrated switches
IV1004B	i Van® with underfloor water heater, space heater, pump control and integrated switches

Available to vehicle manufacturers only

Easy to set programmable heater timers*

- Up to 3 programmable settings per day, per unit
- Control temperature and power separately

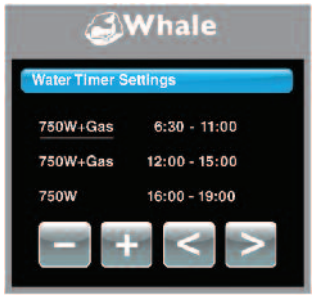

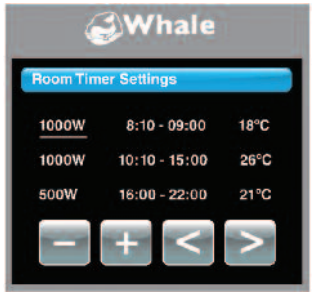

*Example timer settings shown are based on a site with amp usage limited to 10 Amps (approx. 2300W), and allows for other powered equipment to run simultaneously e.g. kettle/toaster etc.

Visit www.whalepumps.com for more information on i Van® features, instructions and video guides

Simple / Wireless / Intelligent / Touchscreen / Control / Hub

Please note: i Van® is available to vehicle manufacturers only

NEW Watermaster® IC Pump Controller

Intelligently controls the submersible pump for trouble-free operation and peace of mind

IC Intelligent Control®

- **Never adjust your pressure switch again**
  - Enjoy a smooth, constant water flow
- **Never let your pump run dry**
  - Protect and prolong your submersible pump's life
- **Easily retrofitted**
  - To Whale Watermaster® Exterior Socket with Pressure Switch (ES1001 or ES5001)

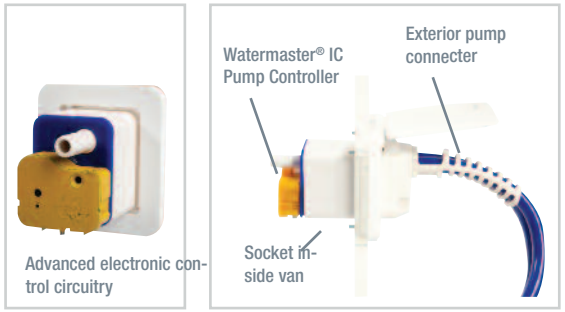

Watermaster® IC Pump Controller unit – fits easily to back of socket

How does Watermaster® IC Pump Controller work?

In a pressure based water system a surge in battery voltage can cause the internal pressure switch in the socket to fluctuate. This leads to pulsations in water flow. Similarly, if the battery voltage drops, the pump may be unable to produce enough pressure to activate the pressure switch and the pump may run on continuously. Also, if the external water container runs out, the pump will continue to run on. This drains the battery and may reduce the life of the pump. Until now, the only solution has been to manually adjust the pressure switch.

Watermaster® IC Pump Controller eliminates these problems and the need for pressure switch adjustment. Innovative electronic control circuitry monitors the level of battery voltage and compensates for any surges/reductions in battery voltage that can occur. It also cleverly senses when the water container runs dry and switches the pump off.

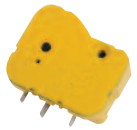

EP1632 Kit Includes: Watermaster® IC Unit

Watermaster® High Flow Pump

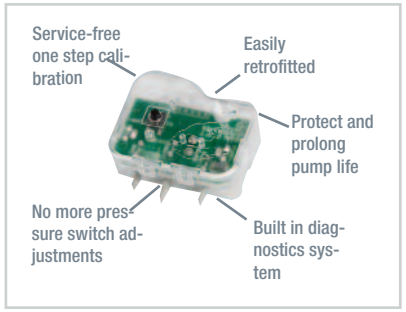

Intelligently controls the submersible pump

Easily retrofitted to a Whale® Watermaster pressure switch socket (only)

- Stops pump pulsating at high voltages
- Stops pump running continuously at low voltages
- Detects when water container has run out and turns pump off

Protect and prolong your submersible pump

- No more pressure switch adjustments
- Surge damper no longer required
- Protects and prolongs the submersible pump
- Helps lengthen the battery life
- Built-in fault diagnostics system
- Service free, one-step calibration process
- Easily retro-fitted*

*Note - Whale® Watermaster IC is compatible with a Whale® Watermaster pressure switch socket and a Whale® Watermaster High-Flow Pump Only

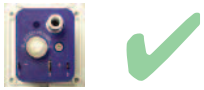

For use with

Whale Watermaster® sockets with built-in pressure switches as pictured above (ES1001 / ES5001)

Not compatible with

Inline pressure switch systems

Product Information

Watermaster® IC Pump Controller (with Intelligent Control®)

Part No:	EP1632
Voltage:	Voltage range 9.5V d.c. to 14.5V d.c. (normal operation) Voltage range 8.5V d.c. to 9.5V d.c.(limited operation)
Nominal Current:	Operating 3.7 Amps, Standby 0.007 Amps
Recommended fuse size:	5 amp Automotive
Weight:	0.65kg
Materials:	Pump body: ABS, Seals: Nitrile®, Strainer: Polypropylene Impeller: PBT, Cable: PVC, Grease Seal/I Nitrile®. Wire: PVC insulated copper, Hose: PVC, Plug: PBT Watermaster IC: Polycarbonate
Accessories:	WF1230 12 mm in-line water filter (available separately)
Service Kits:	Watermaster IC Pump Controller is not a serviceable part Replacement high-flow submersible pump EP1612
Performance	
Data @ 13.6V Discharge head: 0m (0ft) 1m (3ft) 3m (9ft) Compatible For use with Whale High-Flow pumps: Watermaster (EP1612) ONLY	 Flow rate per minute / current draw: 15.8 ltrs / 3.8 amps 14.8 ltrs / 3.7 amps 12.8 ltrs / 3.5 amps
Operating temperature range:	30°C to 40°C
Storage temperature range	-30°C to 60°C

Space Heating

Our room heating product range include models that run on gas or electric or both energy sources.

Our innovative underfloor models help vehicle designers to free up space inside the van.

Simple intuitive controls.

For advice on your Whale® Space Heater or for details of your local Whale® Authorised Dealer

Whale Support 0845 217 2933

Please note: All Whale® Space and Water Heater products must be installed and serviced by a qualified gas engineer in accordance with the appropriate installation instructions. Underfloor models available to vehicle manufacturers only.

NEW High Output Space Heater

NEW 4.3S High Output Underfloor Space Heater

Higher heat output, maximum performance

New boost setting balances gas and electric inputs to effectively and efficiently adjust the heat output

- Consistently delivers a comfortable living environment
- Uses both gas and electric for higher powered heating
- New twin ducting system for more installation options and higher heat output
- Mounted underfloor to maximise living and storage space inside the van
- Lightweight design
- No chimney or flue covers required
- Intuitive and simple controls

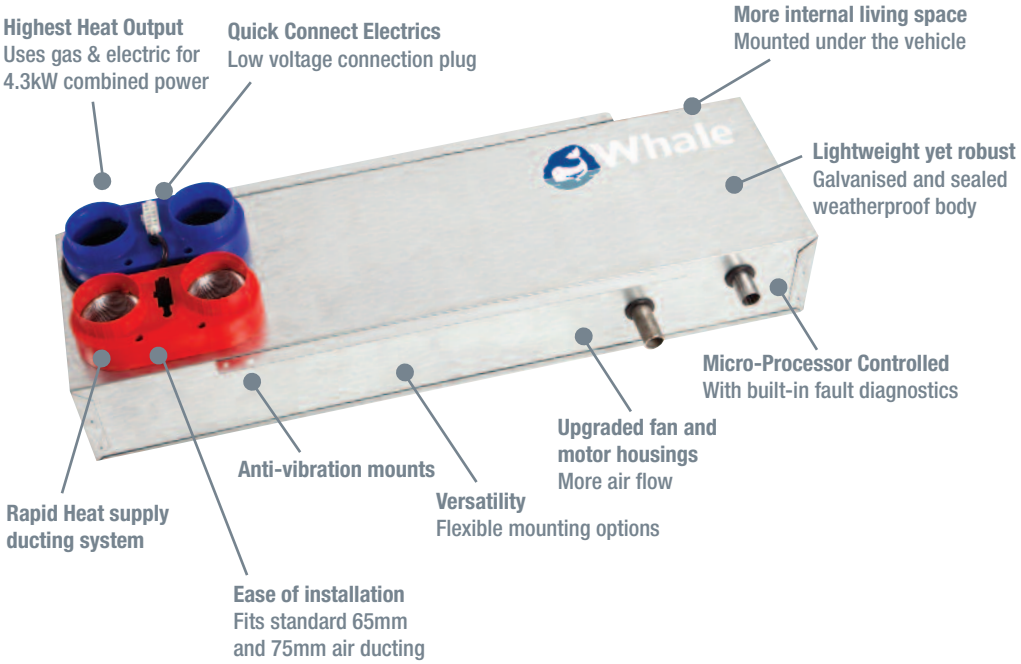

Please note: All Whale Space and Water Heater products must be installed and serviced by a qualified gas engineer in accordance with the appropriate installation instructions. Underfloor models available to vehicle manufacturers only.

Installation

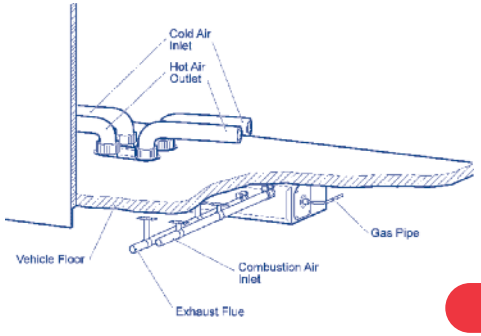

Typical Installation

Dimensions

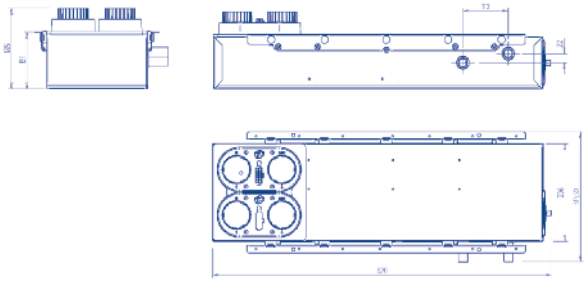

Control Panel

- **The easy way to control your living environment**
- **Simple, intuitive touchscreen display**
- **Easy to set programmable timer (up to 3 per device per day)**
- **Six variable heat settings:**

  - Low/Quiet Night Time Setting
  - Medium Heat Setting
  - High Heat Setting
  - Boost Setting
  - Circulation fan setting
  - Gas Only Setting

Model Specifications

Model	SH4412B/SI4412B (4.3kW Underfloor gas and electric)	
Gas	Gas Type Heat Input (Gross) Gas Connection Current Consumption (12V)	Butane & Propane 2.9kW 8mm Compression fitting 1.8 Amps (<22W) (0.01 Amps on stand by)
Electricity	Supply Heat Input (Gross) Max. Current Consumption (230V) Max Current Consumption (12V)	12V d.c. + 230V a.c. 50 Hz 2.0kW 9 Amps (2kW settings) 2.2 Amps (2kW settings)
Gas & Electric	Combined	12V d.c + 230V a.c. 50 Hz

Certified to: ECE_R 122
4kW Underfloor gas and electric model also available (Model Number: SH4312B)

- Easy to mount
- Flexible ducts for easy installation
- Flue pipes mounted underfloor for safe and discreet space saving
- Available in 0.75m (FK2075), 1.25m (FK2125) and 2m (FK2020) lengths.

Flue Mounting Options

Please note: For space heating accessories see page 28

Space Heater Range

Gas and Electric Space Heaters Underfloor Models

External location, more internal living space

Features and Benefits

- **External location - most compact installation option**
  - More internal living space
- **Lightweight yet robust**
- **Built to withstand harsh external conditions**
- **Weatherproof body**
  - galvanised and sealed
- **Flue system redesigned for shorter depth**
  - more clearance underneath the vehicle
- **No flue vent through the floor removes the risk of water ingress**
- **Quiet night time setting available on electric model**

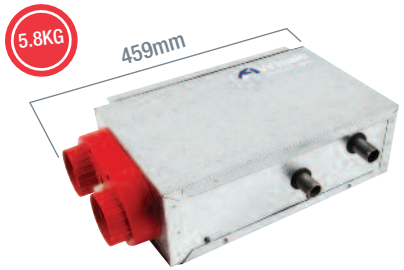

SH2211B Underfloor Gas Only Model

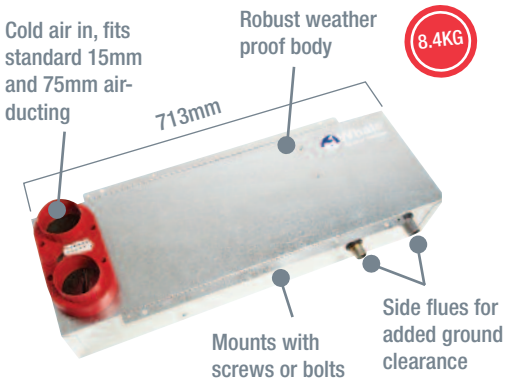

SH2212B Underfloor Gas and Electric Model

3 Year Warranty

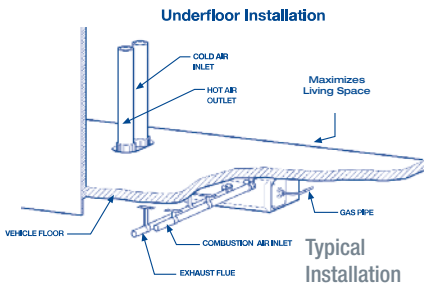

Typical Installation

Product Information

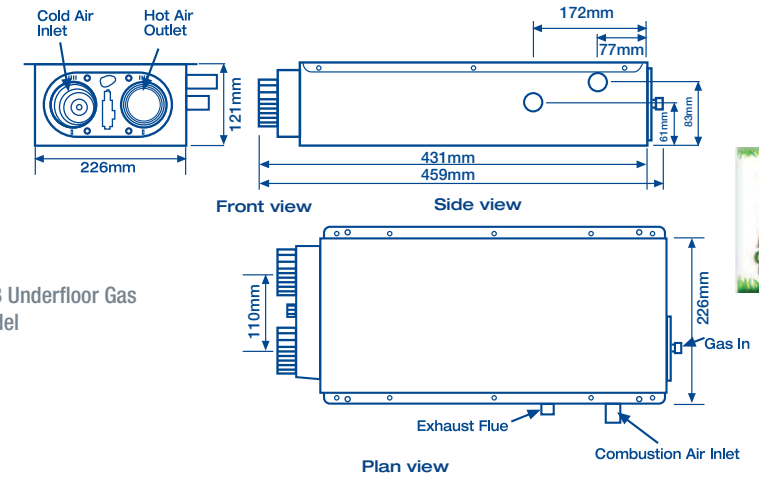

SH2211B Underfloor Gas Only Model

SH2212B Underfloor Gas and Electric Only Model

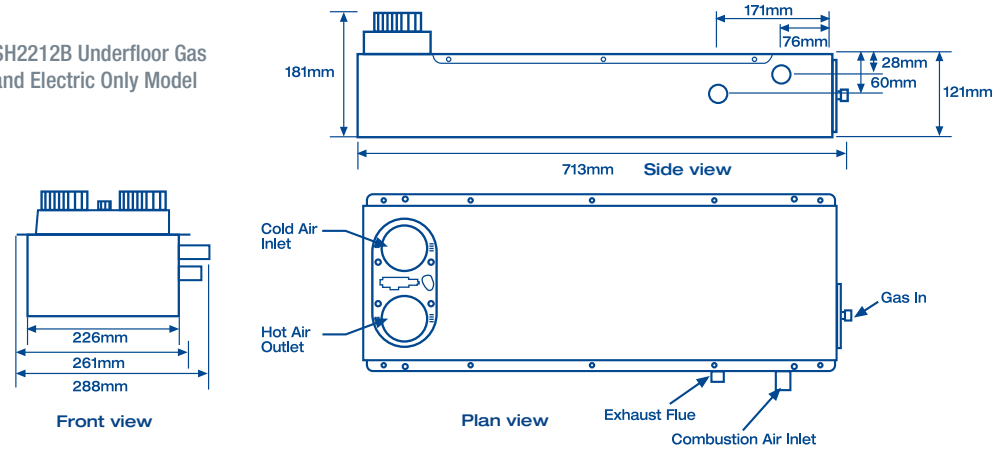

Please note: All Whale® Space and Water Heater products must be installed and serviced by a qualified gas engineer in accordance with the appropriate installation instructions. Underfloor models available to vehicle manufacturers only.

Please see page 24 for specification details
Please note: for space heater accessories see page 26

Space Heater Range

Gas and Electric Space Heaters - Installed inside the vehicle

- Choose from gas only, or gas and electric models
- Simple and intuitive to use
- More compact installation
- Better insulation
- Improved service access
- Lightweight unit (from only 5.7KG)
- No internal flue or chimney required
- No wiring, simply plug in

3 Year Warranty

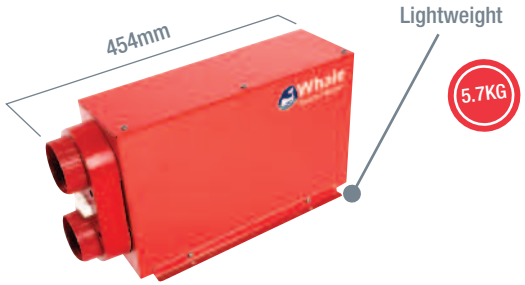

Space Heater
SH2201
Internal Gas Model

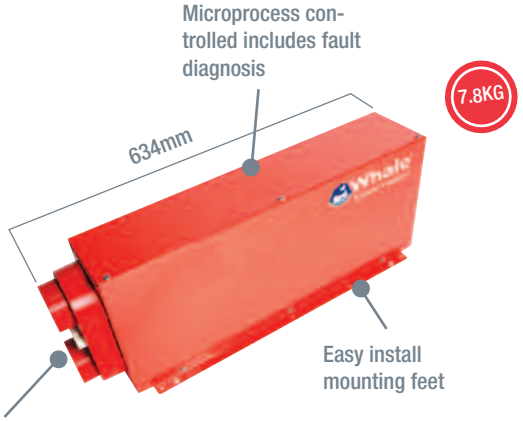

Space Heater
SH2202
Internal Gas and Electric Model

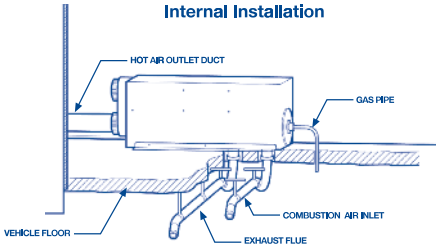

Typical
Installation

Please note: All Whale Space and Water® Heater products must be installed and serviced by a qualified gas engineer in accordance with the appropriate installation instructions. Underfloor models available to vehicle manufacturers only.

Product Information

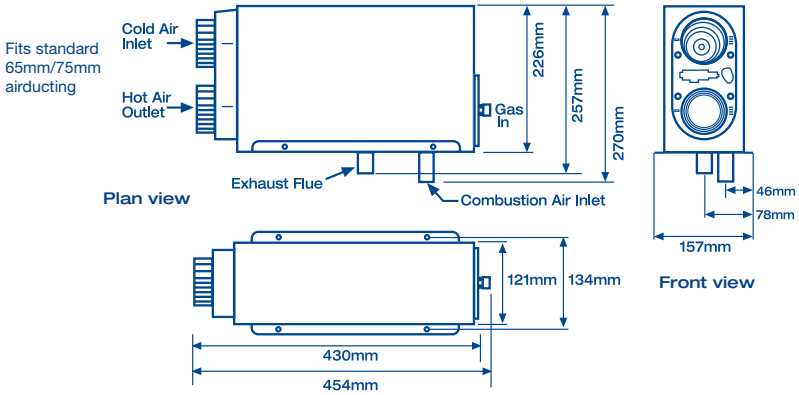

SH2201 Gas Model
Installed inside vehicle

SH2202 Gas and Electric Model
Installed inside vehicle

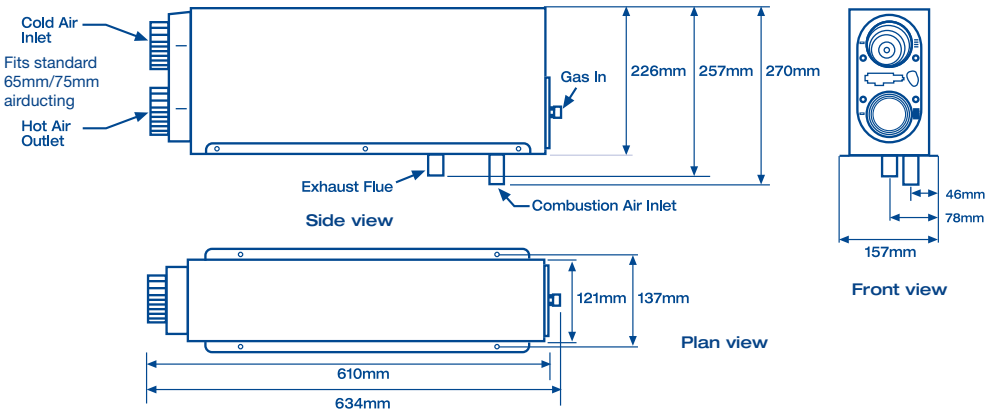

Please see page 24 for specification details
Please note: for space heater accessories see page 26

Space Heater Accessories

Flue Mounting Flexibility

- Flexible ducts for easy installation
- Flue pipes mounted under floor for safe and discreet, space saving.
- Available in various lengths, 0.75m (FK2075), 1.25m (FK2125), 2m (FK2020)

Minimal Wiring

3 Pin Plug
- Simply plug in
  - no wiring required

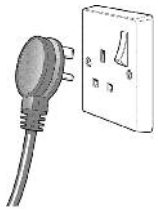

Choice of Vent Colours

- To suit your interior decor (Beige, Black, and Cream)
- Range includes fixed and directional options

Directional Fitting (DX6511)

Fixed Fitting (DX6516)

Directional Fitting (DX6531)

Fixed Fitting (DX6536)

Directional Fitting (DX6521)

Fixed Fitting (DX6526)

Simple to Use Control Panel

- Simple to use with position stops to prevent accidental adjustment
- Three Heat Settings
  - Quiet Night Time Setting (on electric 500W)
  - Heat Boost Setting (on electric 2000W)
  - Frost Protection Setting
- Easy to mount
- One 3.5m cable with modern connectors

Range of Ducting Fittings

- For standard 65mm air ducting for cold air inlet and hot air outlet

End Cap Fitting (DX6510BR)

Straight Fitting (DX6552BR)

T Fitting (DX6503BR)

Y Fitting (DX6554BR)

Spares

See Page 97 for a full list of available spares

Contact Whale® Support for more information

0845 217 2933

Maintenance

- Diagnostics system for easy fault finding
- See page 95 for Space Heater Fault Finding Guide

Space Heater Range

Intuitive and simple controls

- Electric settings 500W/1000W/2000W
- Gas setting
- Circulation fan setting

Certified to the following directives

- Low Voltage Directive 2006/95/EC
- Gas Appliance Directive 90/396/EEC
- EMC Directive 2004/108/EC
- Vehicle in Motion approved (for motorhomes!)

Model Specifications

Model	MODEL SH2201 (Interal Gas Only) see page 22-23 MODEL SH2202 (Interal Gas and Electric) see page 22-23 MODEL SH2211B (Underfloor Gas Only) see page 20-21 MODEL SH2212B (Underfloor Gas and Electric) see page 20-21	
Gas	Gas Type	Butane and Propane (29/37 or 30mbar regulators)
	Heat Input (Gross)	2.0 kW
	Gas Connection	8mm Compression fitting
	Current Consumption, (12V)	1.6 Amps (<20W) (0.01 Amps on stand by)
Electricity	Supply	12V d.c. + 230V a.c. 50 Hz
	Heat Input (gross)	2.0 Kw
	Max. Current Consumption, (230V)	9 Amps (2kW settings)
	Max. Current Consumption, (12V)	2.2 Amps (2kW settings)

Please note: All Whale® Space and Water Heater products must be installed and serviced by a qualified gas engineer in accordance with the appropriate installation instructions. Underfloor models available to vehicle manufacturers only.

Contact Whale® Support for details of your local Whale® Authorised Dealer:

Whale® Support 0845 217 2933

For advice on your Whale Space and Water heaters

UK

Available 7 Days a Week
Whale Heating and i Van® Enquiries

Tel: 0845 217 2933
Email: ivan@whalepumps.com

Call us directly for product and installation advice

NEW Whale Expanse™

An industry first, Whale's new gas and electric underfloor water heater.

The space creating underfloor water heater with super fast heat up times

- **More Space**
  - Installed under the vehicle to open up interior space
- **Faster Heat Up**
  - One shower in 11 minutes*
  - Two showers in 20 minutes*
- **More Control**
  - Heat water using gas, electric or both
  - Hot water available when you need it
  - 3 programmable timers

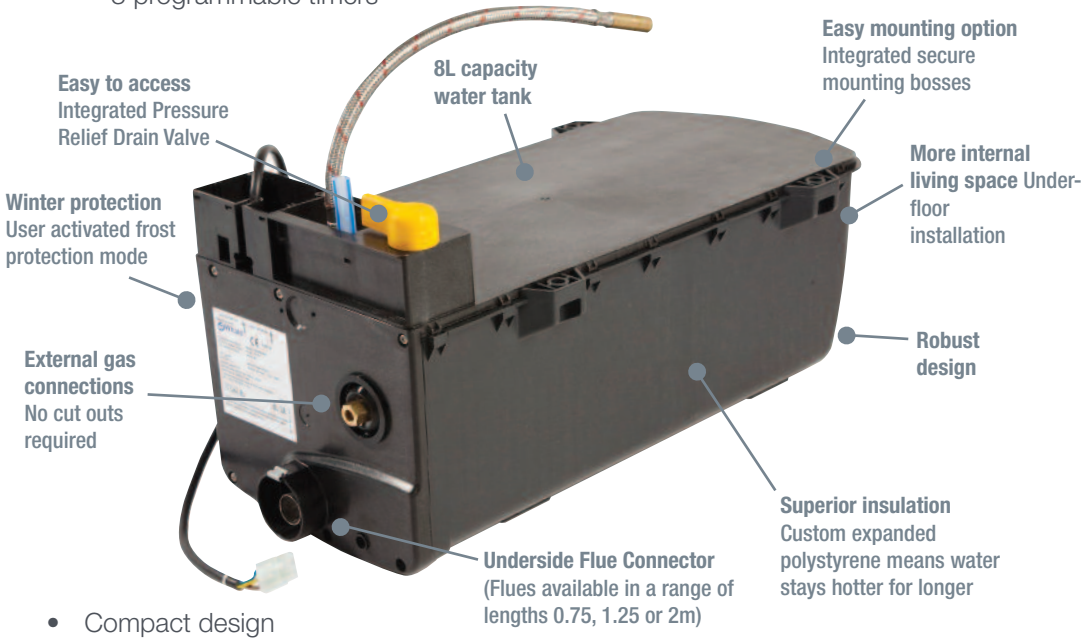

- Compact design
- Small internal footprint
- Easy to access pressure relief drain valve

Expanse - Under floor installation opens up living and storage space

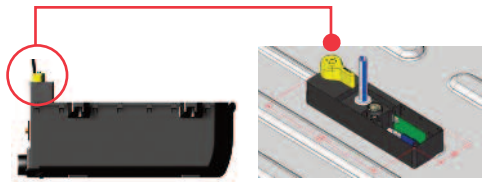

* According to Whale Laboratory testing, October 2014

* Please note under floor models are available to vehicle manufactures only

A first for the industry

The only complete under floor gas and electric water and space heating system...MORE SPACE, FASTER HEAT UP, MORE HEAT, AND MORE CONTROL

Expanse™, Whale's Underfloor Water Heater, is installed together with Whale's 4.3S High Output Space Heater, and unique iVan® Touch Screen Control Panel, all 3 innovations combine to deliver the only complete under vehicle gas and electric water and space heating system. Together, they deliver even more valuable living and storage space, Whale's highest output and fastest water heat up to date, all wirelessly controlled from an easy to use central location. Enhanced heating control and performance: no compromise water and space heating.

For more information contact Whale on **0845 217 2933**
Please note: Underfloor models are available to vehicle manufacturers only.

Water Heating

Our range of Water Heaters include
High Capacity and Rapid Heat models
Compact designs mean more living space

For advice on your Water Heater or for details of your local Whale® Authorised Dealer

Whale® Support 0845 217 2933

Please note: All Whale® Space and Water Heater products must be installed and serviced by a qualified gas engineer in accordance with the appropriate installation instructions.

High Capacity Water Heater

More hot water for longer
Gas and Electric Storage Water Heater 13L High Capacity

- **Compact design**
  - More internal living space
- **Easy installation**
- **Choice of settings**
  - Fast heat up or low current draw
- **New flue design**
  - Easily installed, no cover required
- **Pressure relief valve with drain function**
  - Drain water system faster
- **Highly durable burner design**
- **Robust polypropylene insulation**
  - Retains heat for longer
  - Shorter re-heat times
- **Simple to use ON/OFF control panel**
- **13 litre capacity**
- **Weighs only 10kg (dry weight)**

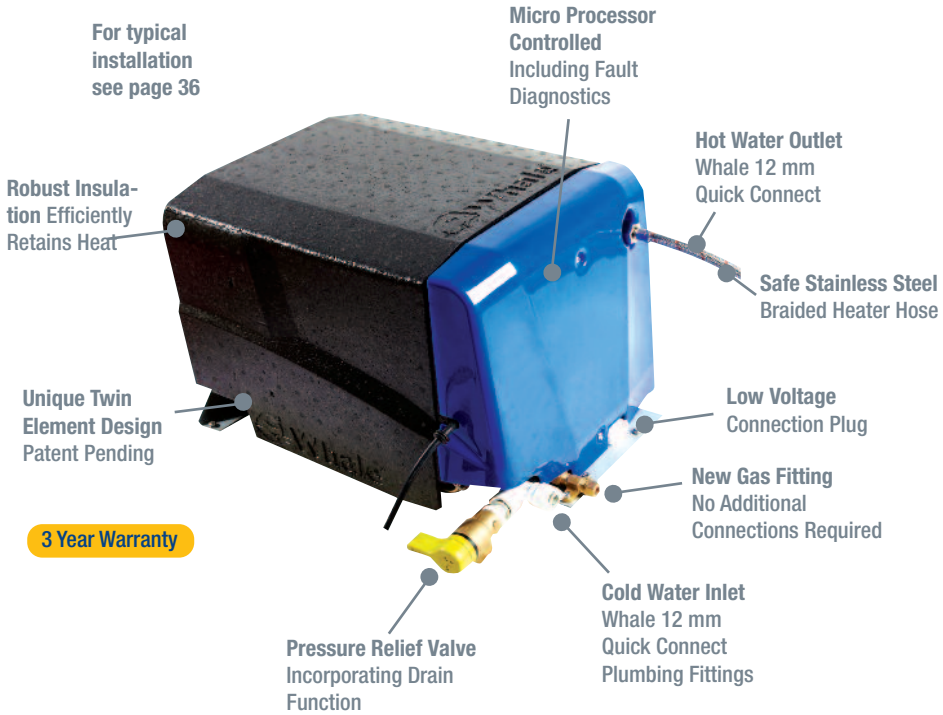

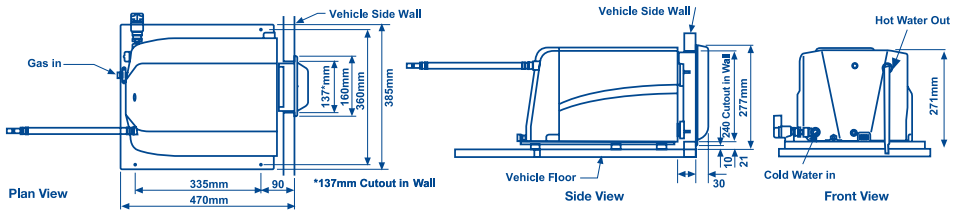

Please note: for water heating accessories see page 37

Model Specifications

Model	WH1302	
Water	Capacity Pressure relief valve setting Maximum water inlet pressure	13 litres 2.6 bar 1.9 bar
Gas	Gas Type Heat Input (net) Gas Consumption Gas Connection	Butane and Propane CAT I3+ (29/37) CAT I3B/P (30) 1.25kW 93 g/hr 8mm compression fitting
Electricity	Supply Electric lowest Eco Setting Electric highest setting Max. Current Consumption (12V) Max. Current Consumption (230V)	12V d.c. + 230V a.c. 50 Hz 600W 1500W 0.36 Amps (0.01 Amp on standby) 2.6 / 5.2 Amp
Approximate heat up times (15 to 70 degrees C)	Gas Operation Electrical Operation Gas & Electrical Operation	43 mins 32 mins 22 mins
Certified to the following directives	Low Voltage Directive 2006/95/EC Gas Appliance Directive 90/396/EEC EMC Directive 2004/108/EC Directive 74/483/EEC including 2006/96/EE Vehicle Type Approval	

Suitable for: Caravans, Motorhomes and Mobile Applications
Please note: All Whale Space and Water Heater products must be installed and serviced by a qualified gas engineer in accordance with the appropriate installation instructions.

Rapid Heat Water Heater

Compact design - fast heat up times
Gas and Electric Storage Water Heater
8L Rapid Heat

- **Compact designs**
  - More internal living space
- **Easy installation**
- **Choice of settings**
  - Fast heat up or low current draw
- **New flue design**
  - Easily installed, no cover required
- **Pressure relief valve with drain function**
  - Drain water system faster
- **Highly durable burner design**
- **Robust polypropylene insulation**
  - Retains heat for longer
  - Shorter re-heat times
- **Simple to use ON/OFF control panel**
- **8 litre capacity**
- **Weighs only 8kg (dry weight)**

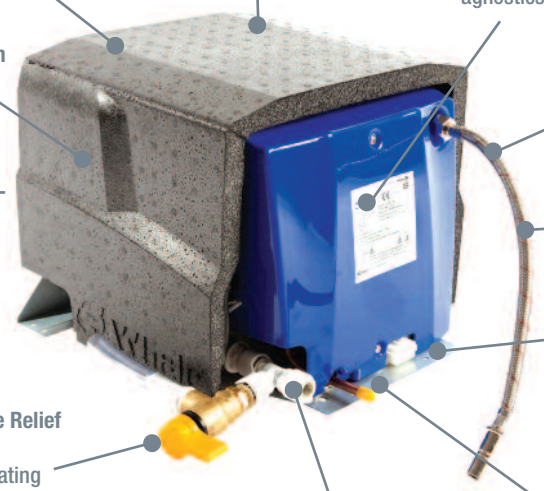

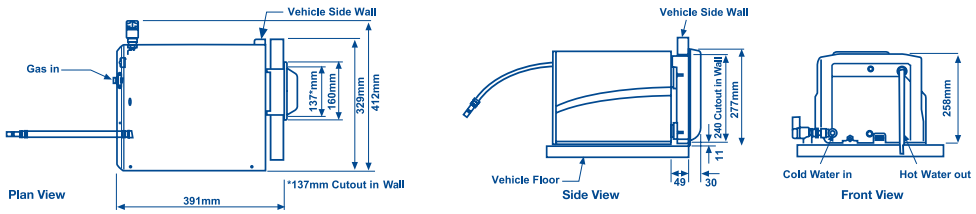

Please note: for water heating accessories see page 37

Model Specifications

Model	WH0802	
Water	Capacity Pressure relief valve setting Maximum water inlet pressure	8 litres 2.6 bar 1.9 bar
Gas	Gas Type	Butane and Propane CAT I3+ (29/37) CAT I3B/P (30)
	Heat Input (net) Gas Consumption Gas Connection	1.25kW 93 g/hr 8mm OD copper tube
Electricity	Supply Electric lowest Eco Setting Electric highest setting Max. Current Consumption (12V) Max. Current Consumption (230V)	12V d.c. + 230V a.c. 50 Hz 750W 1500W 0.36 Amps (0.01 Amp on standby) 6.5 Amps (1.5kW settings)
Approximate heat up times (15 to 70 degrees C)	Gas Operation Electrical Operation Gas & Electrical Operation	26 mins 20 mins 12 mins
Certified to the following directives	Low Voltage Directive 2006/95/EC Gas Appliance Directive 90/396/EEC EMC Directive 2004/108/EC Directive 74/483/EEC including 2006/96/EE Vehicle Type Approval	

Gas Only Model also available (Part Number WH0822)

Suitable for: Caravans, Motorhomes and Mobile Applications
Please note: All Whale Space and Water Heater products must be installed and serviced by a qualified gas engineer in accordance with the appropriate installation instructions.

Water Heater Range

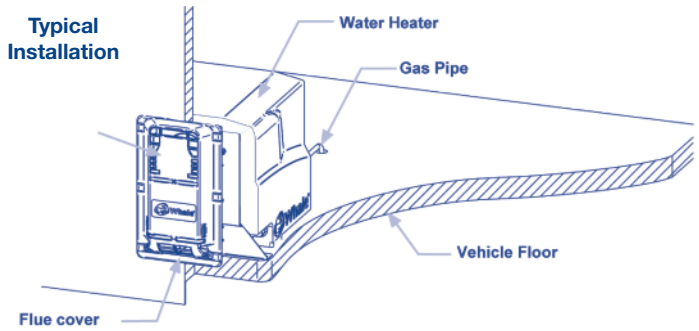

One Control Panel

Includes Easy to Mount and Use Control Panel

- One model 5 settings
- Simple to use Control Panel
- One 3.5m cable with simple connectors

One model - 5 running options

- Gas only setting
- Electric low setting (600W/2.6A)
- Electric high setting (1200W/5.2A)
- Gas and electric low setting
- Gas and electric high setting

Please note: All Whale® Space and Water Heater products must be installed and serviced by a qualified gas engineer in accordance with the appropriate installation instructions.

Contact Whale® Support for details of your local Whale® Authorised Dealer:

Whale® Support 0845 217 2933

Water Heater Accessories

Easily Assembled Flue

- New aesthetically designed flue
  - In line with type approval
- Innovative design
  - No cover required

Ideal Retro-fit

Replace your existing water heater by using our universal adaptor plate (included with Whale® Water Heater)

Minimal Wiring

3 Pin Plug

- Simply plug in
  - no wiring required

Quick Connect™ Plumbing

Whale 12mm Quick Connect Pre-Assembled Plumbing

- Quick connection to hot and cold water pipework
- Adaptors for other pipework systems included
- For details on our full plumbing range, contact Whale® Support

Spares

See Page 97 for a full list of available spares
Contact Whale® for more information
0845 217 2933

Maintenance

- Diagnostics system for easy fault finding
- Easily accessible components
- (See page 96 for Water Heater Fault Finding Guide)

Water Pumps and Supply

Whale's wide range of Water Supply products include manual and electric pumps, plumbing and accessories all manufactured in the UK to the highest quality standards.

Our renowned Watermaster® range now includes water pumps for fitting outside van or mounting on-board the vehicle.

NEW Watermaster® On Board Water Pump

Delivers smooth consistent flow and runs dry without damage

20% lighter than a Whale Smartflo!*

Plus, 8L of water per minute

2 Year Warranty

Lightweight

Only 1.48kg!

Vertically mounted to fit into tight spaces

Smooth constant flow from specifically designed diaphragms

Quick Connect 12mm ports

Fully sealed protective motor cover

Easy to install electric connections

Rubber feet to absorb vibration

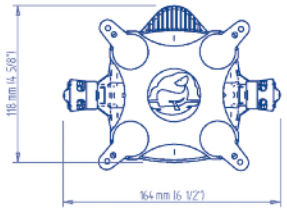

Plan View

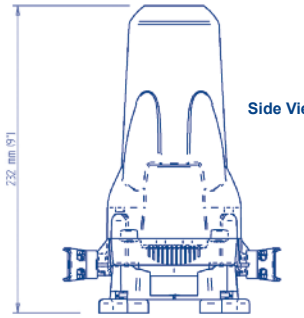

Side View

Tips

When the system is first used or if air is sucked into the system when emptying or refilling your water container:

1. Open one hot tap (e.g.) kitchen sink
2. Place hose into the external water container / onboard tank
3. Insert plug into wall socket and close lid to lock plug in place
4. Switch on 12V d.c. supply to pump
5. When water is flowing smoothly close hot tap and open cold tap to expel remaining air

Please note: Following these instructions will maximize the performance of your pump.

Please note: Pump's performance will depend on the plumbing system and restrictions on outlets in your caravan/motorhome.
*Based on tests carried out in the Whale® Laboratory, information is correct Sept 2012.

Model Specifications

Model	Watermaster® On Board P2V 8 Litre Capacity
Product Code	FP0814
Open Flow Rate per Min	8 ltrs
Voltage	12V d.c.
Cut Out Pressure	2 bar (30psi)
Recommended Fuse Size	5 amp automotive
Weight	1.48 kg (3.21 lbs)
Inlet/Outlet Size	Whale® Quick Connect™ 12 mm Female
Hose Connections	For ½" flexible hose use WU1282 (supplied with pump) For ⅜" flexible hose use WU1280 (not supplied with pump)
Semi-rigid Pipework System Connections	For Whale Quick Connect 12mm NO ADAPTOR REQUIRED 12mm semi-rigid pipe WX7112 (not supplied with pump)
Materials in Contact with Liquid	Glass-filled Polypropylene, Monprene® Nitrile®, Stainless Steel
Service Kits	Microswitch Kit AK1317, Full head service kit AK1318 Strainer replacement AK1320, see page 91
Maximum Wire Size	2.5 mm² (13AWG)
Maximum Head	20 m (66 ft)
Maximum Lift	3 m (10 ft)

Important

- ONLY 8 ltr pressurised pumps are suitable for caravan or motorhome installation
- The inlet strainer included with this product is ONLY suitable for caravan and motorhome installations that ONLY PUMP FROM AN ON BOARD WATER TANK. It is not suitable for mains water connections.

Watermaster® On Board Pump - Typical uses:

- Providing water from tank to taps
- Filling the on-board tank from the outside

Typical Installation Standard System

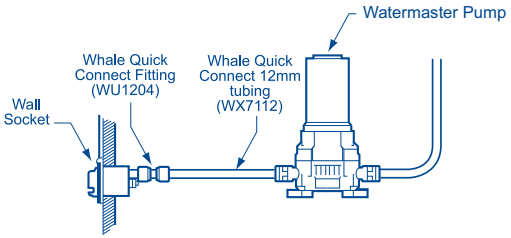

Typical Installation Manual System for use with on-board water tanks

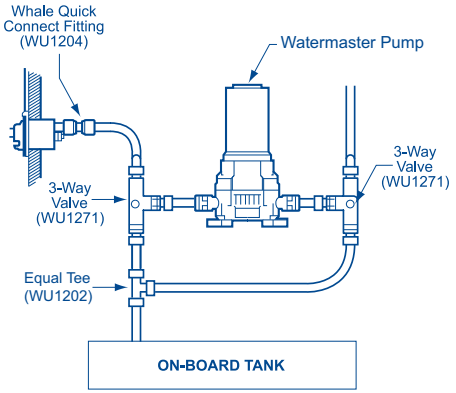

For guide on caring for your On Board Pump see page 87

Whale Has A Plug For You!

Easy to fit for great water supply and high flow rates for your van.

EP1612

- With 12V d.c High Flow Pump
- **Compatible with Whale Watermaster® Exterior Socket**

Your Whale Watermaster® *with Easi-Push™* Plug Includes:

- Easi Push™ Plug
- High Flow Pump (EP1612)
- Extra flexible hose
- Protected electrics
- High quality dust cover
- Safety strainer
- Narrow pump design
- Built-in hose holder

EP1622

- with 12V d.c High Flow Pump
- **Compatible with Truma Crystal II Filter and Truma Crystal II Compact Housings**

Your Whale Watermaster® *with Easi-Squeeze™* Plug Includes:

- Easi Squeeze™ Plug
- High Flow Pump (EP1622)
- Extra flexible hose
- Protected electrics
- High quality dust cover
- Safety strainer
- Narrow pump design

EP1642

- With 12V d.c High Flow Pump
- **Compatible with Truma Ultraflow Filter and Truma Ultraflow Compact Housings**

Your Whale Watermaster® *with Easi-Press™* Plug Includes:

- Easi Press™ Plug
- High Flow Pump (EP1642)
- Extra flexible hose
- Protected electrics
- Protective plug cover
- High quality dust cover
- Safety strainer
- Narrow pump design
- Built-in hose holder

Plugs available to fit water sockets on leading UK caravan models.

Product Information

Model Specifications

	Watermaster® Exterior Pump Range
Weight	0.5 kg (1.06 lbs)
Fuse	5 amp Automotive
Materials	Pump Body: ABS, Seals: Nitrile®, Strainer: Polpropylene, Impeller: Stainless Steel / Unfilled PP, Cable: PVC, Grease Seal: Nitrile®, Wire: PVC insulated copper, Hose: PVC, Plug: PBT

Performance Data

Model Product Code Discharge Head	Flow Rate Per Minute / Current Draw High Flow EP1612, EP1622 & EP1642
0m (0 ft)	15.8 ltrs 3.8 amps
1m (3 ft)	14.8 ltrs 3.7 amps
3m (9 ft)	12.8 ltrs 3.5 amps

Please note: Pump performance may vary depending on the plumbing system and restrictions on outlets in your caravan

User Tips

Handy HoseHolder keeps hose clean while refilling Aquaroll

EP1612

EP1642

You may also like

Whale's in - line Water Filters see page 75

Whale® Tap Range see pages 64-71

NEW

See page 14 for New Watermaster IC Pump Controller for use with EP1612 pump and ES1001 / ES5001 Sockets

Tips

- To lubricate "O" ring and make connection of plug to socket easier, use a water-based lubricant such as silicone grease. Please note: Do not use vaseline to lubricate "O"ring
- The plug on EP1312/EP1612 incorporates a clip to hold hose and pump from the ground while not in use
- The plug on EP1622 incorporates an easy release mechanism to disengage plug from retaining wings - simply push in sides for easy release

Easy to retro-fit replacement sockets are available.

Whale Watermaster® Exterior Water Socket Range

Whale Watermaster® Exterior Socket (ES1000, ES1001, ES5000, ES5001, ES5002B)

NEW

Unique Socket Design

Clean Sleek Finish

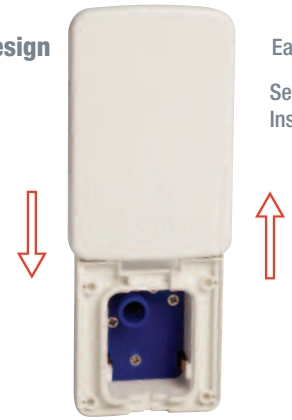

Easi-Slide™ Lid

Secure, Snap Fit Installation

Whale Watermaster® Exterior Socket with Easi—Slide™ Lid (ES8000, ES8005, ES9000)

Product Codes	Watermaster® Exterior Water Socket Range
ES1000	Whale® socket compatible with microswitch taps and AquaSmart® system for Submersible pump systems (ivory)
ES1001	Whale® socket with built in pressure switch (ivory) Watermaster® Socket Microswitch Service Kit AS5005 (see page 97) Watermaster® Service Kit AK8834 (see page 97)
ES5000	Whale® socket with Microswitch (white)
ES5001	Whale® socket with built in pressure switch (White)
ES5002B	Whale® socket for motorhome

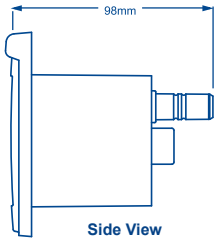

Side View

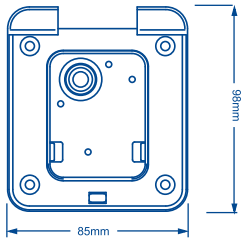

Front View

NEW

See page 14 for New Watermaster IC Pump Controller for use with EP1612 pump and ES1001 / ES5001 Sockets

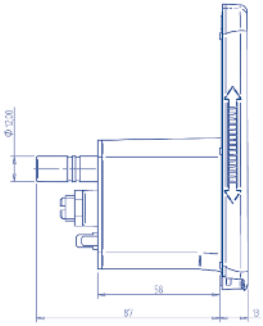

Side View

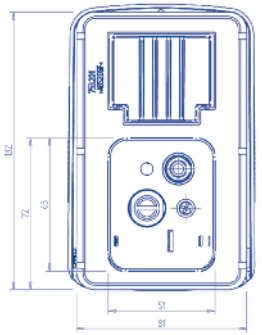

Front View

Meet The Designer
Andrew Peoples

Andrew collected user feedback to understand issues with the design of current water inlet sockets...The new socket addresses those core concerns...the sleek sliding socket is both easy to use and adds a stylish finishing touch to the van's wall.

Easy fit replacement lid kits allow you to replace lost / broken covers without replacing the entire socket

AK1400 Ivory Lid

AK1401 White Lid

AK1411 White Lid

AK1412 Silver Lid

Use Whale Watermaster with Easi - Push Plug and 12V d.c. High Flow Pump EP1612. See page 42.

Submersible Freshwater Pump Range

Higher Flow Rates and Greater Life

Compact, quiet, lightweight design suitable for use with pressure switch and microswitch systems. Ideal for use pumping from external water containers.

Standard Pump 10 ltrs/min - GP1002

- Simple, compact and an economical solution
- Ideal for basic, one outlet applications

High Flow Pump 16 ltrs/min - GP1652

- Market leading submersible pump for flow performance suitable for showering

Product Information

High Flow
Submersible Pump

1 Year Warranty

Standard
Submersible Pump

Product Information

Model Specifications

Model	Standard	High Flow
Voltage	12V d.c.	12V d.c.
Pump	Sub	Sub
Submersible Pump Old Model	GP8015	GP1652
Submersible Pump New Model	**GP1002**	**GP1652**
Fuse Size	5 amp automotive	5 amp automotive
Weight	0.15kg (0.3 lbs)	
Connection to Flexible Hose	10 mm bore hose	Suits 10 mm or 13 mm Bore Hose
Connection to 12 mm Quick Connect Plumbing	WU1211 (Stem Adaptor 11mm - 12 mm) see page 59	
Materials in Contact with Liquid	Pump Body: ABS, Seals: Nitrile®, Strainer: Polypropylene, Impeller: Unfilled PP	

Please note: New model codes are direct replacements for old model codes
Please note: Pump performance may vary depending on the plumbing system and restrictions on outlets in your caravan/motorhome.

Performance Data — Flow Rate Per Minute / Current Draw

Model	Standard 12V d.c.	High Flow 12V d.c.
Discharge Head	**GP1002**	**GP1652**
0 m (0ft)	10.3 ltrs 2.4 amps	15.8 ltrs 3.8 amps
1 m (3ft)	8.75 ltrs 2.2 amps	14.8 ltrs 3.7 amps
3 m (9ft)	5.75 ltrs 2.0 amps	12.8 ltrs 3.5 amps

Please note: Pump performance may vary depending on the plumbing system and restrictions on outlets in your caravan/motorhome.

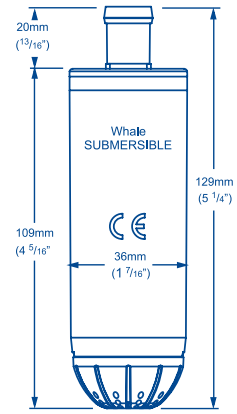

Front View

Highflow Submersible Pump

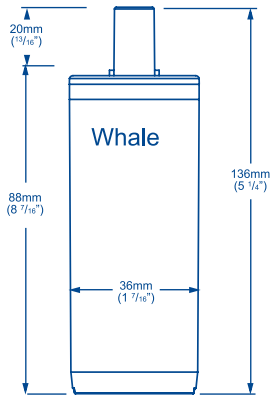

Front View

Standard Submersible Pump

Tips

For best performance:

- Maximum continuous operation should not exceed 15 minutes
- Do not run pump dry as it will cause pump damage
- Do not use to pump water that is over 60oc
- We recommend the pump stands vertically in the tank
- Before switching on, place the pump in water and shake for a few seconds to release trapped air. This will ensure successful priming and should be repeated after refilling the water tank
- Add an in-line pump into a system to boost water flow (see page 48)

In-Line Booster Pump

Boosts Flow in Manual or Electric Pump

- Simple, compact and low-cost pump
- Low power consumption and very quiet
- Ideal for two or three outlets
- Fits unsupported into pipework neatly
- Operates with a microswitched tap, pressure switch or with a separate switch
- Designed for use inline above a submersible electric pump (see pages 46) and a manual foot pump (see page 56-57)

Product Information

1 Year Warranty

Narrow design to fit neatly into pipework

Reliable watertight seal

Water flow

Model Specifications

Model	In-Line High Flow
Product Code	GP1692
Voltage	12 V d.c.
Recommended Fuse Size	5 amp automotive
Weight	0.15 kg (0.3 lbs)
Connections to Flexible Hose	Suitable for 10 mm (⅜") or 13 mm (½") Bore Hose
Connection to 12 mm Quick Connect Plumbing	WU1211 (Stem Adaptor 11mm - 12 mm) see page 59
Materials in Contact with with Liquid	Pump Body: ABS, Seal: Nitrile®, Impeller: Unfilled PP

Performance Data

Discharge Head	Flow Rate Per Minute Current Draw
0 m (0 ft)	15.75 ltrs 3.8 amps
1 m (3 ft)	14.75 ltrs 3.7 amps
3 m (9 ft)	12.75 ltrs 3.5 amps

Please note: Pump performance may vary depending on the plumbing system and restrictions on outlets in your caravan/motorhome.

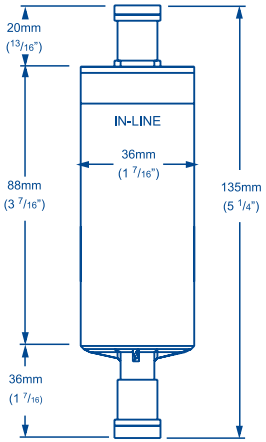

Front View

Tips For best performance install the pump in the suction pipe between the foot pump and the water tank, not between the foot pump and tap.

Underfloor 40L Fresh Water Tank

Maximises capacity while saving space with underfloor fitting

- Tri wall construction - Helps delay freezing
- Electronic control module - Monitors water level.
- Easy fill with float switch cut off
  - No water wasted when filling from outside Aquaroll
- Automatic float switch change over system
  - Switches to outside Aquaroll automatically
- Whale easy drain – hands off operation
  - Simply drained by lifting & rotating handle inside the vehicle

1 Year Warranty

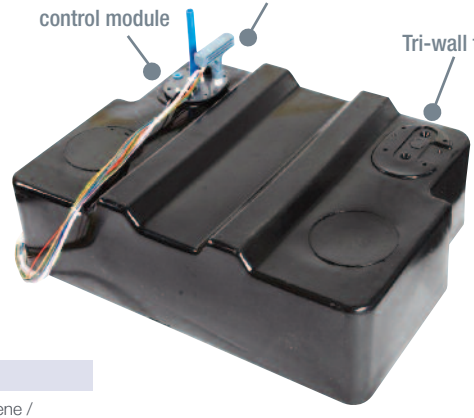

Model Specifications

Model	40L water tank	
Product Code	WT4100B	
Construction	Tri-wall	Polyethylene / Foam Polyethylene / Polyethylene
Capacity	38.5 ltrs	
Dry Weight	5.3kg	
Tank Chassis Support Bracket	3mm galvanized steel	
Control Module	Float Switch Body Easy Drain Handle Easy Drain Stem Level Sensor Housing	Polypropylene ABS Acetal Stainless steel
High Flow Submersible Pump	Optional Extra	(If internal pump not already fitted.)
Voltage	10V d.c. to 14.2V d.c.	
Nominal current Draw:	3.5 amps	
Max Operating Pressure:	1.2 bar	
Fuse:	5 amps automotive	
Pump body:	ABS	

Electronic Control Module

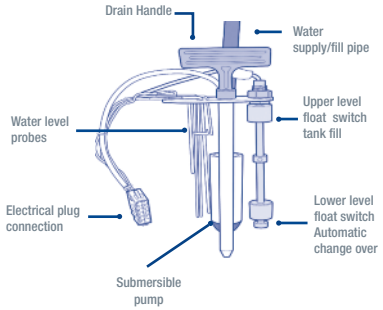

Please note: This product is available to vehicle manufacturers only, not available as a retail product

Watermaster Mains

COMING SOON

Now connects to all Whale sockets and Truma Ultraflow sockets

The Easy Connector from Tap to Van for Continous Water Supply

- No need to carry heavy water containers
- Allows a reliable continuous supply of water
- Delivers water without using battery power
- Suitable for use with caravans and motorhomes with either microswitch or pressure switch systems
- Regulates mains water pressure to nominal 1.5 bar (max. 1.8 bar)
- Ideal for use in UK and European Parks with mains water hook-up facilities
- Lay flat hose for easy storage

1 Year Warranty

Proven Performance for 20 Years

No Heavy Water Containers

Product Information

NEW

Included with EM9433

Plug adaptor to fit Truma Ultraflow Socket Housings EM9408

Plug adaptor available seperately for Truma Crystal II Sockets EM9407

Typical Installation

Model Specifications

Product Code	EM9433
Weight	0.9 kg (1.91 lbs)
Hose Connections	3/4'' bsp threaded
Hose Length	7.5m
Max. Mains Water Supply Pressure	8 bar (116 psi)
Accessories	7.5 m hose extension (EM9403) Adaptor for Truma Crystal II Socket (EM9407) Adaptor for Truma Ultraflow Socket (EM9408)

Tips

- Ensure your mains tap is turned off when not in use or when van is unattended
- Ensure Watermaster Mains Water Connection is kept in a clean dry storage area away from direct sunlight when not in use
- Can be used as a hose pipe by fitting the plug adaptor to the plug which will allow water to flow

Important

Please note: for safety reasons do not tamper with the Watermaster Mains Plug. Pressure is set at Whale® factory at nominal 1.5 bar (max 1.8 bar).

Portable Pump Kit

The Versatile Portable Pumping Solution!

The Versatile Self-Venting Portable Pump Kit now includes battery clips and a cigar lighter plug to make electrical connection even easier

- Great performance low voltage pump
- Easy to maintain with a wipe clean hose and nozzle
- Suitable for cold and warm water, diesel, light oils and water-based fluids including most water-based pesticides

The kit now includes

- Low voltage high flow submersible pump
- Nozzle with adjustable on / off, fine spray or a jet of water
- 3.75m (12.5 ft) food quality clear hose
- 3.75m (12.5 ft) cable with battery clips and cigar lighter connector

Can be used in a variety of applications

- Wash down for car, caravan, motorhome or boat
- Suitable for pumping diesel
- Showering, spraying and garden watering
- Storm water clearance
- Filling on board water tank

Typical Applications

Pumping Diesel

Wash down

Spraying

Filling on Board Tank

Model Specifications

Model	Self-Venting Portable Submersible Pump Kit
Product Code	GP1642
Voltage	12V d.c.
Fuse Size	5 amp Automotive
Power Connection	Crocodile Clips and Cigar Light Plug
Weight	0.70 kg
Materials	Stainless Steel, Nitrile®, PVC, Polypropylene, ABS

Performance Data

Discharge Head	Flow Rate and Current Draw
0m (0ft)	15.8 ltrs/min (3.8 amps)
3m (9ft)	12.8 ltrs/min (3.5 amps)

Tips

Before switching on, place the pump in water and shake for a few seconds to release trapped air. This will ensure successful priming.

Warning

Please note the Whale Portable Pump Kit is not suitable for petrol, low flash point liquids or aggressive chemicals. This pump must not be used for pumping petrol or any highly inflammable or corrosive liquids.

Superfil Pump Kit

The Easy Way to Fill Caravan / Motorhome In-board Water / Toilet Tanks from an External Water Supply

- Easy to use
- Compact for storage
- Reliable 13 ltrs/min flow rate submersible pump

Kit includes

- 12 V d.c. High Flow submersible pump
- 1.5m black hose and 1.38m cable
- Two pin plug and 12 V d.c. socket for installation
- Full step by step installation instructions

1 Year Warranty

Model Specifications

Model	Superfil
Product Code	**GP1332**
Voltage	12 V d.c.
Pump	Submersible
Fuse size	5 Amp Automotive
Weight	0.15 kg (0.3 lbs)
Materials in Contact with Liquid	Pump Body: ABS, Seals: Nitrile® Impeller: Stainless Steel, Hose:PVC and Polyprolene
Service Kit	Socket / Gasket (AS8092) See page 97

V Pump

Vertical Self-Priming Hand Pump

- Ideal where space is limited
- Suitable for pumping freshwater
- Angled spout and adjustable height provide various options for installation
- Capacity is 8 ltrs per minute
- Narrow mounting base allows installation between two sinks
- Delivers a smooth flow on each stroke up and down
- Ideal as a back up pump for electric freshwater systems

Product Information

Code: GP0650

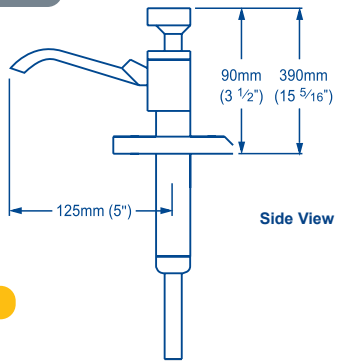

5 Year Warranty

Model Specifications

Model Product Code	V Pump GP0650
Hose Connections	Suitable for Quick Connect 15 mm plumbing and 13 mm (½") Flexible Hose
Weight	0.26 kg (0.6 lbs)
Materials	Pump Body: Acetal, Pump Barrel: Anodized Aluminium Alloy Seals: Neoprene, Nitrile®, Fasteners: Stainless Steel
Maximum Suction Lift	3 m (10 ft)
Maximum Discharge Head	4 m (13 ft)
Maximum Output per Minute	8 ltrs
Service Kit	AK0618 - Service Kit for V Pump, Mk 5, Mk 6, Mk 7 Models see page 97

Babyfoot® Pump

Self-Priming Compact Foot Operated Freshwater Pump

- Smooth and easy operation
- Easy to install compact design
- Ideal for installation where space is limited
- Angled design ensures more comfortable operation
- Ideal as a priming pump for use with Whale In-Line electric booster pumps (see page 48)
- Suitable for pumping freshwater and saltwater

Code: GP4618

5 Year Warranty

Product Information

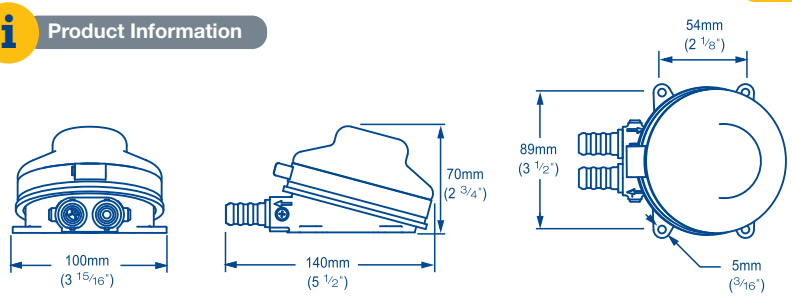

Model Specifications

Model Product Code	Babyfoot® GP4618
Hose Connections	Suitable for 13 mm (½") Flexible Hose
Weight	0.3 kg (0.7 lbs)
Materials	Pump Body: Nylon, Ports: Acetal, Seals: Neoprene Fasteners: Stainless Steel
Service Kit	AK4615 - Service Kit for Babyfoot® Pump See page 91
Maximum Suction Lift	1.5 m (5 ft)
Maximum Discharge Head	3 m (10 ft)
Maximum Output per Minute	8 ltrs

Quick Connect™ Plumbing System

Whale® Quick Connect™ fittings ensure a high integrity, reliable, plumbing system solution, specifically designed for use in mobile applications.

Save Time and Money by Using Whale® Quick Connect™

Fittings and pipework design ensures easy installation and re-usability of components.

The simple two step installation procedure does not require special tools to make a watertight connection.

Features and Benefits

- Unique 'Double Gripper' design provides secure lifelong pipework retention even at high pressures
- The innovative 'cage collet' eliminates leaks where fittings are installed close to tight bends
- Collet has internal support ring ensuring o ring seal is held in position and does not distort or leak under pressure
- High integrity single piece moulding ensures the strength of the fittings
- Outer sleeve incorporates collet cover, thus preventing accidental pipework release
- Collet clips are not necessary and therefore reduce installation time
- Pipework includes measured cut marks, designed to be a visual guide to ensure that fittings are pushed fully home

Equal Tee
WU1202

Equal Elbow
WU1203

Equal Straight
WU1204

End Plug
WU1208

Adaptor 11 – 12mm
WU1211

Tap Tail Adaptor ³/₈" BSP Male
WU1213

Adaptor ¹/₂" BSP Male
WU1214

Tank Fitting
WU1212

Stem Reducer 15–12mm
WU1215

Stem Elbow
WU1222

Adaptor ¹/₂" BSP Female
WU1232

Stem Adaptor ¹/₂" BSP-12mm Male
WU1264

Mounting Clip
WU1265

Stem Reducer 12 - 10mm
WU1210B

Shut Off Valve
WU1270

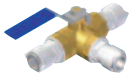

3 Way Valve
WU1271

Stem Tee
WU1205

Non-return valve
FV1300B

Stem Shut off valve
WU1272

Stem Adaptor ³/₈" Hose (For Elite Taps)
WU1280

Stem Adaptor ¹/₂" Hose 12mm (For Elite Taps)
WU1282

Adaptor 15-12mm
WU1512

Pipework 12mm Blue
30m WX7112
(For cold water)

Pipework 12mm Red
30m WX7114
(For hot water)

Pipework 15mm Blue
30m WX7152
(For cold water)

Pipework 15mm Red
30m WX7154
(For hot water)

WX7950
Pipework Cutters - must be used to cut Whale Semi-Rigid Pipework

Typical Whale® Plumbing Installation

Please note: This illustration is intended as a guide only and represents a typical caravan water and heating system installation. For advice on your specific installation contact Whale® support.

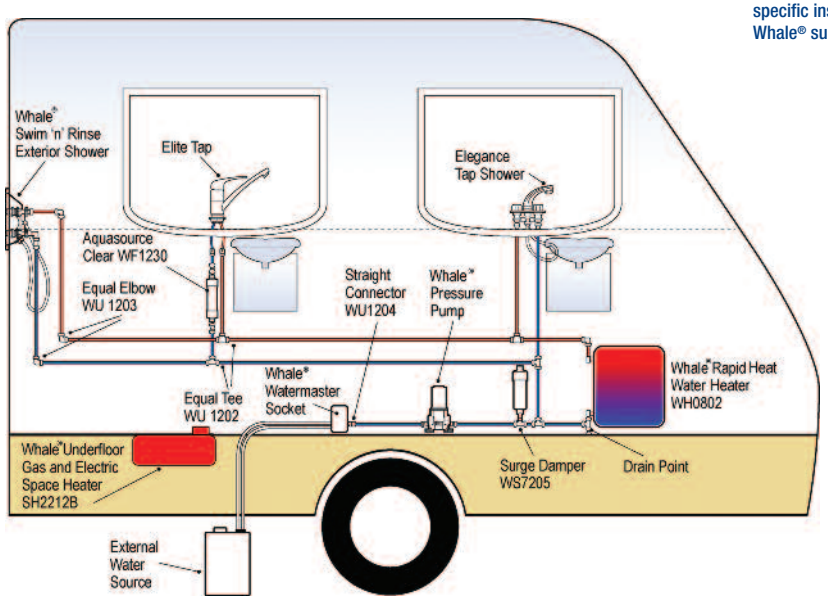

Whale® Quick Connect™ Semi-Rigid Pipework

Whale® Quick Connect™ colour coded semi-rigid pipework is available in 12 mm, Medium Density Polyethylene (MDPE). 15mm is also available in high performance (Whalex) material. The pipework's flexibility enables tight bends to be formed, hence reducing both the number of fittings and time required at installation.

Whale® Quick Connect™ semi-rigid pipework offers the integrity of metal, but the usability of plastic, and is fully tested and recommended for use with the complete range of Whale fittings.

Minimum Bend Radii Recommendations

All grades of Whale® Quick Connect™ semi-rigid pipework are flexible and can be bent into a tight radius to facilitate easy installations. This reduces the number of fittings required and the cost of the total water system.

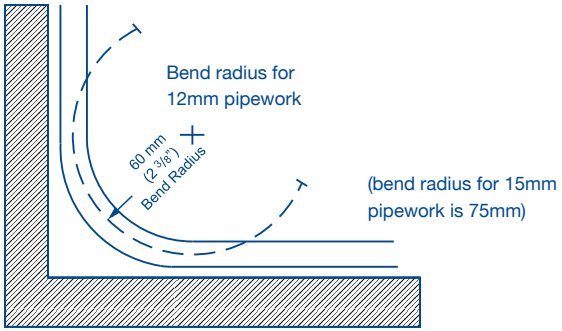

Installation Guide

Step 1 Cut pipework to length by making a straight clean cut using Whale cutters WX7950 (see **fig.1**)

Step 2 Simply push the pipework length into the fitting to the second internal stop (see **fig. 2**)

Step 3 To release pipework: Push back the grey collet into the fitting, then hold the collet in and pull out the pipework length (see **fig. 3 and 4**)

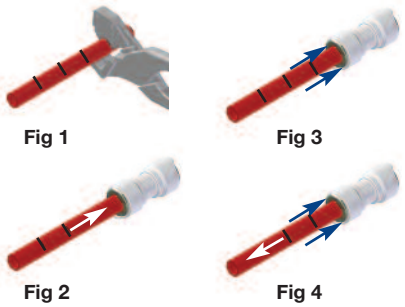

Please note: Do not lubricate the end of the tubing with silicone

Temperature Settings

WARNING: To prevent scalding, (regardless of the water heating method or the control devices used), the temperature for the hot water supplied to the taps and showers should be controlled in the range of 43 ºC to 60 ºC

(110 º F to 140 º F) with a fail safe set at 82 ºC (180 ºF).

CAUTION: Ideally, the temperature should be set at 46 ºC (115 ºF) for health and safety reasons, higher settings will increase the risk of scald injury. Those at greatest risk of scald injury include children, the elderly, disabled, and diabetics.

Minimum Storage Temperature

The minimum dry storage temperature is -40 ºC (-40 ºF)

Please note: It is vital that the system is fully winterised to prevent frost damage.
See our guide to getting ready for winter on page ??

Taps and Showers

- High quality lightweight taps and showers.
- Modern stylish designs.
- Range includes metal or plastic models for micro-switched or pressure switch water systems.

Elite Shower Range

Single Lever Showers

- Easy to operate single lever action allows precise flow and temperature control
- Simple to install with a single round hole mounting
- Lightweight and easily plumbed
- 12 mm Quick Connect plumbing connections built-in
- For use in pressure switch and microswitch systems (with replaceable microswitch)
- Ideal for installation where space is limited
- Retrofits to Whale Elegance taps by using mounting plate

Swivel handle allows you to adjust temperate and flow

Light Weight

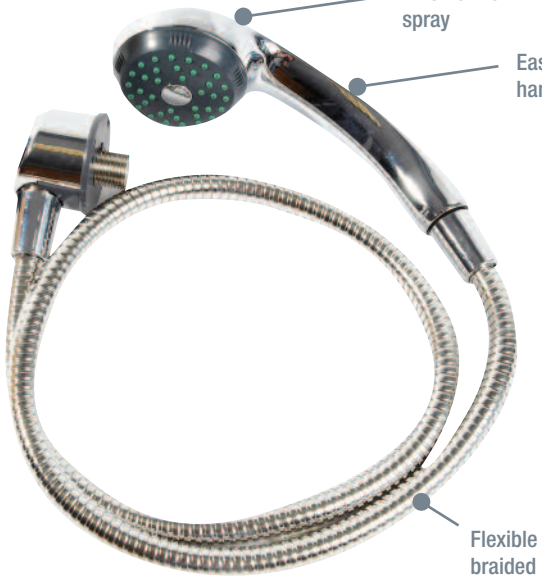

Code: MT0140B / MT0144B

1 Year Warranty

Model Specifications

Model	Shower
Colour	Chrome and Diamond White
Product Code (With Microswitch)	MT0140B
Product Code (Without Microswitch)	MT0144B
Connect to Quick Connect 15 mm Plumbing	WU1215 or WU1512 - Adaptor 15 mm-12 mm
Connect to 10 mm (3/8") Flexible Hose	WU1280 - Stem Adaptor 3/8" Hose
Connect to 13 mm (1/2") Flexible Hose	WU1282 - Stem Adaptor 1/2" Hose
Hose Length	1.25 m (4 1/8 ft)
Service Kit	See page 97

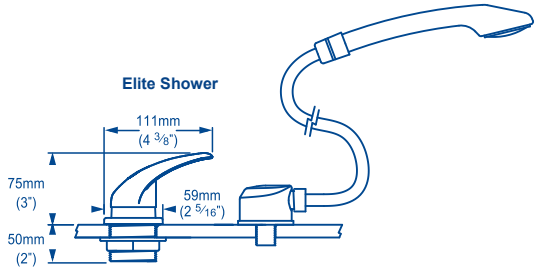

Please note: These taps are intended for use in freshwater systems in recreational vessels / vehicles only.

Elegance Tap Range

Ideal for use with Pressure Switch or Microswitch Systems

- Easy installation
- Ideal where installation space is limited
- Connects directly to Whale Quick Connect 12 mm plumbing
- Full range of mixer and cold only taps
- For systems operating at up to 2.4 bar (35 psi)
- Mixer tap standard outlet comes with combined tap and shower outlet (see page 69)

Model Specifications

Model	RT1010	RT1210	RT2010	RT2210	RT2007
Description	Single Tap Cold Only		Mixer Tap Standard Outlet		Mixer Tap Long Outlet
Colour	White				
Hose Connections	12 mm	½" Threaded	12 mm	½" Threaded	12 mm
Materials in Contact With Fluid	Body: ABS, Spout and Valves: Acetal, Seals: Neoprene				
Base Plate (mm)	113 x 55 (4 7/16" x 2 1/8")	113 x 55 (4 7/16" x 2 1/8")	164 x 55 (6 7/16" x 2 1/8")	171 x 62 (6 3/4" x 3 5/8")	164 x 55 (6 7/16" x 2 1/8")
Depth Beneath Surface	92 mm (3 1/5")	60 mm (2 3/8")	92 mm (3 5/8")	60 mm (2 3/8")	92 mm (3 5/8")
Connection to Quick Connect 15 mm	WU1512	WX1532	WU1512	WX1532	WU1512
Connection to 10 mm (3/8") Flexible Hose	WU1280 WU1204	Not Applicable	WU1280 WU1204	Not Applicable	WU1280 WU1204
Connection to 13 mm (1/2") Flexible Hose	WU1282 WU1204	WX1532 WX1584	WU1282 WU1204	WX1532 WX1584	WU1282 WU1204
Service Kits	RT9000 Micoswitch Service Kit see page 97				

Mixer Tap Long Outlet

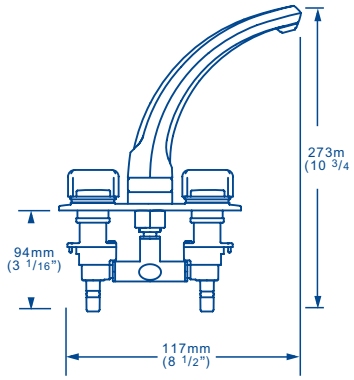

Front View

Tips For guide on winterisation see page 81

Ideal for

Use with Pressure Switch or Microswitch Systems

Please note: These taps are intended for use in freshwater systems in recreational vessels / vehicles only.

Elegance Combination Mixer Shower Unit

Combined Model with Tap and Shower Functions

- Ideal where shower installation space is at a premium
- Retractable hose makes for neat storage when shower is not in use
- Water flow can be temporarily shut off at shower head to maintain mix setting
- One unit can be used as either a worktop mounted tap or a 'pull up style' shower
- 1.7 m (5' 7") long hose
- Connects directly to Whale Quick Connect 12 mm plumbing
- For systems operating at up to 2.4 bar (35 psi)

See Table on page 69 for Model Number
Mixer Tap
Standard Outlet
Combination Mixer Shower
1 Year Warranty

1 Year Warranty

Easy pullout shower

Code: RT2500
Combination Mixer Shower Unit
1 Year Warranty

2 products in 1

Light Weight

Model Specifications

Model	RT2500	RT1470	RT2498
Description	Mixer Combination Tap / Shower with Wall Bracket	Cold Only Combination Tap / Shower	Mixer Combination Tap / Shower
Colour	White		
Hose Connections	12 mm	½" Threaded	½" Threaded
Base Plate (mm)	164 x 55 (6 7/16" x 2 1/8")	164 x 55 (6 7/16" x 2 1/8")	171 x 62 (6 3/4" x 3 5/8")
Depth Beneath Surface	108 mm (4 1/4")	80 mm (3 1/8")	80 mm (3 1/8")
Connection to Quick Connect 15 mm	WX1512	WX1532	WX1532
Connection to 10 mm (3/8") Flexible Hose	WU1280 WU1204	Not Applicable	Not Applicable
Connection to 13 mm (1/2") Flexible Hose	WU1282 WU1204	WX1532 WX1584	WX1532 WX1584
Service Kits	See page 91-92		

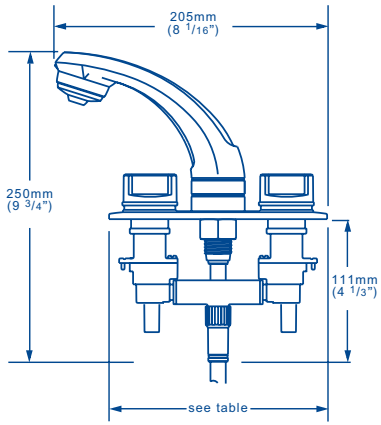

RT2500
Combination Mixer Shower

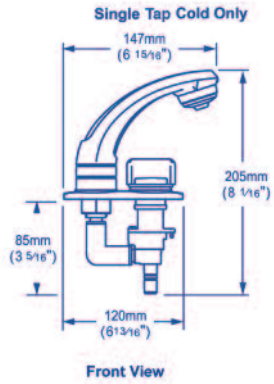

Please note: These taps are intended for use in freshwater systems in recreational vessels / vehicles only.

Swim ‘n’ Rinse External Shower

Mixer Shower Designed For External Use

- For easy washdown outside the motor home
- Handset design allows water to be set to the desired temperature and closed minimising water wasted
- Hinged cover provides a neat finish to the unit (lockable cover version also available)
- Connects directly to Whale Quick Connect 15 mm plumbing see page 59
- Mounting hole 125 mm (4 15/16") X 250 mm (9 7/8")

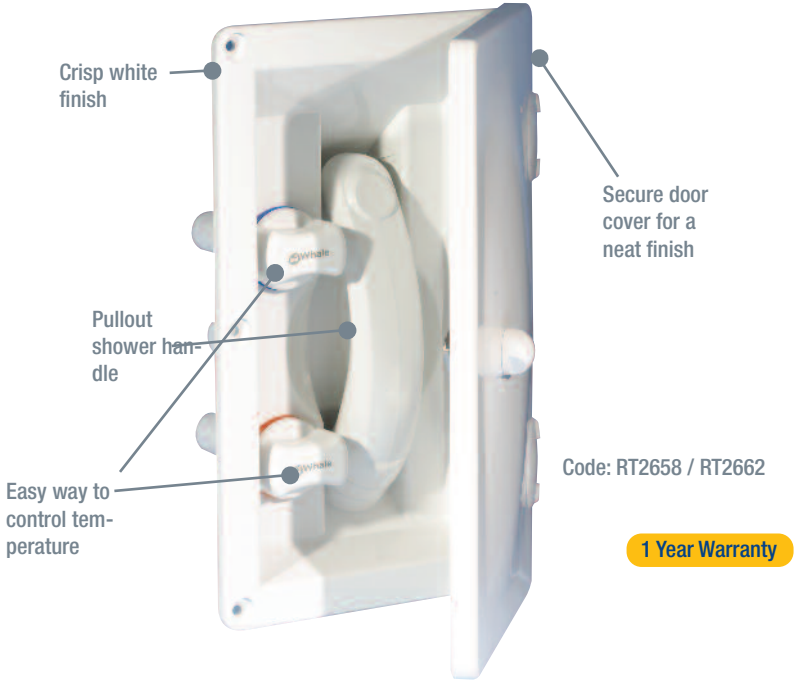

Product Information

Model Specifications

Model	Cold Only (no cover)	Cold Only (cover included)	Hot and Cold Mixer (no cover)	Hot and Cold Mixer (lockable cover included)
Product Code	RT1648	RT1649	RT2648	RT2662
Colour	White			
Base Plate	167 mm (6 ½") X 292 mm (11 ½")			
Depth Beneath Surface	88 mm (3 ½")			
Hose Connections	½" Male Threaded (BSP / NPT)			
Connection to Quick Connect 15 mm Plumbing	WX1532 - Adaptor Female ½" – 15 mm			
Hose Length	2.1 m (7 ft)			
Service Kits	AS5123 Combo handset white – AS5122 Tap / Shower Upgrade (see page 97)			

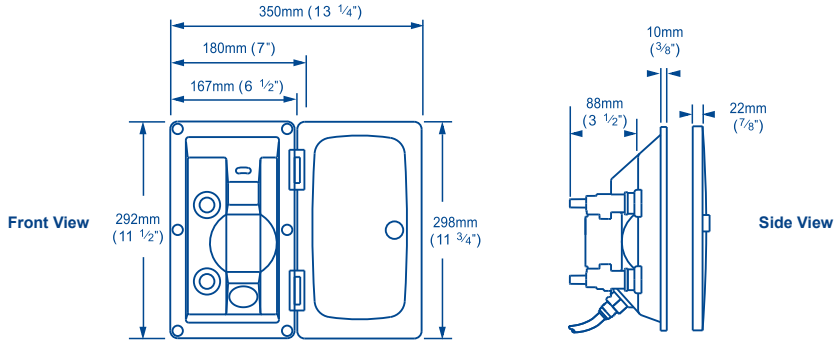

Tips For guide on winterisation see page 81

Ideal for

Use with Pressure Switch or Microswitch Systems

Please note: These taps are intended for use in freshwater systems in recreational vessels / vehicles only.

Water System Accessories

Complete your water system with high quality Whale® accessories.

Fit Whale® throughout your van's water system for a reliable constant smooth water supply.

In-Line Pressure Switch

Allows Regulation of the Pressure in your Water System

- Adjustable cut in / cut out pressure setting
- Suitable for installation into 12mm Whale Quick Connect or 1/2" flexible hose systems
- Controls the pump turning it on and off by sensing changes in water system pressure
- Recommended for use with Whale submersible and in-line booster pumps (see pages 46-48)

1 Year Warranty

Code: WU7207

Product Information

Model Specifications

Model	**Pressure Switch**
Product Code	**WU7207**
Weight	0.063 kg (0.14 lbs)
Hose Connections	Suitable for Whale Quick Connect 12 mm and 10 mm (3/8") Flexible Hose
Current Rating	10 amp: 12 V d.c. systems 5 amp: 24 V d.c. systems
Maximum Pressure	2 bar (30 psi)
Materials	Body: Acetal, Seals and Valves: Nitrile®, EPDM Spring: Phosphor Bronze, Fasteners: Stainless Steel
Service Kits	AK7208 - See page 97

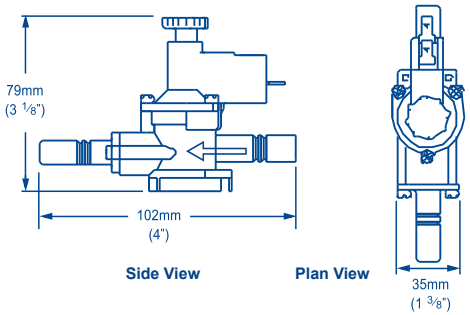

Tips

For guide on adjusting see page 86

- Direction of arrow indicates the direction the water should flow
- Pressure Switch must be set when running on battery power (12V d.c.)

Aquasource Clear Water Filter

For That Refreshing Taste

- Removes unpleasant tastes and smells from water from in board tanks
- Simple installation (free clips included)
- Silverised carbon filter
- Maintenance-free design
- Can be mounted vertically or horizontally
- Suitable for use with Whale Quick Connect and flexible pipework
- Lasts one full season or 4500 litres
- Installed in the freshwater plumbing pipework - usually under the sink see page 60
- Slimline design fits easily into pipework under sink

1 Year Warranty

Code: WF1230 / WF1530

Product Information

Model Specifications

Product Code	Pipe System Used	Fitting Required
WF1230	Quick Connect 12 mm	Connects Directly Using Whale Quick Connect 12 mm Fittings
WF1530	Quick Connect 15 mm	Connects Directly Using Whale Quick Connect 15 mm Fittings
WF1230	10 mm (⅜") Flexible Hose	Stainless Steel Hose Clips
WF1530	13 mm (½") Flexible Hose	Stainless Steel Hose Clips
Maximum Pressure	4 bar (60 psi)	

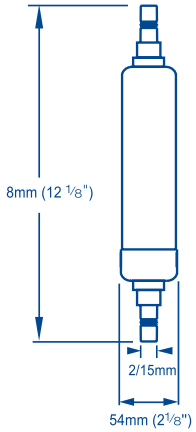

Tips For guide to drain the filter for winterisation see page 81

Please note: This is NOT a bacterial filter

AquaSmart® Water Filter

Removes unpleasant tastes and smells from water

- Simply lift out of water container and twist off / on to replace
- 3000 litres of filtered water
- Silverised carbon filter

1 Year Warranty

Code: WF3000

Product Information

Typical Installation

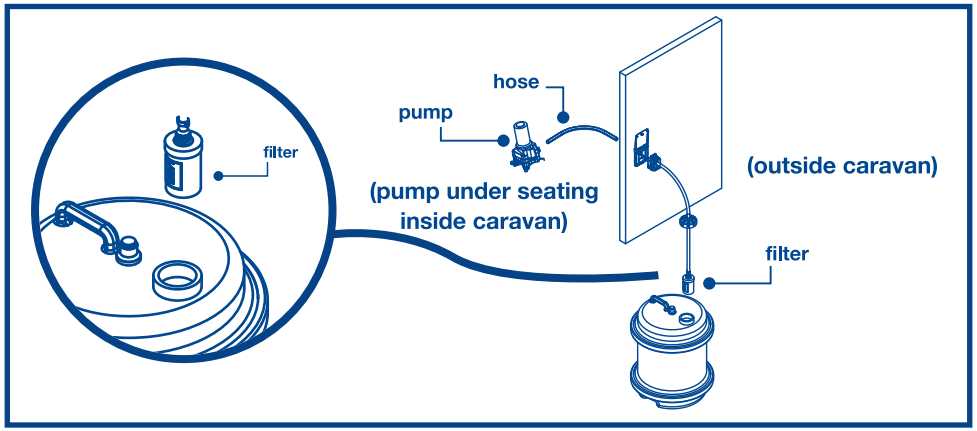

Tips

- It is recommended that you change your AquaSmart® water filter every 3000 litres or after approx 30 days of use as smells and debris will build up in the filter and effect the pump's performance
- Allow filter to sink to bottom of water container before use

Easy change filter

Please note: This is NOT a bacterial filter

Surge Damper

Smoothes Water Flow

- Helps reduce noise and pulsations in the water system
- Protects the pressure switch in pressurised systems
- Suitable for installation into soft hose system
- Supplied complete with mounting clips
- Designed to be mounted in a vertical position
- Connects directly in-line to Whale Quick Connect Plumbing
- For typical installation see page 60

1 Year Warranty

Code: WS7205

Product Information

Model Specifications

Product Code	Pipe System Used	Fitting Required
WS7205	Quick Connect 12 mm	Connects Directly Using Whale Quick Connect 12 mm Fittings
	10 mm (⅜") Flexible Hose	Stainless Steel Hose Clips

Capacity	150 ml (¼ pint)
Maximum Pressure	4 bar (60 psi)

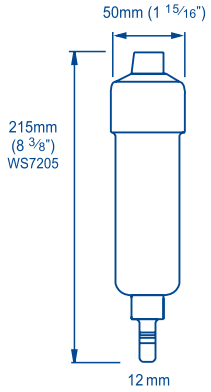

Front View

Tips

Install as close to the outlet of the pump as possible or as close to the outlet side of the pressure switch (WU7207). See page 60.

One Way Valves

Help Maintain Prime in Manual or Electric Systems

- Available in Plastic and Chromed Brass
- Ideal for use with electric submersible pumps (see page 44)

Code: FV1227

Code: FV1235

1 Year Warranty

Product Information

Model Specifications

Product Code	FV1227	FV1235
Hose Connections	Suitable for 13 mm (½") Flexible Hose	
Materials	Body: ABS / Chromed Brass, Spring: Phosphor Bronze, Seal: Nitrile®	
Weight	0.04 kg (0.9 lbs)	0.22 kg (0.5 lbs)

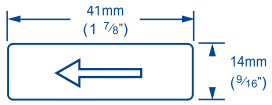

FV1227
Side View

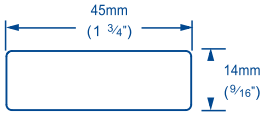

FV1235
Side View

Tips

- Ensure the valve is installed with the arrow pointing in the direction of the water flow
- The one way valve is for maintaining prime over short periods of time.

The low restriction design will have a small drip return.

Electric Solenoid Valve

Solenoid Valve used for Controlling Potable Water

- Ideal for redirecting water flow for on-board tank filling
- Can be connected to existing 12 mm plumbing
- Fitted with 12 mm Whale Quick Connect fittings for direct connection
- Valves remains closed until 12 V d.c. is applied

1 Year Warranty

Code: WU1273

Product Information

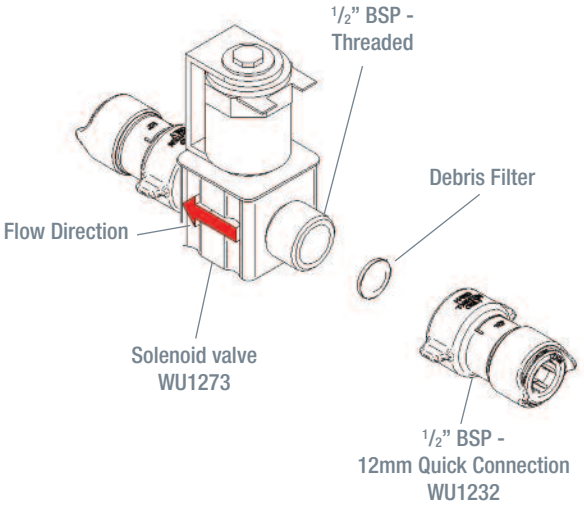

Tips

When installing the solenoid with a float switch for automatic tank filling cut off,

we recommend that a relay is used to ensure that the solenoid current draw does not damage the float switch.

WARNING: During operation the solenoid coil can become hot. Do not leave activated for extented periods of time (more than 15 mins) since the solenoid coil will become hot and unnecessary battery drain may occur.

Whale® Help You Go Caravanning and Motorhoming

- Hints and tips to help you get ready for the season and prepare for winter.
- Extra tips to get the best from your Whale products.

We are here to assist you, contact Whale® Support today

For Water Enquiries

Tel: 028 9127 0531

Email: info@whalepumps.com

For Heater and i Van® Enquiries

Tel: 0845 217 2933

Email: ivan@whalepumps.com

Pre-Season Water System Preparation

Follow this guide to prepare your leisure vehicle for the new season

Why should I follow this Guide?
Over the winter months bacteria can grow in your water system. Particles of minerals and dirt gather in joins and any undrained areas. To check the system hasn't suffered any frost damage over the winter and floods your van.

After following this guide, change your water filter
If you have a Whale AquaSmart system, change your Whale WF3000 Water Filter.
If you have an in line filter in your plumbing system, Whale recommend you your plumbing system, Whale recommend you use **WF1230 Aquasource Water Filter.**

Close all drain valves in your van's water system.

Re-attach your shower head.

Ensure all taps and showers are positioned over sinks and drains.

Check condition of leisure battery, if it is below 12V please connect to mains electricity supply.

M'HOME Rinse out fresh and waste water tanks with water, add a non-caustic cleaning and purifying agent
C'VAN Add a non-caustic cleaning and purifying agent to the fresh water tank.

Completely fill your fresh water tank with tap water.

Leave the hot tap that is furthest away from the water heater fully open, close all remaining taps and showers.

Turn on isolation switch for water pump, normally found on the control panel or in a menu within the control panel's software.

You should hear the pump running or the pressure coming from the open hot tap.

Water will pop and splash as it comes from the hot tap, it will take some time for a flow of water to arrive as the water heater needs to fill up first.

Once an even flow is achieved, work back towards the water heater, opening the next furthest away hot tap until all have been opened and there is a smooth water flow.

The next stage is to close all hot water taps and open the cold water taps in the same order as the hot taps, beginning at the furthest away cold tap.

When an even flow is achieved through all the taps in your van close all the taps.
The pump should turn off (after a few seconds if it is a pressurised system).

Remain in your van after the pump has stopped and inspect all the taps and shower heads for leaks.
You may need to dry them down first to spot any leaks). If there is access to the underside of the taps check for water leaks.
Have you found a water leak?

NO

While checking the taps and showers you may hear the pump turn on and off a few times.
If you hear this, turn on and off all the taps for 10 seconds individually to remove any trapped air from the system.

YES

If there is a water leak coming from the connections on the underside of the tap try to push them home or tighten them with a spanner depending on the connections.
If the leak originates from a crack or an unknown source check the rest of the taps and showers before turning off the water pump.
Then drain the water system as the water pressure will continue to escape through the leak and will cause water damage to your van.
Contact your local dealer to rectify the leak(s).

If the pump continues to run intermittently for short bursts this can indicate a leak as pressure is being lost,
Follow all the water pipes and check if there is any water leaking from joints or if a pipe is burst.

Should you find a leak at a joint, tighten the joint or push the pipe fully into the Quickfit fitting to dry up the water and wait to see if the problem persists

If you find a burst pipe or damaged tap/shower we recommend that you contact your nearest Caravan/Motorhome dealer.

After the cleaning agent has remained in the system for the required time, purge the system by running 2 or 3 full tanks of water through the system using all taps and showers in the mixed position.

Change your filter.

Finally your system is ready for use.

If you have successfully carried out this guide please check your water heater is functioning correctly, to do this please follow the manufacturers instructions.
Enjoy the new season.

Note: These pre-season tips are intended as a general guide only. For servicing and product advice for your specific vehicle, contact Whale Support:
Tel: +44 (0)28 9127 0531 Fax: +44 (0)28 9146 6421
Email: info@whalepumps.com

Getting Ready for the Winter

Follow this guide to prepare your leisure vehicle for winter

Do you own a Caravan or Motorhome?
Ensuring that all water is removed from the caravan/ motorhome's pipework, taps and appliances will reduce the risk of frost damage occurring. Frost damage can occur when water left in the system freezes and expands, causing pipework and appliances to split, crack or burst.

Ideally position caravan/motorhome so the drain valves are at the lowest point i.e. tilt the caravan/motorhome or park on a slope.

Turn the pump off.

Open all taps/mixers in the mid position, including the external shower (if fitted).

Remove shower handset (including the external shower, if fitted) and shake water out.

Open water heater drain valve and leave open.

Open on board tank drain valve (if present) and leave open.

Where grey waste tanks are fitted, remove all sink plugs and open the drain tap.

Open any other drain points (if present).

External water components - shake water out of pump/AquaSource/AquaSmart filter assembly and store inside the van.

Internal pump - turn on and allow to run to expel additional water for 2 minutes.

If internal pump is accessible disconnect outlet pipe and turn on pump to purge water into an adequate basin. Only reconnect pump when water system is to be used.

Before following this guide, ideally carry out this procedure prior to moving the caravan /motorhome to its winter storage location. (The movement of the vehicle will encourage residual water to drain from the system).

USER TIP
If mains electric hook up is available and a Whale Space Heater is fitted select 500w electric (~) and set temperature to frost protection.

USER TIP
Fully drain /empty holding tank and flush tank of toilet in accordance with the manufacturer's instructions.

USER TIP
Ensure the gas is turned off at the bottle.

USER TIP
Do not close the fridge door tightly, leave ajar to prevent mildew forming.

USER TIP
To maintain the battery periodically charge throughout the winter.

*Please note: Where 'wet' heating systems are fitted, please refer to the manufacturer's instructions for winterising. These winterising tips are intended as a general guide only.
For servicing and product advice for your specific vehicle, please contact Whale Customer Support:

Tel: +44 (0)28 9127 0531 Fax: +44 (0)28 9146 6421
Email: info@whalepumps.com www.whalepumps.com

Please note: this winterising information is intended as a general guide only.
For servicing and product advice for your specific vehicle contact Whale Support
tel: +44 (0)28 9127 0531 fax: +44 (0)28 9146 6421 email: info@whalepumps.com

Adjusting your Pressure Switch

Your pressure switch is factory set and should not normally require adjustment. However, adjustment may be required if the power supply voltage has varied from the previous setting, either due to battery drainage or higher voltage being supplied when the battery charger is operating. In the event that your pump doesn't switch off when you close the taps, or it pulses on and off rapidly when the taps are fully open, follow these guidelines to re-adjust the pressure switch setting.

Which Pressure Switch do you have?

In-Line Pressure Switch
Internally located within the water system pipework

Pressure Switch

Integral Pressure Switch
Located on the back of the water inlet socket

Locking Nut

Pressure Switch

Pressure Switch Setting

Ensure the system, including the heater is full of water and all taps are closed. Refer to your user manual.

Tighten the adjusting screw clockwise until the pump comes on.
(For integral socket based pressure switches, first loosen the pressure switch locknut in an anti-clockwise direction.)

Open any tap until you have a smooth flow of water, then close the tap.
You should hear the pump running and the pump running light if fitted will be on.

Return to the pressure switch and turn the pressure switch adjustment screw slowly anti-clockwise until the pump has stopped.
Turn the screw a further half turn (180 degrees) anti-clockwise.

Check for correct operation by opening and closing all taps individually. The pump should turn on when the cold tap is opened and switch off immediately when the cold tap is closed. NB. There will normally be some pulsations at low flows.

The hot side may take about 10 seconds to react (both on and off) due to cushioning effect in the water heater.

For integral socket based pressure switches, carefully tighten carefully tighten the locknut until it is tight keeping the adjustment screw in position.

THREE GOLDEN RULES:
1. NEVER allow the pump to run dry
2. NEVER allow the pump to run continuously for more than 15 minutes
3. The pump assembly MUST be unplugged BEFORE putting the pump back into the refilled water container.

If setting of the pressure switch is still not correct you may experience:

Pump running continuously, even with tap closed. If undiscovered, could result in pump failure and flat battery. Most likely causes are that present voltage is significantly lower when last adjusted, or water container is empty. **CURE: Re-adjust switch or refill container**

Pump does not run at all. If not due to blown fuse or faulty connections, then most likely cause is excessive continuous running (see above)
CURE: Replace pump and re-adjust switch

Pump runs intermittently ON, OFF, ON, OFF etc. Seen as pulsing flow from tap, or as inability to set constant water temperature, water goes hot, cold, hot, cold instead of constant warm. Most likely cause is that present voltage is significantly higher than when last adjusted.
CURE: Re-adjust pressure switch, if problem persists add a Whale Surge Damper (WS7205).

Pump runs very noisily but does not pump water. Likely to occur after water container has been refilled.
Pump is air- locked and is fightingto get air out and water in.
CURE: Unplug from the socket, allowing pump to flood, and reconnect by plugging in again.
The correct sequence when refilling the container is to unplug, put pump into container, then reconnect.

Pump continues to run for up to 30 seconds after tap is turned off. This is not a problem. This is a characteristic of pressure switch systems caused by the dampening effect of the hot water heater or surge damper on the cold side.

If after following these procedures the system continues to pulse when all taps are closed there may be a leak in the system.
Please contact Whale Support for further guidance.

Please note: this Pressure Switch information is intended as a general guide only.
For servicing and product advice for your specific vehicle contact Whale Support
tel: +44 (0)28 9127 0531 fax: +44 (0)28 9146 6421 email: info@whalepumps.com

Never adjust your pressure switch again! NEW Watermaster IC Pump Controller page 14

On Board Pump Guide

WINTERISING

If water is allowed to freeze in the system, it can expand causing pipework and appliances to split, crack or burst. To best avoid this damage, completely drain the water system using the guideline below. Ideally carry out this procedure prior to moving the caravan / motorhome to its winter location. The movement of the vehicle will encourage residual water to drain from the system.

Ideally position the caravan/motorhome so the drain valves are at the lowest point i.e. tilt the caravan/motorhome or park on a slope.

Turn the pump off, open all taps/mixers in the mid position, including the external shower (if fitted)

Remove shower handset (including the external shower, if fitted) and shake water out.

Position manual valve handles as shown below:

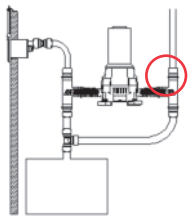

Open the water heater and on board tank drain valve (if present) and leave open.

Where grey waste tanks are fitted, remove all sink plugs and open any other drain points (if present), and leave open.

External water components – shake water out of pump/AquaSource/AquaSmart filter assembly and store inside the van.

Internal pump – turn on and allow to run to expel additional water for 2 minutes.

User Tip If internal pump is accessible, disconnect outlet pipe and turn on pump to purge water into an adequate basin. Only reconnect the pump with water system is to be used.

Continues overleaf >

On Board Pump Guide

VIBRATIONS

Higher powered onboard pumps naturally tend to be more noisy than smaller, external pumps. However, some steps can be taken to minimise this, as follows:

Regularly replace the submersible carbon filter (WF3000) at least twice a season, as excessive restrictions in the system can cause the pump to work harder.

Air in the system can cause additional noise. Refill the water tank regularly to avoid pumping air through the system, and ensure the o-rings and joints on the suction side of the system are in good condition

Ensure pipework does not vibrate against the floor or walls by moving it clear. Grey pipe insulation can sometimes be used to achieve this.

Earlier pumps where fitted with black (hard) rubber feet, grey (softer) feet which absorb the vibrations more effectively, are available as a replacement free of charge. Please contact Whale Support for details.

PRIMING YOUR SYSTEM

To maximise the performance of your pump, follow these guidelines of how to re-prime your pump every time the water supply is reconnected:

Open one hot tap (e.g kitchen sink).

Place AquaSmart carbon filter (WF3000) into the water container.

Insert plug into wall socket and close lid to lock plug in place.

Switch on 12v d.c. supply to pump

When water is flowing smoothly close hot tap and open cold tap to expel remaining air.

Repeat for all other hot and cold taps.

User Tip It is important that the o-rings on the suction side of the pump are kept in good condition and well lubricated. This will make the connection of the plug to socket easier, and will help keep the water system in good working order. To lubricate the o-rings, use a water-based lubricant such as silicone grease. DO NOT use Vaseline or cooking oil, as this will corrode the rubber.

Please note: these tips are intended as a general guide only. For servicing and product advice for your specific vehicle contact Whale Support
tel: +44 (0)28 9127 0531 fax: +44 (0)28 9146 6421
email: info@whalepumps.com

NEW Watermaster on board - Whale's latest water pump page 40

Fault	Cause	Solution
Pump does not run	*No power to pump*	*Check power supply* *Attach leads/clean connections*
Fuse has blown	*Replace fuse-Do not exceed recommended fuse size of 5*	*Amp automotive*
	Blockage in pipework	*Check pipework for kinks*
Pump runs but no water appears	*No water getting to pump*	*Check that water tank is not empty* *Check strainer is not blocked* *Check all connections from tank to inlet of pump are secure - any air leaks will prevent prim*
Water leaking at outlet side of pump	*Check pipework /fittings for leaks and repair*	*Pump runs but will not switch off*
	Water leaking at outlet side of pump	*Check pipework /fittings for leaks and repair* *Check system drain plugs are closed*
	No water	*Check water supply level*
Pump cycles on and off periodically when all taps are closed. (Normal with a partially opened tap)	*Water leaking at outlet side of pump*	*Check pipework/fittings for leaks and repair Check system drain plugs are closed*
	Leak Back	*Possibly caused by dirt particles in the valves. This may be cleared by flushing through with clean water. Alternatively, the pump head can be disassembled and the valves carefully cleaned.* *Pump cycles on and off excessively when tap/s are open*
	Excessive back pressure	*Check pipework for kinks and filters etc are clear* *Check shower rose/taps for blockage and repair*
Noisy Operation	*Pump drawing air*	*See cause 'No water getting to pump' (see above)*
	Noise created by vibration	*See overleaf*
Low flow	*Bore of pipework connection too small*	*8.5 mm minimum bore recommended* *Check for kinks in pipework* *Check pipework is not blocked*
Power supply to the pump	**Check power supply to pump uses correct gaugewire (2.5mm2/AWG 13) to give full voltage at pump* *Check battery is not discharged*	
Pipework /connections crushed	*Replace damaged connections due to overtightened jubilee*	*clips*
Pump too far from water tank	*Pump should be situated beside water tank*	
	Water leaking at outlet side of pump	*Check pipework/fittings for leaks and repair Check system drain plugs are closed*
	Pump strainer clogged	*Remove clear lid, rinse and replace to main strainer body (retain strainer mesh to lid)*

Continues overleaf >

On Board Pump Guide Servicing

On Board Pressure pumps are robust products that experience few failures. Most problems that occur can be cured by following the trouble shooting instructions below which may help you diagnose the fault and provide a solution:

Tips

Using and Changing Your Water Filter (WF3000)

It is recommended that you replace your water filter twice a season, after 30 days of continuous use or 3000 litres of water.

Simply twist off to change the filter. When fitting your filter to your water inlet socket the carbon container should always be placed into the water before pushing connection into the socket. This minimizes the risk of trapped air when fitting.

After fitting a new filter, elements of carbon may appear in your water, run a generous amount of water through the system until the water runs clear.

Tips

User Tip Service Kits

There are three serviceable components for the Smartflo® and Watermaster® On Board Pump

1. AK1318 - Full Head Assembly Replacement
2. AK1317 – Microswitch Replacement
3. AK1320 – Inlet Strainer Replacement

Calibration Quick Guide for Watermaster® IC

Space Heater Fault Finding

Water Heater Fault Finding

i Van® Options Guide

NEW Watermaster® IC Pump Controller

5 easy steps to calibrate your Watermaster® IC Pump Controller.

IC Intelligent Control*

STEP 1

Press and hold the calibration button until the green LED starts to flash after 1-3 seconds

STEP 2

Open the cold shower and the pump should start (there may be a short delay).

STEP 3

After approximately 30 seconds, turn off the shower.

STEP 4

After approximately 10 seconds (the pump should still be running), press and hold the calibration button again until the LED turns solid green and the pump will stop after approximately 10 seconds.

STEP 5

The green LED should turn off and blink briefly every 5 seconds. The system is now calibrated.

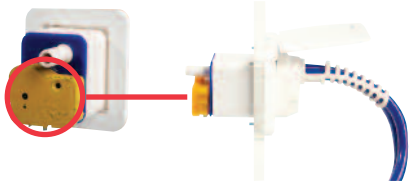

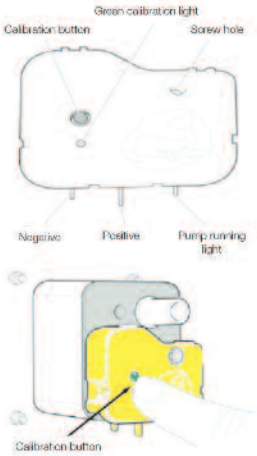

Watermaster® IC is now installed and ready for use

During normal use, once calibrated you will only need to recalibrate if you use a different pump. Simply repeat the steps above to calibrate a new pump.

Whale - Support UK Proud to manufacture in the UK

Tel: 028 9127 0531 info@whalepumps.com www.whalepumps.com

*Whale Watermaster® IC (EP1632) is compatible with a Whale® socket with built-in pressure switch (ES1001 or ES5001) and high-flow Watermaster® submersible pump. It is NOT compatible with in-line pressure switch system.

i Van® Control Panel

The easy way to control your living environment

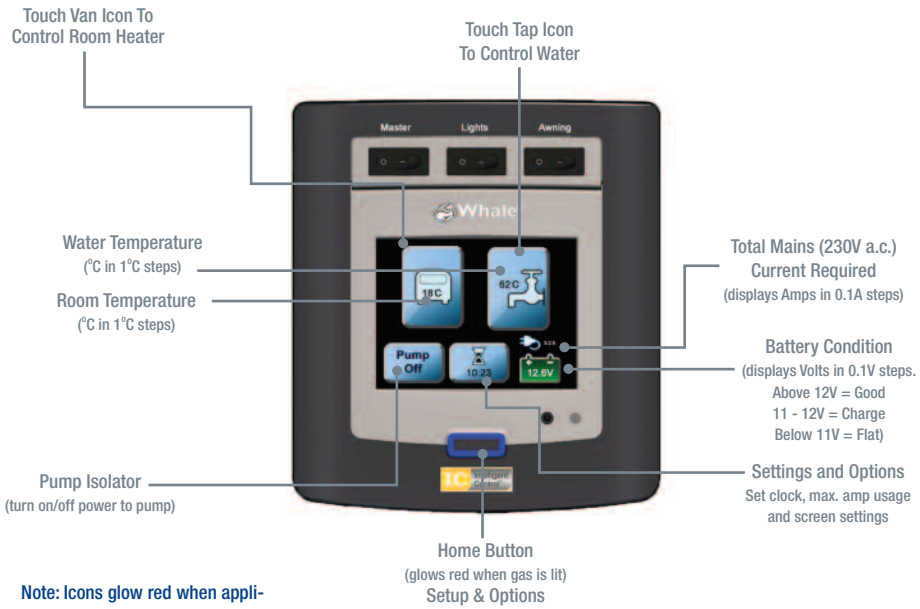

Note: Icons glow red when appliances are in use.

Welcome to your Whale i Van®

The easy way to control your living environment

Wireless Control of Whale® Water and Space Heaters and Water Pumps* from an intuitive touch screen display

What is i Van®?

- The easy way to control your living environment
- Simple, intuitive touchscreen display
- Easy to set programmable timers
- Controls power and temperature separately

How does Whale i Van® work?

The intuitive touchscreen control panel communicates wirelessly with Whale Water and Space Heaters, creating your ideal living environment with ease. It simply guides you through setting your water heating and air temperature controls, and also allows you to set automatic timers (up to 3 per day) for each unit individually.

**** Pump control module is an optional feature.***
Please check your vehicle manual to confirm which i Van® model is fitted.

Room Heater Control

From the home screen press

Select the setting required:
500W / 1000W / 2000W / Gas / Gas + 1000W / Fan

Then set desired temperature

using the - and + keys

Return to home

Note: for maximum heat select

ROOM HEATER ICON

Room Heater Night Setting

For a quiet night time operation and to reduce energy consumption

Select and a lower temperature

e.g. 15°C for low electric night time background heating

Water Heater Control

From the home screen press

For standard heat up - Select the setting 750W

TIMED BOOST (ideal for shower time)

Select the setting required: *1500W / gas / 1500W and gas*

The water will heat up quickly for 15mins,

then will automatically resume the

previous heating setting.

Return to home

WATER HEATER ICON

Pump Control (optional)

Note: Please check your vehicle manual to confirm if your i Van includes Pump Control

From the home screen press to turn the power

to pump on/off.

Turns red when pump is running.

Turns red when power to pump is on

Please note: Red bar will turn red when pump is running.

Options and Settings

Setting your Clock

Set the clock:

From the home screen, press then

Use the - and + keys to adjust the hour.

Then use the arrow buttons to move the cursor to adjust the minutes.

Setting your Room and Water Heater Timers

Set up to 6 timers (3 per device)

From the home screen, press

Then press OR

Use the - and + keys to adjust the heat setting.

Use the arrow buttons to move the cursor across to set energy source, on/off time, as well as the desired temperature (for Room Heater only).

Please note that water temperature is pre-set by Whale for safety and cannot be adjusted.

To activate timers

Return to home screen and press

When a timer is set and active,

a timer icon will appear top right of the icon.

Setting Other Options

To enter the options menu:

Press then

Use the arrow buttons to scroll through the options:

Mains Supply Maximum Current / Screen Brightness / Water Heater Boost Time / Screen Off After Time / Beep / Flashing Light

Set each option using the - and + keys.

Diagnostics

i Van® also provides diagnostic help screens to allow you to identify any issues with the appliances it controls and reset on screen where possible.

Pop-up screens:
If a pop-up screen appears, follow the instructions on-screen.

Home

To return to the home screen at any stage, press the Home Button.

A Whale video shows a step by step demonstration of i Van® to help you get started.

This video is included in the user guide pack supplied with new vehicles fitted with i Van, or is also available at www.whalepumps.com/rv

i Van® Intelligent Control Panel

Options Menu Quick Guide

To enter the Options Menu:

Press

Use the arrow icons to scroll through the options screen:

Mains Supply / Brightness / Water Heater Boost Time / Screen Off After / Beep / Flashing Light

Options Screen

Screen Off After

Automatically puts the i Van® screen into sleep mode, where all settings remain active but the screen is turned off. The screen can be reactivated at any time by pressing the home button.

Options available are:

3 mins / 5 mins / 10 mins / 15 mins / 30 mins

Use to select

Beep

To turn the beep on or off, select:

On / Off

Use to select

Flashing Light

To turn the blue flashing light on or off, select:

On / Off

Use to select

Mains Supply

To set the maximum power consumption, as determined by the level of mains electric available.

Options available are 1 amp - 16 amps

Use + − to select

Brightness

To adjust the brightness of the i Van® screen, select one of the following options:

Dim / Low Bright / Bright

Use + − to select

Water Heater Boost Time

To increase/decrease water heater boost time, select one of the following options:

15 mins / 30 mins / 45 mins / 60 mins / Forever

Use + − to select

Note: After the boost time has reached 0, the water heater will automatically return to the previous setting.

Note: If Forever is selected, the water heater will remain constantly on until all water heater settings are turned off.

Gas and Electric Space Heaters

The Discreet Heating System

The easy way to control your living environment

- Internal or underfloor installation
- Gas only or gas & electric models
- Simple and intuitive to use
- Electronic temperature control
- Frost protection setting
- Quiet night time setting
- Energy efficient design
- Lightweight units
- No internal flue or chimney required

Internal
SH2201
SH2202

Underfloor
SH2211B
SH2212B

Space Heater Fault Finding

No. of flashes	Fault	Remedy
1	No flame detected	Check gas supply.
2	Overheat	Check the air ducts and vents are not blocked or restricted. We recommend you wait at least 5 to 10 minutes to allow the heater to cool before clearing lockout.
3	Low/High Supply Voltage	Ensure voltage is above 10V at the heather and below 15V.
4	Combustion Air Fault	Check combustion air flue and exhaust flue for blockages.
5		Other / internal fault Attempt to clear lockout as shown below. If this fails contact Whale Heating Support: 0845 217 2933.

To clear any lockout switch off and back on within 2.5 seconds

Gas and Electric Storage Water Heaters

High Capacity (WH1302)

- 13L capacity hot water tank
- Twin electric element 1200W
  - Fast heat up (5.2A) 600W
  - Low current draw (2.6A)
- No flue cover required
- Fully Insulated
- Flue adaptor plate available AK1203

Rapid Heat (WH0802)

- 8L capacity hot water tank
- Twin electric element
  1500W- Fast heat up (6.52A)
  750W - Low current draw (3.26A)
- No flue cover required
- Fully Insulated
- Flue adaptor plate available AK1203

Space Heater Fault Finding

No. of flashes	Fault	Remedy
1	No flame detected	Check gas supply.
2	Overheat	Check there is water in the appliance. We recommend you wait at least 5 to 10 minutes to allow the heater to cool before clearing lockout as described below.
3	Low/High Supply Voltage	Ensure voltage is above 10V at the heather and below 15V.
4	Other / internal fault	Attempt to clear lockout as shown below. If this fails contact Heater Support: 0845 217 2933.

To clear any lockout switch off and back on within 2.5 seconds

Service Kits and Accessories

Space Heater Accessories

Flue Pipe Range:

FK2075 0.75m Flue Pipe
FK2125 1.25m Flue Pipe
FK2020 2m Flue Pipe

Ducting Fittings Range:

DX6510BR End Cap Fitting
DX6552BR Straight Fitting
DX6503BR Tee Fitting
DX6504BR Y Fitting

Vent Range:

DX6511 Directional Fitting (Beige)
DX6521 Directional Fitting (Black)
DX6531 Directional Fitting (Cream)
DX6516 Fixed Fitting (Beige)
DX6536 Fixed Fitting (Cream)
DX6526 Fixed Fitting (Black)

Water Heater Accessories

AK1203 Universal Adapter Plate
AK1202 Control Unit Extension Cable

Electric Pump Service Kits

AK1318 On Board Pump Replacement Pump Head (for Smartflo or Watermaster On Board)

AK8834 Watermaster Exterior Pump Service Kit
Contains 4 O Rings
1 O Ring
1 Diaphgram
2 Non Return Valves

AK1317 On Board Pump Microswitch Kit (for Smartflo or Watermaster On Board)
Contains 1 Microswitch

AK1320 On Board Pump Strainer Service Kit (for Smartflo or Watermaster On Board)
Contains 12mm Smartflo Quick Connection
Filter Assembly

AS5005 Watermaster Exterior Pump Socket Microswitch Service Kit
Contains 1 Microswitch
1 Microswitch Contact Strip

AS8090 Superfil - Plug & Gasket Service Kit
Contains 1 Plug
1 Cover & Gasket

AS8092 Superfil - Socket & Gasket Service Kit
Contains 1 Socket
1 Cover & Gasket

UH0814 AquaSmart plug and Filter Combo

Manual Pump Service Kits

AK0618 V Pump Service Kit
Contains 1 Handle Buffer
1 Cup packing
1 Buffer
1 Valve
1 Valve Stem
1 Gland U Packing
3 O rings

AK4615 Babyfoot Pump Service Kit
Contains Diaphgram
Valves
O Rings
Springs
Fasteners

Elegance Taps & Showers

AK5030 Tap/Shower Service Kit
Contains 8 O-Ring
2 Valve Washer
4 Screw Cover - White
4 Screw Cover - Large White
4 Screw Cover - Beige
4 Screw No.6 csk
4 Screw No.6 pan

Continues overleaf >

AS5122 Tap / Shower Upgrade Kit - White
Contains 2 Knobs + Spindles
1 Ring - Blue
1 Ring - Red

AS5123 Combo Handset - White
Contains 1 Handset
1 O-Ring

AS5020 Elegance Short Outlet - White
Contains 1 O-Ring
1 Gland Screw
1 Combo Shower Head

AS5125 Elegance Long Spout - White
Contains 1 O-Ring
1 Gland Screw
1 Handset

RT9000 Microswitch Service Kit

AS5145 Shower Hose Kit - white
Contains 2 O-Rings
1 1.5 m Hose Assembly

AS5147 Shower Hose 2.1m - White
Contains 2 O-Rings
2 2.1 m Hose Assembly

AS5149 Shower Hose Connection Service Kit - White
Contains 4 O-Ring
2 Outer Collar
2 Hose Ferrule

AS5623 Combo Handset - Beige
Contains 1 O-Ring
1 Handset

AS5625 Elegance Long Spout - Beige
Contains 1 O-Ring
1 Gland Screw
1 Handset

AS5089 Elbow Single Tap Service Kit
Contains 1 Elbow Piece Assembly

AS5626 Tap / Shower Upgrade Kit - Beige
Contains 2 Knobs and spindles
1 Ring - Blue
1 Ring - Red

AS5146 Shower Hose (1/2'' BSP) - White
Contains 1 1/2"-3/8" Bsp Shower Hose 2.1m -1.7m

AS5148 Hose for Swim'n'rinse
Contains 1 1/2"-3/8" Bsp Shower Hose 2.1m

AS5050 Shower Elbow Service Kit
Contains 1 Ring
1 Shower Elbow
1 O-Ring

AS5645 Shower Hose Kit - Beige
Contains 4 O-Rings
1 Shower Socket
1 Bush
1 Hose 1.5m
2 Outer Collar
2 Hose Ferrule

AS5649 Shower Hose Connector - Beige
Contains 4 O-Rings
2 Outer Collars
2 Hose Ferrule

Elite Taps & Showers Spares Kits

AK6310 Replacement Spout - Chrome
Contains 1 Nozzle
2 O-Rings
1 Spout

AK6350 Replacement Spout - White
Contains 2 O-Rings
1 Nozzle (Gold)
1 Spout

RT9000 Replacement Microswitches X 2
Accessories

Accessories

AK7208 In-Line Pressure Switch Service Kit
Contains 1 O ring (valve)
1 Valve Stem
1 Microswitch
1 Valve Spring
1 O ring (tailpiece)
1 Diaphram
1 Valve

AK7209 Inline Pressure Switch Service Kit (for grooved stem version - suitable for 12mm Quick Connecter)
Contains 1 O ring (valve)
1 Valve Stem
1 Microswitch
1 Valve Spring
1 O ring (tailpiece)
1 Diaphram
1 Valve

EM9402 Watermaster Mains Connection
Contains Adaptor to connect to service towers

EM9403 Watermaster Mains Connection
Contains 7.5m lay flat mains hose
3 Hose fitting connectors

EM9406 Watermaster Mains Connection
Contains 1 Push fit female mains connector
1 Tap connector

EM9407 Watermaster Mains Connection
Contains Adaptor compatible with Truma Crystal II® and Compact® Sockets

AS8836 Dual Connector Plug Assembly Kit
Contains 1 Retaining Screw
2 O-Rings
1 Plastic Plug
4 Screw Grubs
4 Contact Pins

AS8839 Cap and Gasket Dual Connector

Abbreviations

ABS	Acrylonitrate – Butadiene – Styrene
BSP	British Standard Pipe Thread
Ft	Feet
Kg	Kilograms
lbs	Pounds
ltrs/min	Litres per Minute
ltrs	Litres
mm	Millimetres
m	Metres
PBT	Polybutylene Terephthalate
PVC	Polyvinyl Chloride
V d.c.	Voltage (Direct Current)
“	Inches

MUNSTER SIMMS ENGINEERING LIMITED AND WHALE WATER SYSTEMS INC
(a subsidiary of Munster Simms Engineering Limited) ("Company")

STATEMENT OF LIMITED WARRANTY

The products manufactured and supplied by the Company ("**Products**"), are warranted to be free from material defects in design, workmanship and material under normal use ("**Defects**") for (unless otherwise extended in advance in writing by the Company) a period of 12 months from date of purchase, save that this warranty shall not apply where the Defect is attributable to defective materials supplied by third parties. In such event, the only remedy of the buyer of the Products ("**Buyer**") will be against that third party.

This warranty applies only to Products that are properly installed and used in accordance with all oral and written maintenance and operation instructions provided by the Company. The Company shall not be liable for a breach of any of the warranties in this Statement of Limited Warranty if the Buyer makes any further use of the Products after giving the Company notice of any Defect or the Buyer alters or repairs such Products without the written consent of the Company. Products that have been disassembled or modified (without prior written approval of the Company), are not covered by this warranty.

All Products are covered by a 1 year limited warranty (detailed below) from (unless otherwise extended in advance in writing by the Company) date of purchase ("**Standard Warranty**"). In addition to the Standard Warranty, some individual Products are covered by a further warranty, as detailed in Table 1 below ("**Additional Warranty**").

In the event that any of the warranties offered by the Company are breached, the Company shall (at its discretion) repair, replace or issue a spares kit for the defective Product subject to prior examination at Company premises. If the Company complies with this paragraph, it shall have no further liability for a breach of the warranties in respect of such Products. Adjustment or replacement of defective parts made under this warranty will not extend the warranty period applicable either under the Standard Warranty and/or the Additional Warranty.

The Company shall not bear any costs of removal, installation, transportation, or other charges that may arise in connection with a warranty claim by the Buyer. Such costs shall be the Buyer's sole responsibility.

No claim in respect of defective Products will be valid unless the alleged defective Products are returned at the Buyer's expense to the Company for inspection, together with proof of purchase. Non-stock/ special order items are non-returnable by the Buyer in any circumstances, and this warranty does not apply to prototype models.

EXCLUSIONS:

The Company shall not be liable for any indirect loss or for any special, incidental, punitive or consequential damages suffered by the Buyer and/or any third party, whether this loss arises from breach of a duty in contract or tort or breach of a statutory duty or in any other way, including, without limitation, loss arising from the negligence, default, breach of duty, non-delivery, delay in delivery or defects or errors in the work undertaken by the Company pursuant to the terms of this Statement of Limited Warranty or in connection with any other claim arising in connection with manufacture and/or supply of the Products.

In particular, the Company shall not be liable (without limitation) for:

- Loss of profits, increased production costs or other economic injury or loss;
- Loss of contracts or opportunity; and/or
- (insofar as is permitted by applicable law) damage to property of the Buyer or any third party.

The Company shall under no circumstances be liable for any breach of its obligations hereunder and/or under any contract governing sale and purchase of the Products ("**Contract**") resulting from causes beyond its control including but not limited to fires, strikes, lockouts, insurrection or riots, terrorism or civil disorder, embargoes, wrecks or delays in transportation, requirements or regulations of any governmental authority, tempest, earthquake or other natural disaster, flood, bursting or overflowing of water tanks, failure or shortage of power, fuel or other utilities, or loss of data and/or communications due to causes such as those referred to in this paragraph.

This statement sets out the Company's entire liability in respect of the Products and the Company's liability under this statement shall be in lieu of all other warranties, conditions, terms and liabilities, express or implied, statutory or otherwise howsoever except any implied by law which cannot be excluded.

All warranties, conditions and other terms implied by statute or common law (save for the conditions implied by section 12 of the Sale of Goods Act 1979) are, to the fullest extent permitted by law, excluded from the Contract.

Continues overleaf >

Subject to the remaining provisions of this Statement of Limited Warranty, the Company's total liability in contract, tort (including negligence or breach of statutory duty), misrepresentation, restitution or otherwise, arising in connection with the performance or contemplated performance of the Contract and supply of the Products shall be limited to the Contract price.

Nothing in this Statement of Limited Warranty shall operate so as to exclude or restrict the Company's liability for death or personal injury caused by its negligence. The Company shall NOT be liable for any condition, warranty or representation made by a distributor or other person acting on behalf of the Company unless expressly confirmed by the Company in writing.

This Statement of Limited Warranty shall be governed and construed in accordance with Northern Irish law and all disputes arising in connection hereto shall be submitted to the exclusive jurisdiction of the Northern Irish Courts.

Table 1:

Product type	2 years	3 years	5 years	10 years
Smartflo & Watermaster On Board Pump	✓			
Chromed metal taps (TT)	✓			
Smartbail Bilge Pump		✓		
Orca Bilge Pump		✓		
Supersub Bilge Pump		✓		
Space Heater / Water Heater		✓		
Manual Bilge Pump			✓	
Manual Freshwater Pump			✓	
Manual Toilet Pump			✓	
Quick Connect Plumbing fittings				✓
WhaleX tubing				✓

The period of such Additional Warranty shall commence automatically the date the Standard Warranty expires.

Note that these periods may be further enhanced through special offers, or revisions. Please see your product documentation for details.

DISCLAIMER

All Products are rated and appropriate for use with water unless otherwise specified by the Company. Compatibility and suitability for other liquids should be verified in writing by the Company prior to such use. All specification information on Products included in Product literature is based on tests using clean cold water unless otherwise specified. Any performance / specification figures shown have been calculated using standard testing procedures. Where maximum output is stated, such maximum output refers to pumps acting at zero lift and zero head. Actual performance may vary depending on the application, installation and environmental factors. Neither the accuracy nor completeness of the information contained in any Product brochure is guaranteed by the Company and may be subject to change at its sole discretion. The Company may, at its sole discretion, change the technical performance, dimensions or appearance of any of its Products without prior notification to purchasers. The Company shall not be liable to a purchaser for any indirect or consequential loss or damage (whether for loss of profit, loss of business, depletion of goodwill or otherwise), costs, expenses or other claims for consequential compensation whatsoever (howsoever caused) which arise out of or in connection with the use of a Product. Where dimensions are stated, such dimensions are for guidance only. Inch measurements are conversions from millimetre dimensions and are shown to the nearest 1/16". US gallons volumes are conversions from litres and are also shown for guidance purposes only to the nearest 1/16. Please contact the Company directly if precise measurements are required.

Please note: All products shown in this brochure are designed for use in caravan / recreational vehicles and are not suitable for installation in domestic applications. Unless otherwise stated in your manufacturers' user information.

Whale's policy is one of continuous improvement and we reserve the right to change specifications without prior notice. Illustrations are for guidance purposes only.

© Whale® 2015. All rights reserved.

Whale® is a registered trademark of Munster Simms Engineering Ltd, trading as Whale®

Please note that by contacting Whale Support, you will be indicating your consent to receiving product updates, recall information, help guides, and appropriate marketing messages from us via post, email or telephone unless you indicated an objection to receiving such messages.

©2015 Copyright Munster Simms Engineering (also trading as Whale) all rights reserved.

Copyright Whale 2015

All rights reserved.

Whale's policy is one of continuous improvement and we reserve the right to change specifications without prior notice. Illustrations are for guidance purposes only.

Santoprene® is a registered trade name of Advanced Elastomer Systems, LP, an Exxonmobil Chemical Affiliate
Delrin®, Teflon® and Neoprene are registered trade names of Dupont Neumeurs and Co.
Monprene® is a registered trade name of Technore Apex
Truma® Crystal II® Compact® are registered trade names of Truma GmbH & Co.

Affiliations and Accreditations

Recreational Vehicle Builder Technical Partnership

Our technical support team of highly skilled engineers work in partnership with recreational vehicle builders around the world. This collaboration delivers bespoke systems that are ideal for each builder, saving both time and money.

Quality Assurance

All Whale electrical products have the appropriate CE Mark, hence conforming to the relevant European Union Standards. It is not advisable to install electrical products which do not carry the CE Mark.

Our company aims to consistently provide the highest quality products and customer service, delivered through efficient engineering and production processes. Our success has been recognised through gaining ISO 9001:2008, Quality Management System and ISO14001:2004, Environment Management System and BS OHSAS 18001: 2007 Health and Safety Management System.

Whale Trade Names

Whale®, Babyfoot®, AquaSmart®, Smartflo®, i Van®, Whale IC®, IC Logo Device® Watermaster® are trade names of Munster Simms Engineering Limited, Bangor, Northern Ireland. (Also trading as Whale)

Patent and Design Registration Applications

SPACE HEATER / WATER HEATER RANGE pages 16 to 37

International PCT Patent Application WO 2011/029826.

WHALE WATER HEATER RANGE pages 28 to 37

DUAL ELECTRICAL ELEMENT WITH SINGLE THERMOSTAT

Patents pending in Europe (10705275.5), Australia (AU 2010213125) and New Zealand (NZ 595169).

WATERMASTER EXTERIOR RANGE page 42 to 43

Patents pending in Europe (11184422.1) and the United Kingdom (1117353.1).

WATERMASTER MAINS page 50 to 51

This product is protected by the following granted patent: United Kingdom Patent No. GB 2 289 747.

WATERMASTER IC PUMP CONTROLLER page 14 to 15

Patents pending for water supply for a mobile home in UK Patent No. GB2409703B.

WATERMASTER ON BOARD page 40

Patents pending: 1214335.0

WATERMASTER IC page 14

This product is protected by tyhe following pending Patent Application Patent UK Application No. 1017025.6

National Caravan Council Limited

Investor in People

The Caravan Writers' Guild

Customer Support Services

Whale® employees are committed to providing excellent customer service, product installation and maintenance advice.

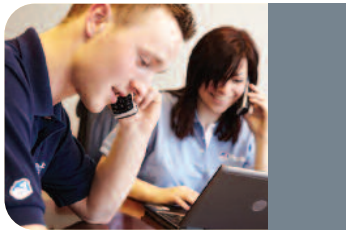

Whale® Customers Say...

"I find it very refreshing that Whale water systems obviously cares for its customers over the smallest detail."

Geoffrey Beaven

"It is refreshing to find a manufacturer, that not only supplies first rate products but also gives excellent back-up service…"

Brian Jarvis (Caravan Owner)

"This has got to be the finest after sales service I have experienced. What a superb company to deal with."

Rodney Grainger, Caravan Owner

Whale®
Munster Simms Engineering Ltd.
2 Enterprise Road, Bangor, BT19 7TA, N. Ireland.
tel: +44 (0)28 9127 0531 fax: +44 (0)28 9146 6421
info@whalepumps.com whalepumps.com

NOTES