SMART TWIST STEPPER MACHINE

SF-S0979SMART

USER MANUAL

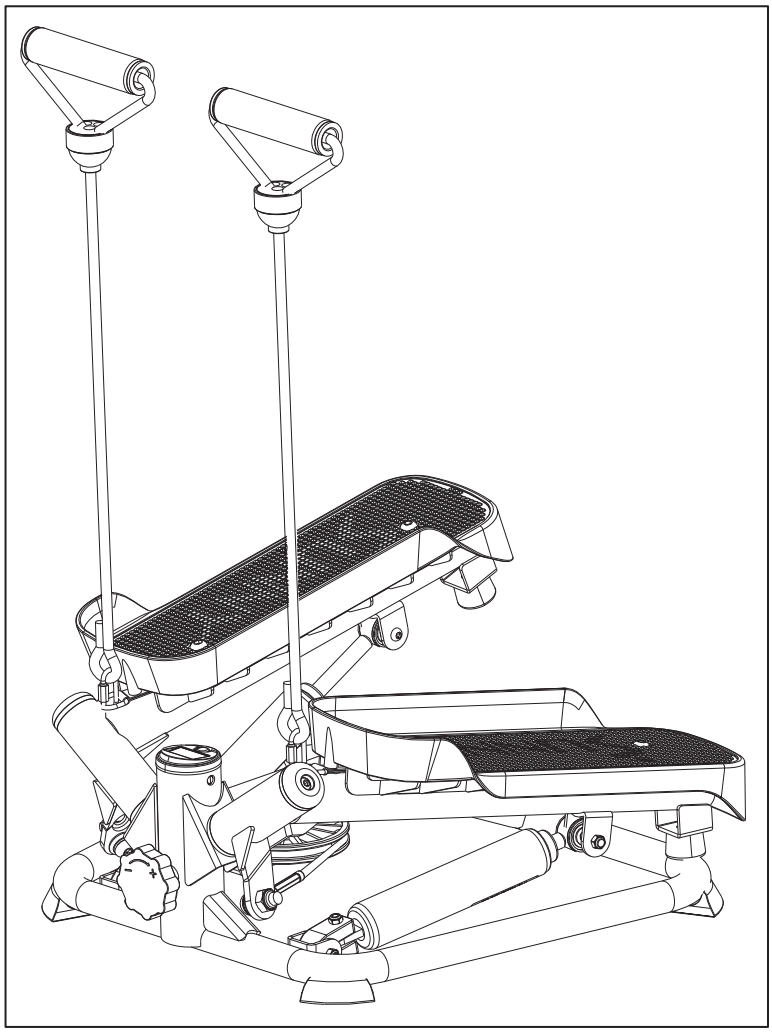

IMPORTANT! Please retain owner's manual for maintenance and adjustment instructions. Your satisfaction is very important to us, **PLEASE DO NOT RETURN UNTIL YOU HAVE CONTACTED US**: support@sunnyhealthfitness.com or 1- 877 - 90SUNNY (877-907-8669).

WWW.SUNNYHEALTHFITNESS.COM

IMPORTANT SAFETY INFORMATION

We thank you for choosing our product. To ensure your safety and health, please use this equipment correctly. It is important to read this entire manual before assembling and using the equipment. Safe and effective use can only be achieved if the equipment is assembled, maintained, and used properly. It is your responsibility to ensure that all users of the equipment are informed of all warnings and precautions.

1. Before starting any exercise program, you should consult your physician to determine if you have any medical or physical condition that could put your health and safety at risk or prevent you from using the equipment properly. Your physician's advice is essential if you are taking medication that affects your heart rate, blood pressure or cholesterol level.
2. Be aware of your body's signals. Incorrect or excessive exercise can damage your health. Stop exercising if you experience any of the following symptoms: pain, tightness in your chest, irregular heartbeat, shortness of breath, lightheadedness, dizziness, or feelings of nausea. If you do experience any of these conditions, you should consult your physician before continuing with your exercise program.
3. Keep children and pets away from the equipment. The equipment is designed for adult use only.
4. Use the equipment on a solid, flat level surface with a protective cover for your floor or carpet. To ensure safety, the equipment should have at least 2 feet (60 cm) of free space all around it.
5. Ensure that all nuts and bolts are securely tightened before using the equipment. The safety of the equipment can only be maintained if it is regularly examined for damage and/or wear and tear.
6. Always use the equipment as indicated. If you find any defective components while assembling or checking the equipment, or if you hear any unusual noises coming from the equipment during exercise, discontinue use of the equipment immediately and do not use until the problem has been rectified.
7. Wear suitable clothing while using the equipment. Avoid wearing loose clothing that may become entangled in the equipment.
8. Do not place fingers or objects into the moving parts of the equipment.
9. The maximum weight capacity of this unit is 350 lbs (160 kg).
10. The equipment is not suitable for therapeutic use.
11. To avoid bodily injury and/or damage to the product or property, proper lifting and moving are required.
12. Your product is intended for use in cool and dry conditions. You should avoid storage in extremely cold, hot or damp areas as this may lead to corrosion and other related problems.
13. This equipment is designed for indoor and home use only; it is not intended for commercial use.

PRE-ASSEMBLY CHECKLIST

Before you start to assemble, please make sure all parts are included.

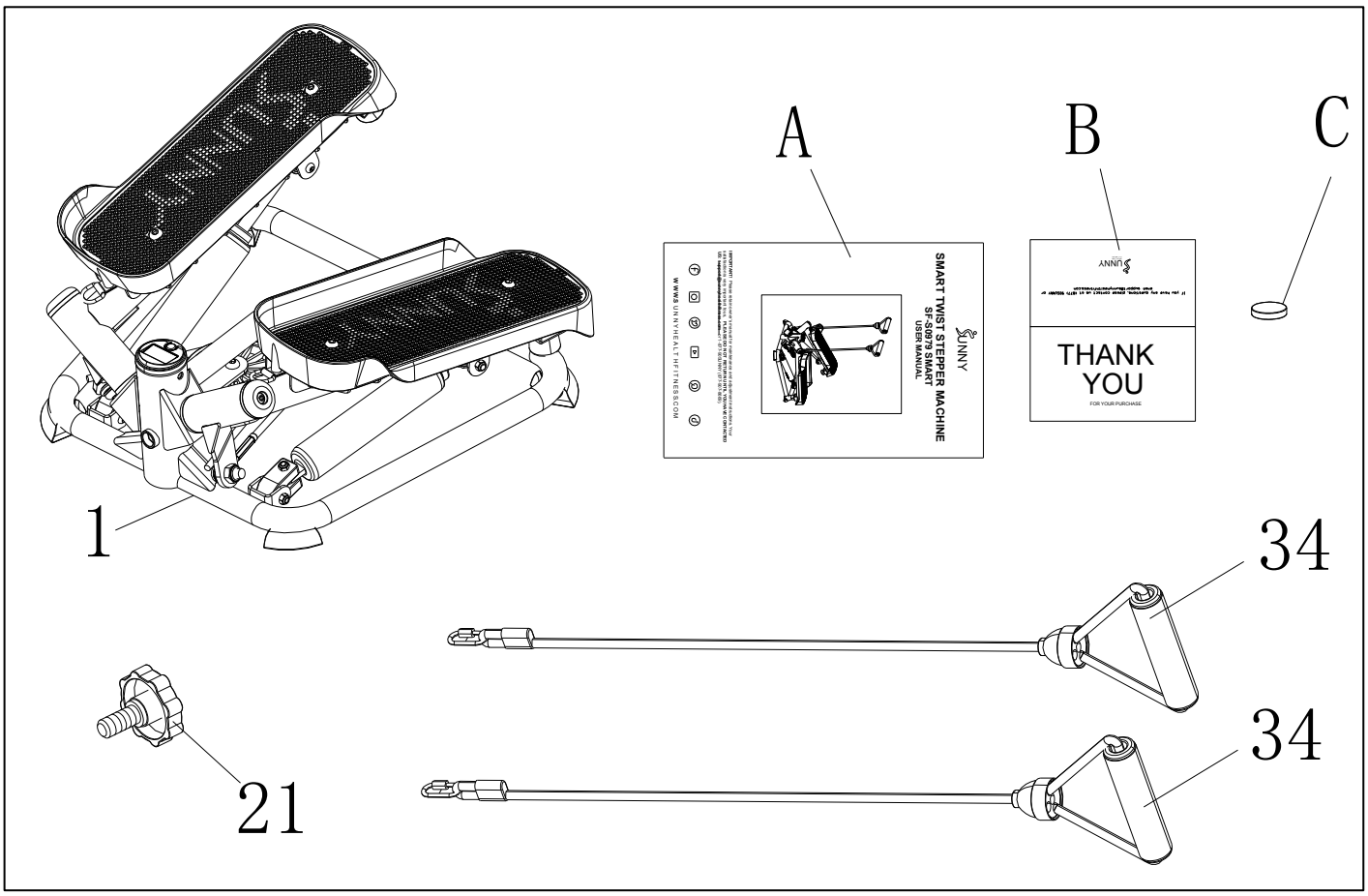

No.	Description	Spec.	Qty.
1	Main Frame		1
21	Adjustment Knob	Φ60*M14	1
34	Exercise Band	Φ8*640	2

No.	Description	Spec.	Qty.
A	Manual		1
B	Thank You Card		1
C	Battery	CR2032	1

Ordering Replacement Parts (U.S. and Canadian Customers only)

Please provide the following information in order for us to accurately identify the part(s) needed:

- ✓ The model number (found on cover of manual)
- ✓ The product name (found on cover of manual)
- ✓ The part number found on the “EXPLODED DIAGRAM” (page 9) and “PARTS LIST” (page 10)

Please contact us at support@sunnyhealthfitness.com or 1- 877 - 90SUNNY (877-907-8669).

BATTERY SAFETY WARNING

⚠ WARNING

- **INGESTION HAZARD:** This product contains a button cell or coin battery.
- **DEATH** or serious injury can occur if ingested.
- A swallowed button cell or coin battery can cause **Internal Chemical Burns** in as little as **2 hours.**
- **KEEP** new and used batteries **OUT OF REACH of CHILDREN**
- **Seek immediate medical attention** if a battery is suspected to be swallowed or inserted inside any part of the body.



NOTES:

1) Remove and immediately recycle or dispose of used batteries according to local regulations and keep away from children. Do NOT dispose of batteries in household trash or incinerate.
2) Even used batteries may cause severe injury or death.
3) Call a local poison control center for treatment information.
4) The compatible battery type CR2032 3V.
5) Non-rechargeable batteries are not to be recharged.
6) Do not force discharge, recharge, disassemble, heat above 50°C/122°F, or incinerate. Doing so may result in injury due to venting, leakage or explosion, resulting in chemical burns.
7) Ensure the batteries are installed correctly according to polarity (+ and -).
8) Remove and immediately recycle or dispose of batteries from equipment not used for an extended period of time according to local regulations.
9) Always completely secure the battery compartment. If the battery compartment does not close securely, stop using the product, remove the batteries, and keep them away from children.

ASSEMBLY INSTRUCTIONS

We value your experience using Sunny Health and Fitness products. For assistance with parts or troubleshooting, please contact us at support@sunnyhealthfitness.com or 1-877-90SUNNY (877-907-8669).

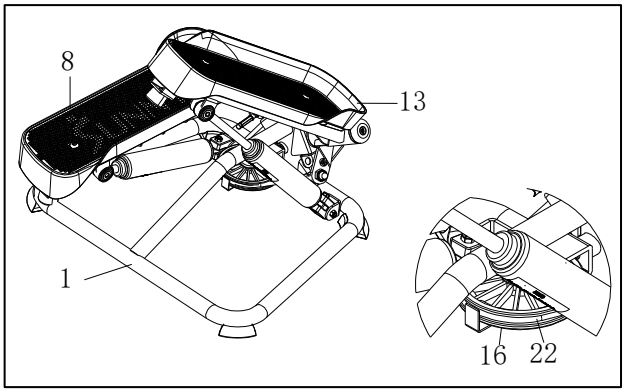

STEP 1:

Remove the **Main Frame (No. 1)** from the box.

Lift one pedal of **Left Pedal** or **Right Pedal (No. 8** or **No. 13)** up with your hand and ensure that the **Wire Rope (No. 22)** is put in the slot of the **Pulley (No. 16)** as shown in the picture.

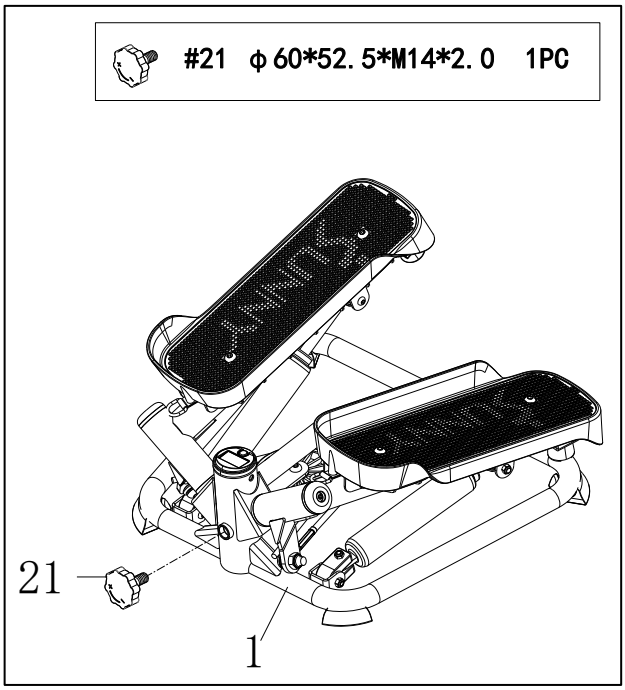

STEP 2:

Take out the **Adjustment Knob (No. 21)** from the manual bag.

Then insert the **Adjustment Knob (No. 21)** into the **Main Frame (No. 1)**, and adjust the tightness of the **Adjustment Knob (No. 21)** to the desired position.

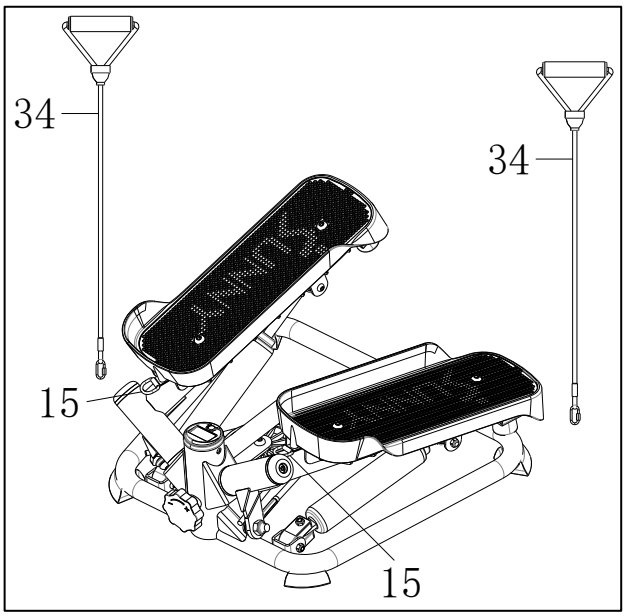

STEP 3:

Connect 2 **Exercise Bands (No. 34)** to the **Exercise Band Buckles (No. 15)** at the front ofthe left and right pedals as shown in the picture.

The assembly is complete!

MAINTENANCE & ADJUSTMENT GUIDE

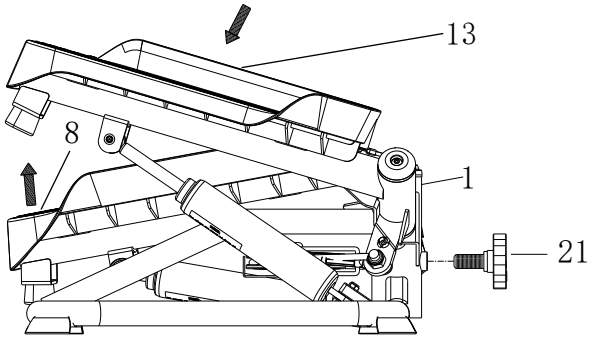

ADJUSTING THE STEPPING HEIGHT

Turn the **Adjustment Knob (No. 21)** *clockwise* to increase the stepping height.
Turn the **Adjustment Knob (No. 21)** *counter-clockwise* to decrease the stepping height.
NOTE: Before turning the adjustment knob, you need to lift one pedal of the **Left or Right Pedals (No. 8 or No. 13)** up and ensure the cable is around the pulley. If the cable is not properly positioned around the pulley, it can cause damage to the main frame of the product or prevent the height from adjusting correctly.

CLEANING

The stepper can be cleaned with a soft, clean, and damp cloth. Do not use abrasives or solvents on plastic parts. Please wipe your perspiration off the stepper after each use. Be careful not get excessive moisture on the computer display panel as this might cause electrical hazards or electronics failure.
Please keep the stepper, especially the computer, out of direct sunlight to prevent screen damage.
Please inspect all assembly bolts and pedals on the stepper for proper tightness every week.

STORAGE

Store the stepper in a clean and dry environment, away from children.

NOTES:

If you are having a hard time balancing on the stepper, please hold onto something for support.

The **Hydraulic Cylinder (No. 20)** may become excessively hot after prolonged use and may be dangerous to touch. Allow the **Hydraulic Cylinder (No. 20)** to cool between uses.

EXERCISE BAND INSTRUCTIONS

1. Unscrew the hook nut located on the exercise band until the hook is open as shown in the picture below.
2. Attach the exercise band hook onto the exercise band buckle and screw the hook nut closed until the exercise band buckle is secured with the hook nut.
3. Assembly is done.

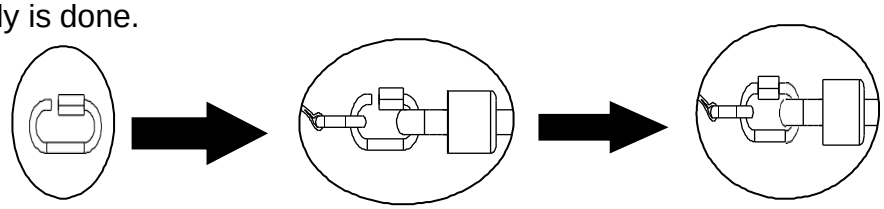

Adjusting the Exercise Band Length	
To Lengthen Exercise Band	**To Shorten Exercise Band**
Push one side of the exercise band down and then pull the bottom of the exercise band downward as shown in the picture below. Repeat this process until the exercise band is at the desired length. **NOTE:** This adjustment decreases the tension on the exercise bands.	Push the exercise band upward from the bottom and then pull one side of the top exercise band up as shown in the picture below. Repeat this process until the exercise band is at the desired length. **NOTE:** This adjustment increases the tension on the exercise bands.
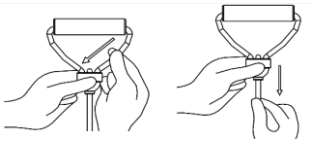	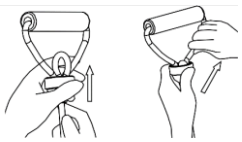
NOTE: When lengthening the exercise band, only one side of the exercise band can be pushed down. If the side that you are trying to push down does not move, try the other side of the exercise band.	

CHANGING THE BATTERY

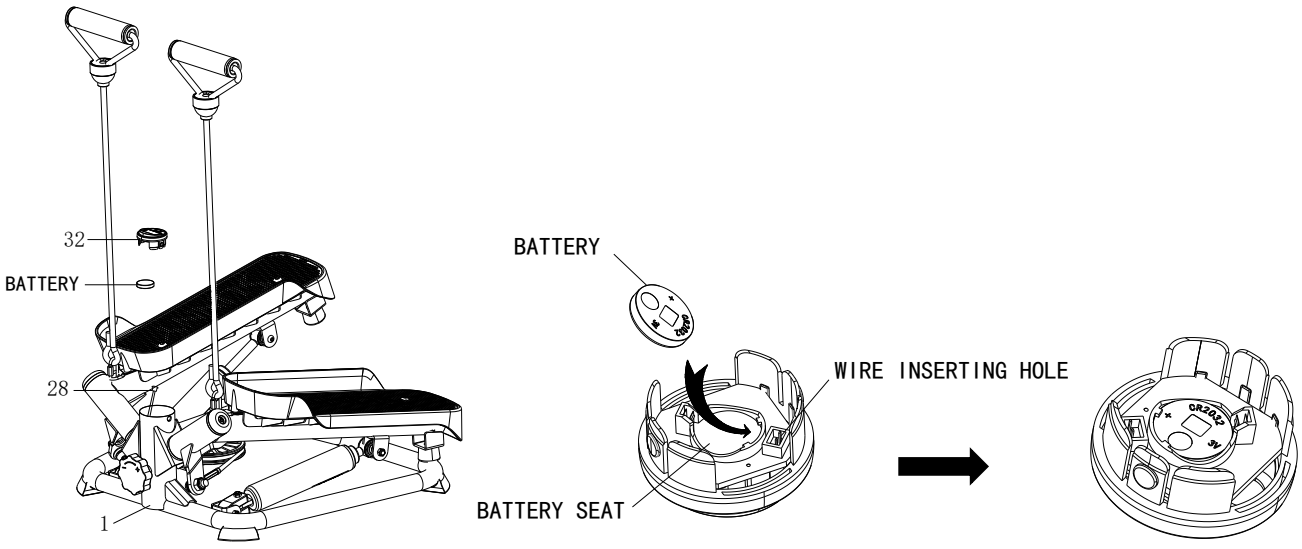

1. Remove **Computer (No. 32)** from **Main Frame (No. 1)** and disconnect the link wire of **Sensor (No. 28)** from the **Computer (No. 32)**.
2. Remove the battery from the backside of **Computer (No. 32)**.
3. Please insert the battery diagonally into the backside of **Computer (No. 32)**. Please ensure the positive (+) side is facing upward. and make sure the battery is under the obstruction as shown in above diagram.
   Note: If the battery is not installed properly, the **Computer (No. 32)** can't be turned on.
4. Insert the link wire of **Sensor (No. 28)** into the wire inserting hole on the back of **Computer (No. 32)**.
5. Insert the **Computer (No. 32)** into **Main Frame (No. 1)**.

EXERCISE COMPUTER

FUNCTION BUTTONS:

MODE: This button lets you to select a function. The computer will be reset by pressing the MODE button for 3~4 seconds except TOT. CNT (TOTAL COUNT).

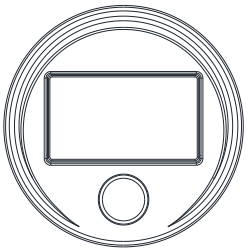

SPECIFICATIONS:

CNT (COUNT) ----------0~9999 TIMES
TMR (TIME) ----------00:00~99:59 MIN
CAL (CALORIES) ----------0~9999 KCAL
TOT. CNT (TOTAL COUNT) ----------0~9999 TIMES

FUNCTIONS & OPERATIONS:

1. **CNT (COUNT):**
   Automatically accumulates the count of steps taken during exercise. The computer counts 1 step after you step once with each foot.
2. **TMR (TIME):**
   Counts the total time of an exercise from start to finish.
3. **CAL (CALORIES):**
   Counts the number of total calories burned during an exercise from start to finish.
4. **TOT. CNT (TOTAL COUNT):**
   Displays total counts of steps since the battery is installed. To reset TOT. CNT (TOTAL COUNT), you need to remove the battery and reinsert.
5. **S (SCAN):**
   Press the MODE button until the computer shows the flickering S. SCAN mode will automatically scan each function in the following order: CNT- TMR- TOT. CNT- CAL.

BATTERY:

1. If you have an inaccurate reading on the computer, please replace the battery immediately.
2. The computer uses one CR2032 battery.
3. The computer is auto-powered. It turns on when exercise begins, and it turns off when no movement is made between 4 to 5 minutes.
4. All functions will automatically stop calculating when 'STOP' appears in the bottom right corner of the computer. This occurs when there is no signal for a period of 4 seconds. Once the exercise begins again, the computer will automatically start recalculating.

APP CONNECTION:

Connect Smart Equipment to SunnyFit App:

1. Scan to download SunnyFit from the app store:



2. Ensure that the Bluetooth function is turned on from your mobile device.
3. If this is your first time using the SunnyFit app, follow the in-app instructions to register for your free SunnyFit account and log in.
4. Begin any workout activity that matches your smart equipment, then follow the onscreen prompts to search for and connect to your smart equipment.
5. When connected, your stats and records will be displayed at the end of your course/session, and recorded in your account profile!

Troubleshooting:

- If you are having trouble connecting your smart equipment, visit www.sunnyfit.com/guide or scan the QR code below:



- If you require additional support, please contact support@sunnyfit.com

EXPLODED DIAGRAM

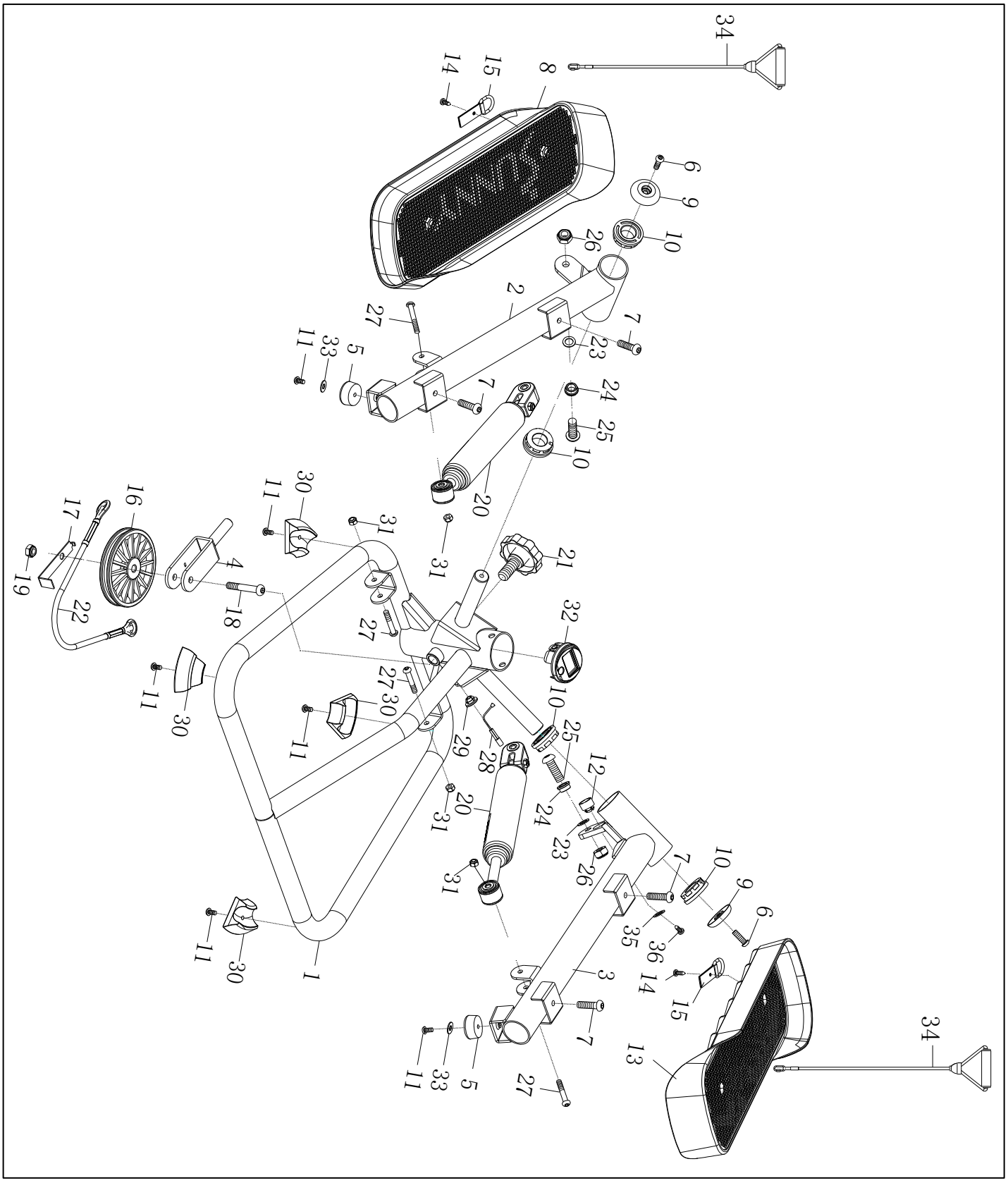

PARTS LIST

No.	Description	Spec.	Qty.
1	Main Frame		1
2	Left Foot Bar		1
3	Right Foot Bar		1
4	Pulley Fixed Bracket		1
5	Cushion	Φ30*20	2
6	Hexagon Bolt	M6*20*S5	2
7	Hexagon Bolt	M8*20*S5	4
8	Left Pedal	373*151*82	1
9	Cover		2
10	Bushing	Φ38*Φ19.1*12	4
11	Hexagon Bolt	M5*10*S3	6
12	Magnet	Φ17*Φ11*12	1
13	Right Pedal	373*151*82	1
14	Cross Countersunk Head Tapping Screw	ST4.8*8	2
15	Exercise Band Buckle		2
16	Pulley	Φ100*Φ8.2*20	1
17	Limit Plate		1
18	Hexagon Bolt	M8*40*15*S6	1

No.	Description	Spec.	Qty.
19	Nylon Nut	M8	1
20	Hydraulic Cylinder	Φ38	2
21	Adjustment Knob	Φ60*52.5*M14*2.0	1
22	Wire Rope	Φ6.5*365	1
23	Plastic Gasket	Φ16*Φ10.2*1	2
24	Alloy Wrap		2
25	Hexagon Bolt	M10*30*21*S5	2
26	Nylon Nut	M10	2
27	Hexagon Bolt	M6*36*8*S5	4
28	Sensor		1
29	Sensor Holder	Φ17*Φ11*8	1
30	Foot Pad	58.4*33.7*20	4
31	Nylon Nut	M6	4
32	Computer	DSC03609-APP	1
33	Flat Washer	Φ12*Φ5.2*1	2
34	Exercise Band	Φ8*640	2
35	Magnet Cap	Φ15*3.5	1
36	Cross Countersunk Head Tapping Screw	ST3*8	1

Version：1.3

CONNECT with us

DOWNLOAD

Track your fitness progress & join
FREE workout courses!

Download SUNNYFIT® today!

GET IT ON Google Play

Download on the App Store

FOLLOW

Find us on social media @sunnyhealthfitness

@sunnyhealthfitness

@sunnyhealthandfitness

@sunnyhealthfit

/sunnyhealthfitness

/sunnyhealthfitness

/sunnyhealthandfitness

www.sunnyhealthfitness.com