User Manual of Product 1:

Char-Broil Grill2Go X200 Portable TRU-Infrared Liquid Propane Gas Grill

GRILL2GO X200

MODEL NUMBERS
12401734
13401856

Product Guide

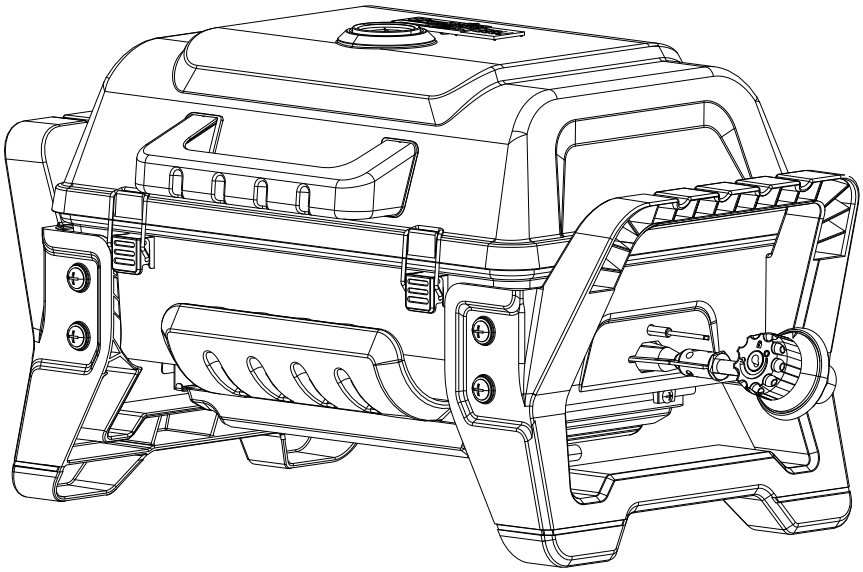

IMPORTANT: Fill out the product record information below.

Serial Number _____
See rating label on unit for serial number.

Date Purchased _____

FOR OUTDOOR USE ONLY

⚠ CAUTION:

Read and follow all safety statements, assembly instructions, and use and care directions before attempting to assemble and cook.

INSTALLER/ASSEMBLER:

Leave this manual with consumer.

CONSUMER:

Keep this manual for future reference.

⚠ WARNING:

Failure to follow all manufacturer's instructions could result in serious personal injury and/or property damage.

⚠ CAUTION:

Some parts may contain sharp edges.
Wear protective gloves if necessary.

If you have questions or need assistance during assembly, please call 1-888-430-7870.
To insure your satisfaction and for follow-up service, register your appliance online at **www.charbroil.com/register**

© 2013 Char-Broil, LLC • Columbus, GA 31902 • Printed in China • Assembly Instructions © 2013

42804972 • 02-08-13

TABLE OF CONTENTS

Product Record Information 1
For Your Safety 2
Safety Symbols 2
Installation Safety Precautions. 3
Use and Care 4-7
Food Safety 8
Limited Warranty 9
Parts list 10
Parts Diagram 11
Troubleshooting. 12-13
Registration Card 15

This instruction manual contains important information necessary for the safe use of the appliance.

Read and follow all warnings and instructions before using the appliance.

Safety Symbols

The symbols and boxes shown below explain what each heading means. Read and follow all of the messages found throughout the manual.

DANGER

DANGER: Indicates an imminently hazardous situation which, if not avoided, will result in death or serious injury.

WARNING

WARNING: Indicates a potentially hazardous situation which, if not avoided, could result in death or serious injury.

CAUTION:

CAUTION: Indicates a potentially hazardous situation or unsafe practice which, if not avoided, may result in minor or moderate injury.

CAUTION

For residential use only. Do not use for commercial cooking.

DANGER

1. **Never operate this appliance unattended.**
2. **Never operate this appliance within 10ft (3m) of any structure, combustible material or other gas cylinder.**
3. **Never operate this appliance within 25 ft (7.5 m) of any flammable liquid.**
4. **If a fire should occur, keep away from the appliance and immediately call your fire department. Do not attempt to extinguish an oil or grease fire with water.**

Failure to follow these instructions could result in fire, explosion or burn hazard, which could cause property damage, personal injury or death.

DANGER

If you smell gas:

1. **Shut off gas to the appliance.**
2. **Extinguish any open flame.**
3. **Open lid.**
4. **If odor continues, keep away from the appliance and immediately call your gas supplier or your fire department.**

Failure to follow these instructions could result in fire or explosion, which could cause property damage, personal injury or death.

WARNING

Do not attempt to repair or alter the hose/valve/regulator for any "assumed" defect. Any modification to this assembly will void your warranty and create the risk of a gas leak and fire. Use only authorized replacement parts supplied by manufacturer.

INSTALLATION SAFETY PRECAUTIONS

Installation Safety Precautions

- Use grill, as purchased, only with LP (propane) gas and the regulator/valve assembly supplied.
- This appliance is not for use in or on recreational vehicles and/or boats.
- Grill installation must conform with local codes or, in the absence of local codes,with the National Fuel Gas Code, ANSI Z223.1/NFPA 54, Storage and Handling of Liquefied Petroleum Gases, ANSI/NFPA 58; or Natural Gas and Propane Installation Code, CSA B149.1; Propane Storage and Handling, CSA B149.2.
- All electrical accessories (such as rotisserie) must be electrically grounded in accordance with local codes, or **National Electrical Code, ANSI / NFPA 70**. Keep any electrical cords and/or fuel supply hoses away from any hot surfaces.
- This grill is safety certified for use in the United States and/or Canada only. Do not modify for use in any other location. Modification will result in a safety hazard.
- This appliance will be hot during and after use. Use insulated oven mitts or gloves for protection from hot surfaces or splatter from cooking liquids.
- **Do not leave appliance unattended. Keep children and pets away from appliance at all times.**

WARNING

CALIFORNIA PROPOSITION 65

1. **Combustible by-products produced when using this product contains chemicals known to the State of California to cause cancer, birth defects, or other reproductive harm.**
2. **This product contains chemicals, including lead and lead compounds, known to the State of California to cause cancer, birth defects or other reproductive harm.**

Wash your hands after handling this product.

CAUTION

- **For residential use only. Not intended for commercial use.**
- **Do not leave appliance unattended. Keep children and pets away from appliance at all times.**

Call Grill Service Center for Help and Parts

- If you need assistance with your product or warranty parts call **1-888-430-7870. Hours of Service Center Operation are 8:00 A.M. To 6:00 P.M. EST Monday - Friday.**
- To order non-warranty replacement parts or accessories please visit us on the web at www.charbroil.com or call **1-888-430-7870** and one of our friendly and knowledgeable agents will be glad to assist you.

WARNING

For Safe Use of Your Grill and to Avoid Serious Injury:

- Do not let children operate or play near grill.
- Keep grill area clear and free from materials that burn (i.e. gasoline, propane, or any other flammable liquid or gas).
- Do not block holes in bottom or back of grill.
- Check burner flames regularly.
- Never use regulator from this grill with any other LP appliance.
- When cooking, the appliance must be on a level surface in an area clear of combustible material.
- Use grill only in well-ventilated space. For outdoor use only. NEVER use in an enclosed space such as carport, garage, porch, covered patio, or under an overhead structure of any kind.
- Do not use charcoal or ceramic briquets in a gas grill. (*Unless briquets are supplied with your grill.)*
- This appliance is not intended for and should never be used as a heater.
- Do not cover grates with aluminum foil or any other material. This will block burner ventilation and create a potentially dangerous condition resulting in property damage and/or personal injury.
- **Use grill at least 3 ft. from any wall or surface.** Maintain 10 ft. clearance to objects that can catch fire or sources of ignition such as pilot lights on water heaters, live electrical appliances, etc..

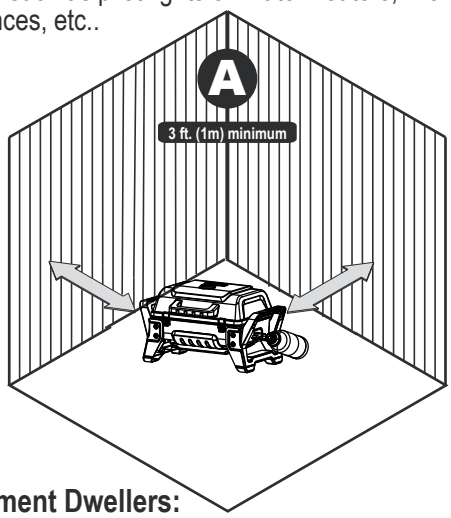

- **Apartment Dwellers:**
  Check with management to learn the requirements and fire codes for using an LP gas grill in your apartment complex. If allowed, use outside on the ground floor with a three (3) foot clearance from walls or rails. Do not use on or under balconies.
- **NEVER attempt to light burner with lid closed. A buildup of non-ignited gas inside a closed grill is hazardous.**
- **Never operate grill with LP cylinder out of correct position specified in assembly instructions.**

LP (Liquefied Petroleum Gas)

- Is nontoxic, odorless and colorless when produced. **For Your Safety**, LP gas has been given an odor (similar to rotten cabbage) so that it can be smelled.
- **LP gas is highly flammable and may ignite unexpectedly when mixed with air.**

Propane Cylinder Use (1 lb. Disposable)

- Use only cylinder marked “Propane Fuel”.
- Cylinder must be constructed and marked in accordance with the specifications for LP-gas cylinders of the U.S. Department of Transportation (DOT) or the National Standard of Canada, CAN/CSA-B339, Cylinders, Spheres and Tubes for the Transportation of Dangerous Goods.
- Size should be 4” diameter, 8” height, or 3” diameter, 10” height.
- Save cylinder cap and reinstall when not in use.
- Cylinder supply system must be arranged for vapor withdrawal. Gas cylinder must be upright in use.

Propane Cylinder Installation/Removal

Propane Cylinder Installation:

1. Remove cap from end of Propane cylinder (sold separately).
2. Cap should be kept on cylinder when not in use to prevent dirt and debris from entering Regulator/Valve.
3. Check end of cylinder attachment for dirt and debris. Clean out if necessary.
4. Insert threaded end of Propane Cylinder into Regulator/Valve and hand-tighten turning cylinder clockwise as shown below. **DO NOT USE TOOLS!** Over tightening can damage threads on Regulator/Valve.

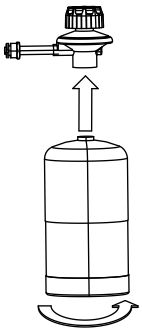

Regulator/Valve Installation/Removal

1. With knob pointing to back of grill, insert Regulator/Valve into end of burner (A)

Notch in Regulator/Valve MUST engage dimple in end of burner.

2. Once Regulator/Valve has completely engaged burner, turn Regulator/Valve clockwise (B) to lock in position with knob pointing as shown (C).
3. To remove reverse steps.

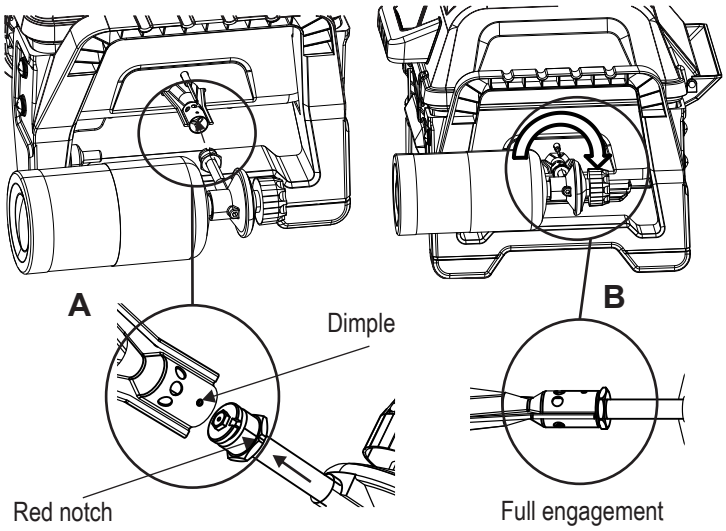

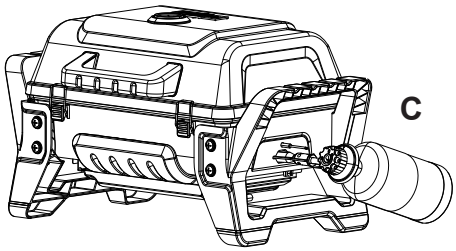

Leak Testing (1 lb. Disposable) IMPORTANT!

- During leak test, keep grill away from open flames or sparks and do not smoke. Grill must be leak tested outdoors in a well ventilated area.
- Leak test must be repeated each time gas cylinder is replaced or after storage.

Materials needed include clean paint brush and 50/50 soap and water solution. Use mild soap and water. **Do not use household cleaning agents.** Damage to components can result.

1. Be sure **control knob** on regulator is in "OFF" position.
2. Brush soapy solution onto **connection** between gas cylinder and regulator at **(A)**.
3. Brush soapy solution onto **connection** between regulator pipe threads and regulator, and burner tube and orifice at **(B)**. If growing bubbles appear, there is a leak. Retighten connections and repeat steps 1 , 2, and 3.

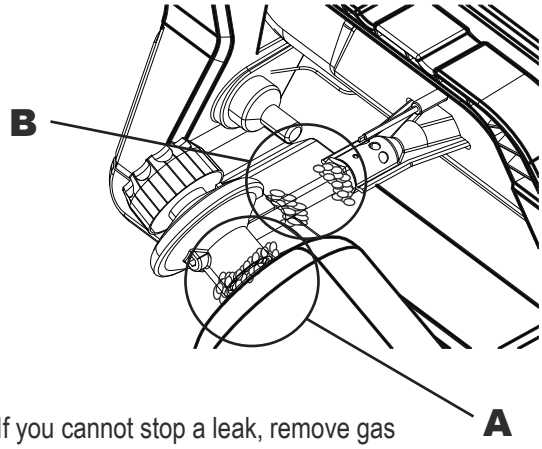

If you cannot stop a leak, remove gas cylinder from regulator and check for damaged threads, dirt and debris on regulator and gas cylinder. Also check to see if anything is obstructing flow of gas at regulator and gas cylinder openings. Remove any obstruction that may be found and repeat leak test. **If threads are damaged on either regulator or gas cylinder, replace.** Order new parts by giving the serial, model number and name of items needed to the Grill Service Center at **1-888-430-7870**.

IMPORTANT: REMOVE PROPANE CYLINDER FROM REGULATOR/VALVE WHEN NOT IN USE.

Propane Cylinder Removal:

1. Turn regulator OFF.
2. Allow Grill to cool.
3. Remove the propane cylinder by turning counter-clockwise until disengaged from the Regulator/Valve.
4. Install cap on cylinder. Cap should be kept on cylinder when not in use to prevent dirt and debris from entering Regulator/Valve.

DANGER

- **NEVER store a spare cylinder under or near the appliance or in an enclosed area.**
- **Never fill a cylinder beyond 80% full.**
- **An overfilled or improperly stored cyclinder is a hazard due to possible gas release from the safety relief valve. This could cause an intense fire with risk of property damage, serious injury or death.**
- **If you see, smell or hear gas escaping, immediately get away from the LP cylinder/appliance and call your fire department.**

Safety Tips

- The use of alcohol, prescription or nonprescription drugs may impair the consumer's ability to properly assemble or safely operate the appliance.
- When grill is not in use, disconnect 1 lb. cylinder.
- Never move grill while in operation or still hot. Allow the appliance to cool before moving or storing.
- Maximum load for side shelves is 10 lbs.
- The regulator may make a humming or whistling noise during operation. This will not affect safety or use of grill.
- If you have a grill problem see the Troubleshooting Section.
- Light burner. Check to make sure it is lit, close the lid and warm up grill on high for 10 minutes. Curing of paint and parts will produce an odor only on first lighting.
- Grill is not to be used as a heater.
- This appliance will be hot during and after use. Use insulated oven mitts or gloves for protection from hot surfaces or splatter from cooking liquids.
- Clean grill often, preferably after each cookout. If a bristle brush is used to clean any of the grill cooking surfaces, ensure no loose bristles remain on cooking surfaces prior to grilling. It is not recommended to clean cooking surfaces while grill is hot.

Ignitor Lighting

Do not lean over grill while lighting.

1. **Open lid during lighting.** Make sure LP cylinder is properly connected to regulator.
2. Turn regulator control knob to **HIGH** setting.
3. Repeatedly press ignitor pushbutton to light the burner.. Make sure burner lights and stays lit.
4. If ignition does NOT occur in 5 seconds, turn the regulator control knob **OFF,** wait 5 minutes and repeat the lighting procedure.
5. If IGNITOR does not work, follow match lighting instructions.

WARNING

Turn controls OFF and disconnect cylinder when not in use.

CAUTION

If ignition does NOT occur in 5 seconds, turn the burner controls OFF, wait 5 minutes and repeat the lighting procedure. If the burner does not ignite with the valve open, gas will continue to flow out of the burner and could accidently ignite with risk of injury.

Match Lighting

1. Insert lit match into match hole in grill end, next to burner. Turn regulator control knob to **HIGH** setting.
2. If ignition does NOT occur in 5 seconds, turn the regulator control knob **OFF,** wait 5 minutes and repeat the lighting procedure.

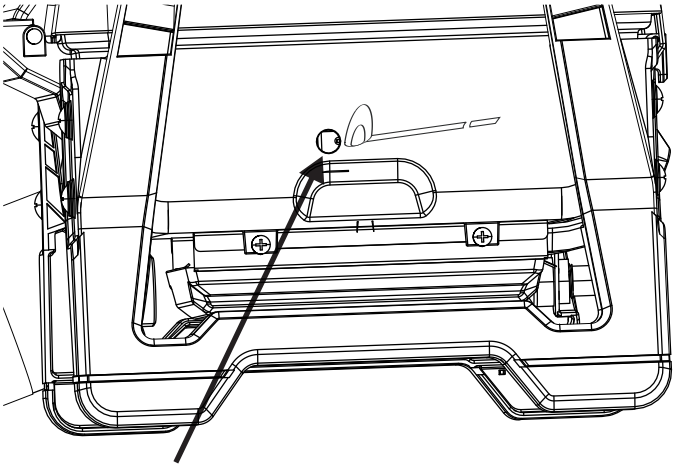

Match Light Hole

Before Your First Cookout.

Leak test your grill. Light burner, check to make sure it is lit, close the lid and warm up grill on **HIGH** for 10 minutes. Curing of paint and parts will produce an odor only on the first lighting.

Turning Grill Off

- Turn regulator control knob to the OFF position. Make sure the regulator control knob pops up. If it does not, discontinue use and order a new part.
- Disconnect 1 lb. Cylinder.

CAUTION

If the burner flame should be extinguished accidentally, turn the control knob to the OFF position and open the lid. DO NOT press the ignitor button. Wait 5 minutes before attempting to relight the grill.

CAUTION

- **Putting out grease fires by closing the lid is not possible. Grills are well ventilated for safety reasons.**
- **Do not use water on a grease fire. Personal injury may result. If a grease fire develops, turn regulator control knob and LP cylinder off.**
- **Do not leave grill unattended while preheating or burning off food residue on HIGH. If grill has not been regularly cleaned, a grease fire can occur that may damage the product.**

Burner Flame Check

Light burner. Make sure burner stays lit while rotating the regulator control knob from HIGH to LOW. Always check flame prior to each use.

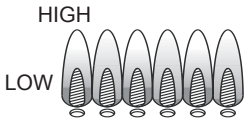

Cleaning The Burner Assembly

1. **Turn gas off at regulator control knob and disconnect LP cylinder.**
2. Remove cooking grid.
3. Remove regulator from burner tube by (1) rotating regulator until knob is to back of grill and then (2) by pulling outward. Shown **FIG. A**
4. Wipe ceramic electrode with rubbing alcohol and cloth. Clean burner exterior with soap and water. insert garden hose (preferably with nozzle), into burner tube forcing water through tube. Make sure water comes out of every porthole. Open clogged portholes with a thin wire. **Allow burner to dry thoroughly** and examine portholes. Due to normal wear and corrosion some portholes may become enlarged, if so replace burner. If any horizontal cracks appear from porthole to porthole or large holes (other than portholes) are found replace burner.
5. If grill is to be stored, coat burner lightly with cooking oil. Wrap in protective cover to keep insects out. If not storing use following steps.
6. Reattach Regulator.
7. Replace cooking grid.
8. Before cooking again on grill, perform a *"Leak Test"* and *"Burner Flame Check"*.

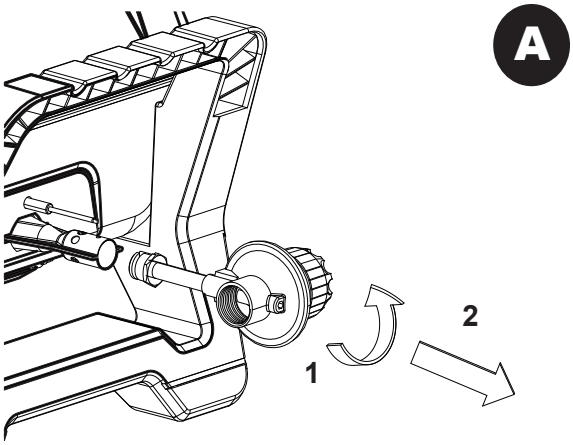

CAUTION

NATURAL HAZARD • SPIDERS

FACT: Sometimes spiders and other small insects climb into the burner tubes attached to the burner. The spiders spin webs, build nests and lay eggs. The webs or nests can be very small, but they are very strong and can block the flow of gas. Clean burner prior to use after storing, at the beginning of grilling season or after a period of one month not being used.

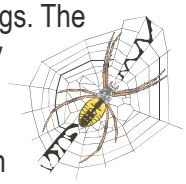

Spider guards are on the air intakes in an effort to reduce this problem, but it will not eliminate it! An obstruction can result in a "flashback" (a fire in the burner tubes). The grill may still light, but the obstruction does not allow full gas flow to the burner.

IF YOU EXPERIENCE THE FOLLOWING:

1. Smell gas.

2. Burner(s) will not light.

3. A small yellow flame from burner (should be blue).

4. Fire coming from around or behind control knob.

STOP!

Immediately turn off gas at LP cylinder!

SOLUTION:

Wait for grill to cool.

Follow the "*Cleaning the Burner Assembly*" instructions. Clean burner often. Use a 12" pipe cleaner to clean out the burner tube. You may also force a stream of water from a hose nozzle through burner tube to clean them.

General Grill Cleaning

- Do not mistake brown or black accumulation of grease and smoke for paint. Interiors of gas grills are not painted at the factory (and should never be painted). Apply a strong solution of detergent and water or use a grill cleaner with scrub brush on insides of grill lid and bottom. Rinse and allow to completely air dry. **Do not apply a caustic grill/oven cleaner to painted surfaces.**

Storing Your Grill

- Clean cooking surface.
- When LP cylinder is connected to grill, store outdoors in well-ventilated space and out of reach of children.
- Cover grill if stored outdoors.
- Store grill indoors ONLY if LP cylinder is turned off and disconnected, removed from grill and stored outdoors in well-ventilated space and out of reach of children.
- Leak test the grill after removing from storage and follow Cleaning Burner Assembly instructions before starting grill.
- Keep grill area clear and free from materials that burner(i.e. gasoline, propane or other flammable liquid or gas).
- Do not block holes in bottom or back of grill.

How To Tell If Meat Is Cooked Thoroughly

•Meat and poultry cooked in the appliance often browns very fast on the outside. Use only thawed meat and a meat thermometer to be sure food has reached a safe internal temperature, and cut into food to check for visual signs of doneness.

•We recommend food to be at least 40°F before cooking in your appliance.

•Whole poultry should reach 165° F. Juices should run clear and flesh should not be pink.

•Beef, veal and lamb steaks, roasts and pork chops can be cooked to 160° F.

•NEVER partially cook meat or poultry and finish cooking later. Cook food completely to destroy harmful bacteria.

•Use a meat thermometer to ensure proper internal food temperatures.

Food Safety

Food safety is a very important part of enjoying the outdoor cooking experience. To keep food safe from harmful bacteria, follow these four basic steps:

Clean: Wash hands, utensils, and surfaces with hot soapy water before and after handling raw meat and poultry.

Separate: Separate raw meats and poultry from ready-to-eat foods to avoid cross contamination. Use a clean platter and utensils when removing cooked foods.

Cook: Cook meat and poultry thoroughly to kill bacteria. Use a thermometer to ensure proper internal food temperatures.

Chill: Refrigerate prepared foods and leftovers promptly.

For more information call: USDA Meat and Poultry Hotline at 1-888-MPHOTLINE (888-674-6854) In Washington, DC

Or E-mail: mphotline.fsis@usda.gov

Or visit the USDA website at www.isitdoneyet.gov

USDA Recommended
Internal Cooking Temperatures

Ground Meat	
Beef, Pork, Veal, Lamb	160°F
Turkey, Chicken	165°F
Fresh Beef, Veal, Lamb	
Medium Rare	145°F
(let stand 3 minutes before cutting)	
Medium	160°F
Well Done	170°F
Poultry	
Chicken & Turkey, whole	165°F
Poultry Parts	165°F
Duck & Goose	165°F
Fresh Pork	
Medium Rare	145°F
(let stand 3 minutes before cutting)	
Medium	160°F
Well Done	170°F

Proper Grate Orientation

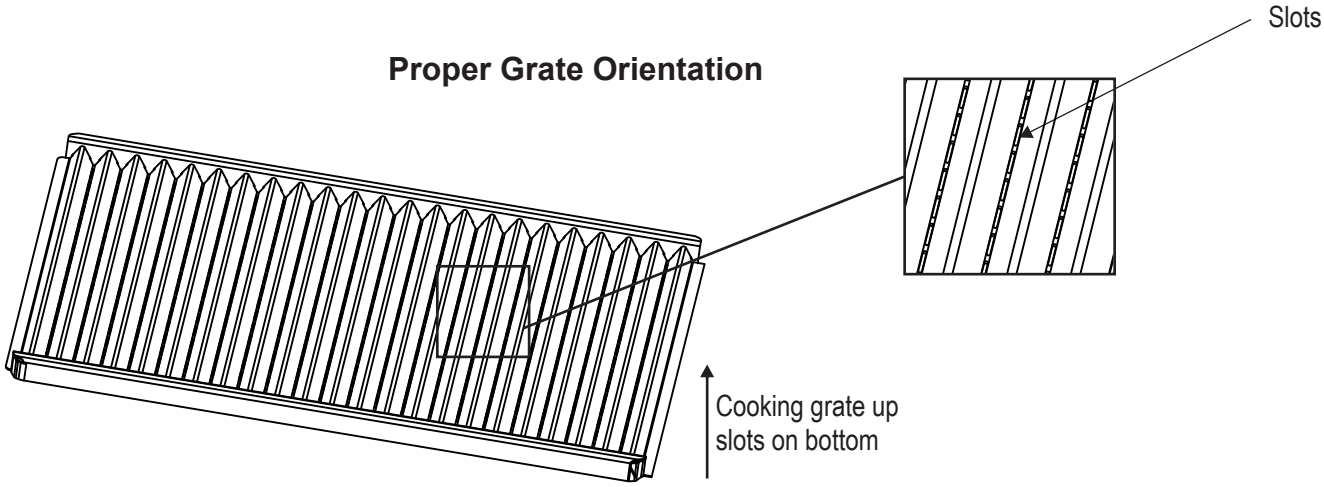

LIMITED WARRANTY

This warranty only applies to units purchased from an authorized retailer. Manufacturer warrants to the **original consumer-purchaser** only that this product shall be free from defects in workmanship and materials after c rrect assembly and under normal and reasonable home use for the periods indicated below beginning on the date of purchase*. The manufacturer reserves the right to require that defective parts be returned, postage and or freight pre-paid by the consumer for review and examination.

SCOPE OF COVERAGE	PERIOD OF COVERAGE	TYPE OF FAILURE COVERAGE
Stainless Burner	5 years from date of purchase*	PERFORATION, MANUFACTURING, AND MATERIAL DEFECTS ONLY
Firebox and Lid	5 years from date of purchase*	
All Other Parts	1 year from date of purchase*	

*Note: A dated sales reciept WILL be required for warranty service.

The original consumer-purchaser will be responsible for all shipping charges for parts replaced under the terms of this limited warranty.

This limited warranty is applicable in the United States and Canada only, is only available to the original owner of the product and is not transferable. **Manufacturer requires proof of your date of purchase. Therefore, you should retain your sales slip or invoice.** Registering your product is not a substitute for proof of purchase and the manufacturer is not responsible for or required to retain proof of purchase records.

This limited warranty applies to the functionality of the product ONLY and does not cover cosmetic issues such as scratches, dents, corrosions or discoloring by heat, abrasive and chemical cleaners or any tools used in the assembly or installation of the appliance, surface rust, or the discoloration of stainless steel surfaces. **RUST is not considered a manufacturing or materials defect.**

This limited warranty will not reimburse you for the cost of any inconvenience, food, personal injury or property damage.

ITEMS MANUFACTURER WILL NOT PAY FOR:

1. Shipping cost, standard or expedited, for warranty and replacement parts
2. Service calls to your home.
3. Repairs when your product is used for other than normal, single-family household or residential use.
4. Damage, failures, or operating difficulties resulting from accident, alteration, careless handling, misuse, abuse, fire, flood, acts of God, improper installation or maintenance, installation not in accordance with electrical or plumbing codes, or use of products not approved by the manufacturer.
5. Any food loss due to product failures or operating difficulties.
6. Replacement parts or repair labor costs for units operated outside the United States or Canada.
7. Pickup and delivery of your product.
8. Repairs to parts or systems resulting from unauthorized modifications made to the product.
9. The removal and/or reinstallation of your product.

DISCLAIMER OF IMPLIED WARRANTIES and LIMITATION OF REMEDIES

Repair or replacement of defective parts is your exclusive remedy under the terms of this limited warranty. In the event of parts availability issues, the manufacturer reserves the right to substitute like or similar parts that are equally functional.

Manufacturer will not be responsible for any consequential or incidental damages arising from the breach of either this limited warranty or any applicable implied warranty, or for failure or damage resulting from acts of God, improper care and maintenance, grease fire, accident, alteration, replacement of parts by anyone other than Manufacturer, misuse, transportation, commercial use, abuse, hostile environments (inclement weather, acts of nature, animal tampering), improper installation or installation not in accordance with local codes or printed manufacturer instructions.

THIS LIMITED WARRANTY IS THE SOLE EXPRESS WARRANTY GIVEN BY THE MANUFACTURER. NO PRODUCT PERFORMANCE SPECIFICATION OR DESCRIPTION WHEREVER APPEARING IS WARRANTED BY MANUFACTURER EXCEPT TO THE EXTENT SET FORTH IN THIS LIMITED WARRANTY. ANY IMPLIED WARRANTY PROTECTION ARISING UNDER THE LAWS OF ANY STATE, INCLUDING IMPLIED WARRANTY OF MERCHANTABILITY OR FITNESS FOR A PARTICULAR PURPOSE OR USE, IS HEREBY LIMITED IN DURATION TO THE DURATION OF THIS LIMITED WARRANTY.

Neither dealers nor the retail establishment selling this product has any authority to make any additional warranties or to promise remedies in addition to or inconsistent with those stated above. Manufacturer's **maximum liability**, in any event, shall not exceed the purchase price of the product paid by the original consumer.

NOTE: Some states do not allow an exclusion or limitation of incidenta or consequential damages, so some of the above limitations or exclusions may not apply to you. This limited warranty gives you specific legal rights as set foth herein. You may also have other rights which vary from state to state. In the state of California only, if refinishing or replacement of the product is not commercially practicable, the retailer selling this product or the Manufacturer will refund the purchase price paid for the product, less the amount directly attributable to use by the original consumer-purchaser prior to discovery of the nonconformity. In addition, in the state of California only, you may take the product to the retail establishment selling this product in order to obtain performance under this limited warranty.

If you wish to obtain performance of any obligation under this limited warranty, you should write to:
Consumer Relations
P. O. Box 1240
Columbus, GA 31902-1240

Consumer returns will not be accepted unless a valid Return Authorization is first acquired. Authorized returns are clearly marked on the outside of the package with an RA number and the package is shipped freight/postage pre-paid. Consumer returns that do not meet these standards will be refused.

WS_1 Rev03

PARTS LIST

Key	Qty	Description
A	1	FIREBOX
B	1	LEFT, GREASE TRAY RAIL
C	1	RIGHT, GREASE TRAY RAIL
D	1	BURNER, W/ ELECTRODE
E	1	VAPORIZER BAR
F	1	HEAT SHIELD
G	2	LATCH ASSEMBLY
H	1	WIND BARRIER
I	1	GREASE TRAY
J	1	LEG, LEFT
K	1	LEG, RIGHT
L	1	COOKING GRATE
M	1	LID
N	1	HANDLE
O	1	LOGO PLATE
P	1	TEMPERATURE GAUGE
Q	1	LID HINGE HARDWARE
R	1	IGNITOR
S	1	GROUND CONNECTOR
T	1	REGULATOR

NOT Pictured

...	1	GRATE CLEANING TOOL
...	1	PRODUCT GUIDE, ENGLISH
...	1	PRODUCT GUIDE, SPANISH (OPTIONAL)
...	1	PRODUCT GUIDE, FRENCH (OPTIONAL)
...	1	GRILLING GUIDE, ENGLISH
...	1	GRILLING GUIDE, FRENCH (OPTIONAL)

PARTS DIAGRAM

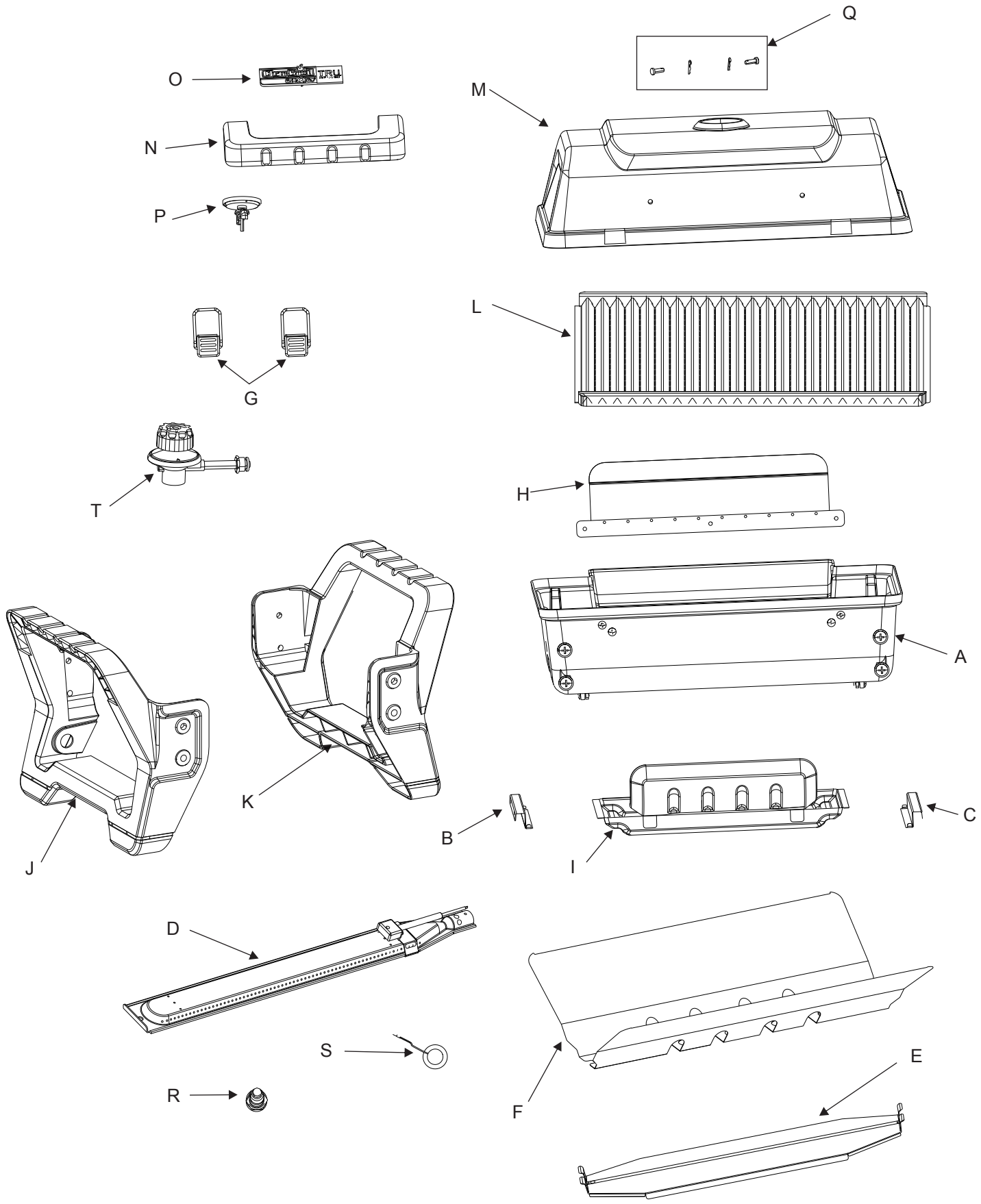

DANGER: **If a gas leak cannot be stopped, or a fire occurs due to gas leakage, call the fire department.**

Emergencies	Possible Cause	Prevention/Solution
Gas leaking from LP cylinder.	•Mechanical failure due to rusting or mishandling.	•Replace LP cylinder.
Gas leaking between LP cylinder and regulator control valve connection.	•Improper installation, connection not tight, failure of rubber seal.	• Remove regulator control valve from cylinder and visually inspect for damage. See LP Cylinder Leak Test and Connecting Regulator control valve to the LP Cylinder.
Fire coming through at burner/regulator control valve connection	• Fire in burner tube section of burner due to blockage.	•Turn off control knob. Leave lid open to allow flames to die down. After fire is out and grill is cold, remove burner and inspect for spider nests or rust. See Natural Hazard and Cleaning the Burner Assembly pages.
Grease fire or continuous excessive flames above cooking surface.	• Too much grease buildup in trough.	• Turn off control knob and LP cylinder valve. Leave lid open to allow flames to die down. After cooling, clean food particles and excess grease from inside firebox area, grease cup, and other surfaces.

Troubleshooting

Problem	Possible Cause	Prevention/Solution
Burner(s) will not light using ignitor. *Continued on next page.*	**GAS ISSUES:** • Burner not engaged with regulator control valve.	• Make sure regulator control valve is positioned inside of burner tube.
	• Obstruction in burner.	• Ensure burner tube is not obstructed with spider webs or other matter. See cleaning section of Use and Care.
	• No gas flow.	• Make sure LP cylinder is not empty.
	• Regulator Control Valve and LP cylinder valve not fully connected.	• Remove LP cylinder. Clean threads on LP cylinder and regulator control valve.
	• Regulator Control Valve knob does NOT pop up in the OFF position.	• Replace regulator control valve.
	• Regulator Control Valve knob does NOT stay down in ON positions.	• Replace regulator control valve.
	ELECTRICAL ISSUES: •Electrode cracked or broken; “sparks at crack.”	• Replace electrode(s).
	•Electrode and burner are wet	Wipe dry with a cloth.
	•Wire and/or electrode covered with cooking residue.	•Clean wire and/or electrode with rubbing alcohol and clean swab.
	•Wires are loose or disconnected.	•Reconnect wires or replace electrode/wire assembly.
	•Wires are shorting (sparking) between ignitor and electrode.	•Replace ignitor wire/electrode assembly.

REV00

Troubleshooting (*continued*)

Problem	Possible Cause	Prevention/Solution
Burner(s) will not light using ignitor.	**PIEZO PUSH-BUTTON AND ROTARY:** •Push-button sticks at bottom. •Sparking between ignitor and electrode.	•Replace ignitor. •Inspect wire insulation and proper connection. Replace ignitor wires / electrode assembly if insulation is broken.
Burner(s) will not match light.	•See **"GAS ISSUES:"** on previous page. •Match will not reach using match holder. •Improper method of match-lighting.	•Use long-stem match (fireplace match). •See "Match-Lighting" section of Use and Care.
Low flame, drop in gas flow.	•Out of gas.	•Check for gas in LP cylinder.
Flames blow out.	•High or gusting winds. •Low on LP gas.	•Turn front of grill to face wind or increase flame height. •Replace LP cylinder.
Flare-up.	•Grease buildup. •Excessive fat in meat. •Excessive cooking temperature.	•Clean trough / burner and inside of grill/firebox. •Trim fat from meat before grilling. •Adjust (lower) temperature accordingly.
Persistent grease fire.	•Grease trapped by food buildup in trough	•Turn regulator control knob to OFF. Turn gas off at LP cylinder. Leave lid in closed position and let fire burn out. After grill cools, remove and clean all parts.
Flashback... (fire in burner tube(s)).	•Burner and/or burner tubes are blocked.	•Turn knob to OFF. Clean burner and/or burner tubes. See burner cleaning section of Use and Care.

Char-Broil®
Grilling's Juicy Little Secret™

Please register your product online at:
Registre su producto en línea en:
Veuillez enregistrer votre produit à l'adresse:

www.charbroil.com/register

(If you register online, you do not need to send in this registration card.)
(Si registra en línea, no es necesario enviar esta tarjeta de registro.)
(Si vous enregistrez votre produit en ligne, il n'est pas nécessaire d'envoyer la carte d'enregistrement.)

PLEASE FILL OUT THIS CARD AND ATTACH A COPY OF YOUR SALES RECEIPT. RETURN IT WITHIN 10 DAYS OF PURCHASE. FOR WARRANTY SERVICE PROOF OF PURCHASE WILL BE REQUIRED. THIS WARRANTY IS NON-TRANSFERABLE.

LLENE ESTA TARJETA Y DEVUELVALA DENTRO DE LOS 10 DIAS DE LA COMPRA. PARA EL SERVICIO DE GARANTIA ES NECESARIO QUE PRESENTE SU COMPROBANTE DE COMPRA. CONSERVE LA FACTURA. ESTA GARANTIA ES INTRANSFERIBLE.

VEUILLEZ COMPLETER CETTE CARTE ET LA RETOURNER DANS LES 10 JOURS SUIVANT L'ACHAT. POUR OBTENIR LE SERVICE SOUS GARANTIE, UNE PREUVE D'ACHAT DOIT ETRE PRESENTEE. VEUILLEZ CONSERVER VOTRE FACTURE. LA PRESENTE GARANTIE N'EST PAS TRANSFERABLE.

Required | Necesario | Exigé

~ PLEASE PRINT ~ IMPRIMA POR FAVOR ~ S'IL VOUS PLAÎT IMPRIMER ~

* 1 **First Name | Nombre | Prénom** _____ **Initial | Inicial | Initiale** _____ **Last Name | Apellido | Nom de Famillie** _____

Address (number & street) **| Dirección** (número y calle) **| Adresse** (numéro et rue) _____ **Apt Number | Nº de apart | Nº d'appt.** _____

City | Cludad | Ville _____ **State | Estado | Province** _____ **Zip Code | Código Zip | Code Postal** _____

* 2 **E-mail Address | Dirección de correo electrónico | Adresse électronique** _____

* 3 **Phone Number | Número telefónico | Numéro de téléphone** _____

* 4 **Model Number | Número de modelo | Numéro de modèle** _____

Serial Number | Número de serie| Numéro de série _____

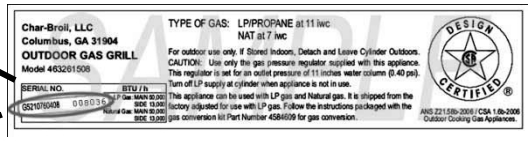

STICKER ON PRODUCT

6 **Date of Purchase | Fecha de compra | Date de l'achat** _____

7 **Store Name | Nombre de la tienda | Nom du magasin** _____

$ _____

8 **Purchase Price | Precio de compra | Prix d'achat**

9 **Your Gender | Sexo | Sexe:**

- ☐ Male | Masculino | Masculin
- ☐ Female | Femenino | Féminin

10 **Which product are you registering?**
¿Qué producto está registrando?
Quel produit enregistrez-vous?

1. ☐ Gas Grill | Parrilla a gas | Gril au gaz
2. ☐ Electric Grill | Parrilla eléctrica | Gril électrique
3. ☐ Smoker | Ahumador | Fumoir
4. ☐ Charcoal Grill | Parrilla a carbón | Barbecue au charbon
5. ☐ Cooker/Fryer | Cocina/freidora | Cuiseur/Friteuse
6. ☐ Other | Otro | Autre

* 5 *Attach copy of your sales receipt here.*

Adjunte aqui la copia de su recibo de compra

Veuillez attacher une copie de votre reçu ici.

Mail to: / Enviar a: / Envoyer à :

Char-Broil Warranty Registration
P.O. Box 1240
Columbus, GA 31902-1240

We respect your privacy. | Respetamos su privacidad. | Nous respectons votre vie privée.

- If you prefer not to receive special offers and promotions from Char-Broil, please check here: ☐
- Marque aquí si no desea recibir ofertas y promociones especiales de Char-Broil:
- Si vous préférez ne pas recevoir d'informations concernant des offres spéciales et des promotions de Charbroil, veuillez cocher ici:

Thank you for completing this questionnaire. | Gracias por completer este cuestionario. | Merci d'avoir bien voulu remplir ce questionnaire.

THANK YOU
FOR YOUR RECENT PURCHASE FROM

Char-Broil®
Grilling's Juicy Little Secret™

CHECK OUT THESE GREAT FEATURES ON OUR WEBSITE

- Valuable product information
- Inspiring grilling accessories
- Reliable customer support
- Delicious recipes and tips from chefs
- Exciting events and promotions
- And much more!

REGISTER YOUR PRODUCT TO RECEIVE A

SPECIAL OFFER

CHARBROIL.COM/REGISTER