LONGER

# Quick Start Guide

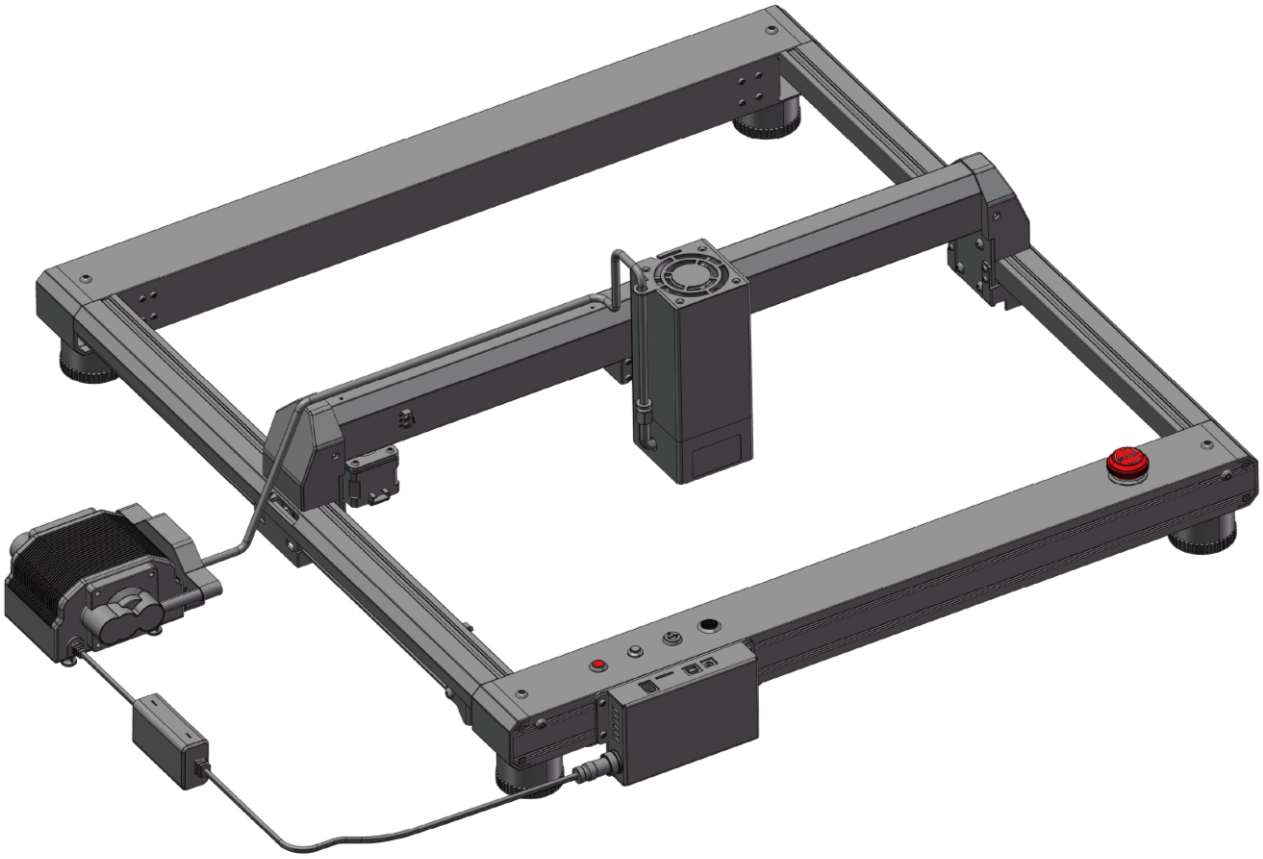

LONGER LASER ENGRAVER **LASER B1 20W/30W**

Thank you for choosing our products.
Please read this manual carefully before use.

Please reference more details on digital manual in TF card about the operation of Laser Engraver and installation of LaserGRBL or LightBurn.

Please join our Facebook Group:
LONGER Laser Engraver Official Group
Email: Support@longer3d.com

If you have any question, please feel free to contact us as above.

*Copyright © Shenzhen Longer 3D Technology Co.,Ltd. All Rights Reserved

Dear customer,

Thank you for choosing LONGER products **LASER B1**.

Maybe you are familiar with the engraving machine or have bought a similar engraving machine before, we still highly recommend that you read this manual carefully. The installation techniques and precautions in this manual can help you avoid any unnecessary damage or frustration.

# Contents

A. Safety Precautions ..... 1

B. Product Information ..... 8

(1) Specifications ..... 8

(2) Components Introduction ..... 10

(3) Packing List ..... 11

(4) Machine assembly ..... 12

C. Machine Operation ..... 17

(1) Power On ..... 17

(2) LaserGRBL Software Operation ..... 18

(3) LightBurn Software Operation ..... 21

(4) Firmware Upgrading ..... 30

(5) APP Operation ..... 32

(6) Air valve instructions ..... 41

D. FAQ ..... 46

Question 1: Are there recommended engraving and cutting parameters? ..... 46

Question 2: The engraved pattern appears vibration, or is not closed? ..... 46

Question 3: How about the warranty policy? ..... 46

Question 4: How to maintain LASER B1 laser module? ..... 49

Question 5: How to solve alarm 2 error or hard limit? ..... 51

Question 6: How to solve the upload error of the APP? ..... 51

# A. Safety Precautions

(1) The **LASER B1** engraves and cuts materials by the means of a high-energy diode laser beam.

The hazards associated with a high-energy diode laser beam include the possibility of fires, generation of hazardous and/or irritating toxic fumes, but more importantly damage to eyes and skin.

(2) Laser engravers are divided into several internationally valid classes based on their performance and the risk of injury. The **LASER B1** falls into the Class IV (Class 4 IEC standard focus on the American FDA classification).

| Laser class | Class Definition |
|---|---|
| Class I | Class I laser radiation is not considered hazardous. |
| Class IIa | Class IIa laser radiation is not considered hazardous if viewed for any period of time less than or equal to $1x10^3$ seconds but is considered a chronic viewing hazard for any period of time greater than $1x10^3$ seconds. |
| Class II | Class II laser radiation is considered a chronic viewing hazard. |
| Class IIIa | Class IIIa laser radiation is, depending upon the irradiance, either an acute in-trabeam viewing hazard or chronic viewing hazard. If viewed directly with optical instruments, Class IIIa laser radiation is classified as an acute viewing hazard. |

| | |
|---|---|
| Class IIIb | Direct Class IIIb laser radiation is considered an acute hazard to the skin and eyes. |
| Class IV | Class IV laser radiation is considered an acute hazard to the skin and eyes from both direct and scattered radiation. |

The high energy laser beam can cause severe eye damage, including blindness and serious skin burns.

Improper use of the controls and modification of the safety features may cause serious eye injury and burns.

Please wear Personal Protective Equipment (PPE, Safety Glasses are designed to filter specific ranges of laser wavelength. The **LASER B1** Safety Glasses provided are specific for LONGER Laser Module;) when using the machine.

- DO NOT look directly into the laser beam.
- DO NOT aim the laser beam at reflective surfaces.
- DO NOT operate the laser without PPE protection for all persons nearby in the proximity of the **LASER B1**.
- DO NOT allow unsupervised access to the **LASER B1** to children.
- DO NOT allow access near the **LASER B1** to pets.
- DO NOT modify or disable any safety features of the laser system.
- DO NOT touch the high energy laser beam.

(3) We strongly recommend placing the machine in a well-ventilated room, and at the same time, the door of the room has a sealing effect, and the windows have curtains, to effectively avoid looking directly at the laser beam and some smoke and steam , Particles, and other highly toxic substances. At the same time, you can pay attention to the LONGER products (cover) in the follow-up.

(4) The high-energy diode laser beam can produce extremely high temperatures and significant amounts of heat as the substrate material is burned away while engraving and cutting. Some materials are prone to catch fire during cutting operations creating flame, fumes, and smoke.

(5) Although the **LASER B1** has a built-in flame sensor, this technology should NOT be considered 100% accurate and should be seen only as a warning system.

During the working process of **LASER B1**, if a flame is found, the machine will stop the laser and make a sound to indicate abnormal conditions. Please pay attention to the working status of the machine.

during operation to ensure that any flare ups/ flame is properly contained and extinguished.

It is strongly recommended that a Fire Extinguisher should be

located within proximity to the **LASER B1**. Extinguishers should be halogen or multi-purpose dry chemical. Alternatively, or in conjunction with the Fire Extinguisher it is recommended a “Fire Extinguisher Ball” is positioned beside the **LASER B1**.

- DO NOT use materials that are highly flammable, explosive or produce toxic by-products.
- DO NOT remove material from the cutting bed before it has cooled.
- DO NOT leave the **LASER B1** operating unattended.
- ALWAYS clean up clutter, debris, and flammable materials in the laser **LASER B1** bed after use.
- ALWAYS keep a properly maintained fire extinguisher nearby.
- DO NOT allow the USB cable to contact with the laser Beam.
- DO NOT allow the 24V power cable to contact with the laser Beam.

(6) During the engraving process of the **LASER B1** laser engraving machine, different materials may produce different pungent odors. Always use **LASER B1** laser engravers in open and well-ventilated areas.

(7) Environmental requirements

Temperature requirement: 10° C~30° C, humidity requirement: 20%~50%, this **LASER B1** laser engravers can work normally

within this range; beyond this range, this laser engravers will be unable to achieve the best engraving results.

(8) Below a list of some of the most known hazardous materials that the user SHOULD NOT attempt to engrave or cut on. If a material is not in this list, do not consider it to be safe to use. Obtain the Safety Data Sheet (SDS) from the material's manufacturer when handling unknown materials.

| Material | Reason to avoid engraving / cutting it |
|---|---|
| PVC (Poly Vinyl Chloride) | PVC will emit Chlorine gas when laser cut, or laser engraved. This toxic gas can ruin the optics and motion control system of the laser engraver, in fact, engraving or cutting PVC is a sure way of voiding the warranty of your laser engraver |
| Lexan / Thick Poly-carbonate | Lexan not only cuts poorly but it also catches on fire very easily. The window of the laser engraving machine is usually made from polycarbonate because it does a very good job of attracting infrared radiation., which is the frequency of light the engraver uses when cutting and engraving materials. This makes the laser cutter quite ineffective in cutting polycarbonate materials |
| ABS | ABS melts upon exposure to a laser beam as opposed to vaporizing which would be the ideal reaction needed for laser engraving. Instead of leaving a crisp image, ABS will melt and leave a gooey deposit on the surface. |
| HDPE | HDPE melts and catches on fire easily upon exposure to a laser beam. |

| | |
|---|---|
| Polystyrene Foam | Only very thin pieces can be laser cut but for the most part, polystyrene catches on fire and melts when exposed to a laser beam |
| Fiberglass | Fiberglass is made from two materials: glass and epoxy resin. The best method of marking glass is etching while epoxy resin can emit toxic fumes upon laser engraving. These two reasons make fiberglass a bad choice for a laser engraving material |
| Polypropylene | polypropylene melts and catches on fire easily and then the melted material continues to burn thereby forming pebble-like drips that harden on the surface |
| Coated Carbon Fiber | Coated carbon fiber emits noxious fumes. Additionally, carbon fiber can be cut albeit with some fraying but this is not the case when it is coated. |

(9) The **LASER B1** has built in technology and algorithms to keep its users and the surrounding environment safe. This said it is important to understand the **LASER B1** is not a toy and should be operated with care and respect.

(10) Important information regarding your **LASER B1**

**LASER B1** use 24V DC power system:

- Never Use a different voltage Power Adapter. Make sure to use DC 24V 5A and 7.5A adapters for 20 W and 30W respectively.
- When using an alternative Power Adapter, the Voltage should always be 24V, Make sure to use DC 24V 5A

and 7.5A adapters for 20W and 30W respectively. Higher amperage output Power Adapter can be used without risk of damage to your LASER B1.On inserting the power barrel into your motherboard, it is possible that a small spark is visible. This is NOT hazardous to your machine and is caused by the 24V power inrush. If you prefer to avoid this, connect the power barrel to your motherboard first, then connect your power adapter to the mains electricity plug.

- Once the **LASER B1** detects 24V present you will see the motherboard emit a light red glow on the LED of the Motherboard. This mean the motherboard is powered.
- If when plugging your Power Adapter barrel to your Motherboard and the Power adapter to mains power a green LED does not turn on, please verify your power adapter is receiving Mains Power.

# B. Product Information

## (1) Specifications

| Laser B1 20W | |
|---|---|
| Working Area | 450x440mm(17.72x17.32inch) |
| Power Adapter Input Voltage (AC) | AC110 - 240V 50/60Hz |
| Power Adapter Output Voltage (DC) | DC 24V 5A |
| Power Max Consumption | 120W |
| Packaging Size | 742x557x124 mm (29.2x21.9 x4.9 in) |
| Packaging Weight | 9.6kg |
| Machine Size Assembled | 727x668x239 mm (28.6x26.3x9.4 in) |
| Operating Temperature | -20 – 50℃ |
| Laser Module Model | Laser B1 20W |
| Laser Technology | Four Diode Laser with FAC |
| Wavelength | 450 - 460 nm |
| Max Power Input | DC 24V 3.2 A |
| Optical Power Output | 20-22W |
| Focus Type | 50mm Fixed Focus |
| Dot Size at Optimal Focus | 0.08 x 0.15mm |
| Laser Class | FDA Class IV, or Class 4 IEC standard |
| Applicable Material | Engraving:<br>Plywood, Basswood, Hardwood, Pinewood, Acrylic, Kraft paper, Stainless steel, Aluminum alloy, Ceramics, etc.<br>Cutting: Basswood, Acrylic, Bamboo, Kraft paper, etc. |
| Laser B1 30W | |
| Working Area | 450x440mm(17.72x17.32inch) |

| | |
|---|---|
| Power Adapter Input Voltage (AC) | AC110 - 240V 50/60Hz |
| Power Adapter Output Voltage (DC) | DC 24V 7.5 A |
| Power Max Consumption | 180W |
| Packaging Size | 742x557x124 mm (29.2x21.9x4.9 in) |
| Packaging Weight | 9.7kg |
| Machine Size Assembled | 727x668x244 mm (28.6x26.3x 9.7 in) |
| Operating Temperature | -20 – 50℃ |
| Laser Module Model | Laser B1 30W |
| Laser Technology | Six Diode Laser with FAC |
| Wavelength | 450 - 460 nm |
| Max Power Input | DC24V 4.5 A |
| Optical Power Output | 33-36W |
| Focus Type | 50mm Fixed Focus |
| Dot Size at Optimal Focus | 0.08 x 0.15mm |
| Laser Class | FDA Class IV, or Class 4 IEC standard |
| Applicable Material | Engraving:<br>Plywood, Basswood, Hardwood, Pinewood, Acrylic, Kraft paper, Stainless steel, Aluminum alloy, Ceramics, etc.<br>Cutting: Basswood, Acrylic, Bamboo, Kraft paper, etc. |
| Software | |
| Software | LaserGRBL (free), LightBurn (paid) |
| Operating System | LaserGRBL: Windows<br>Lightburn: Windows, MacOS, Linux |
| Input Image Format | jpg,bmp,png,dxf,svgai,tiff,etc |
| Connection type | USB cable, Micro SD Card, Wi-Fi |

## (2) Components Introduction

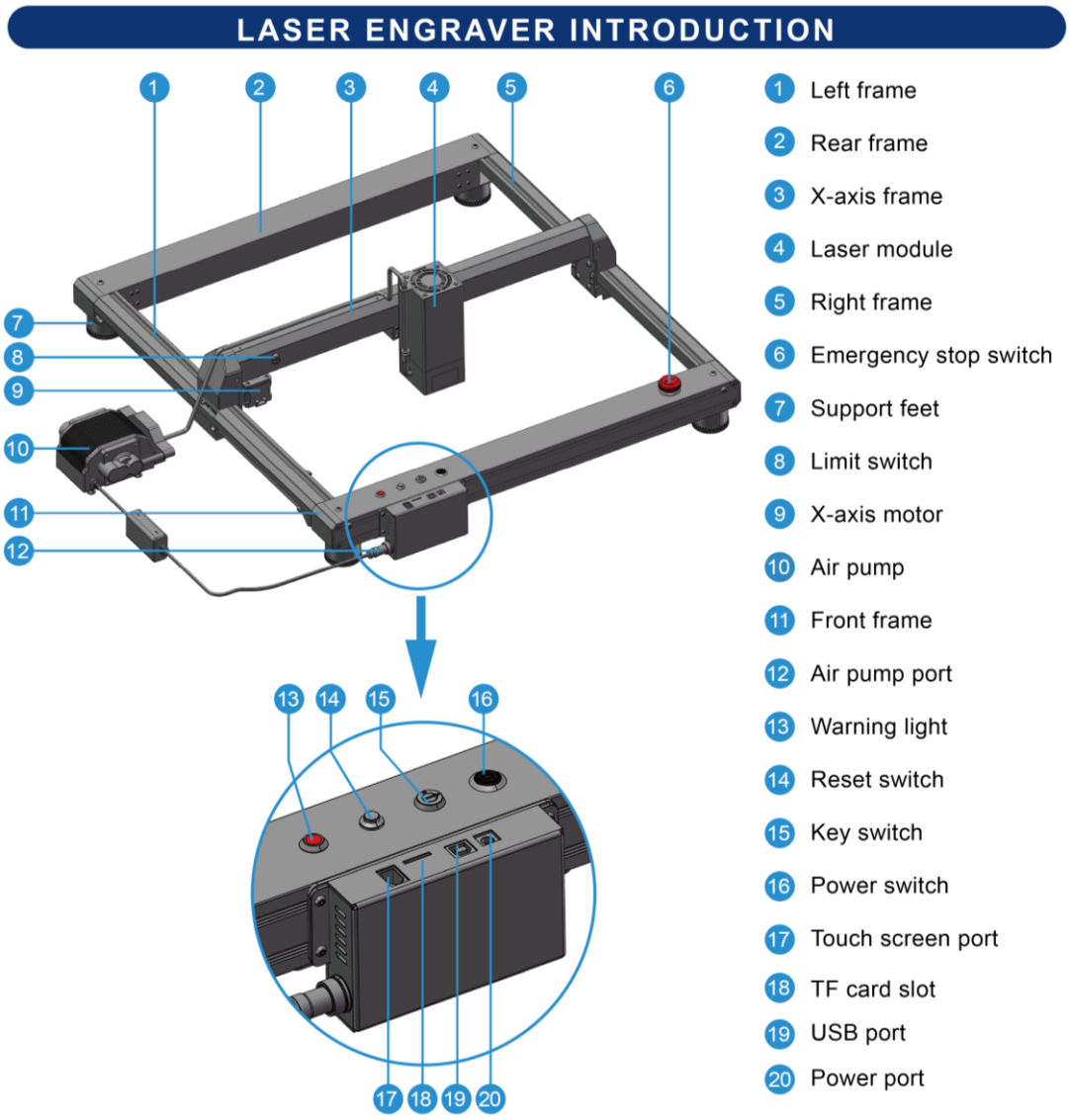

## (3) Packing List

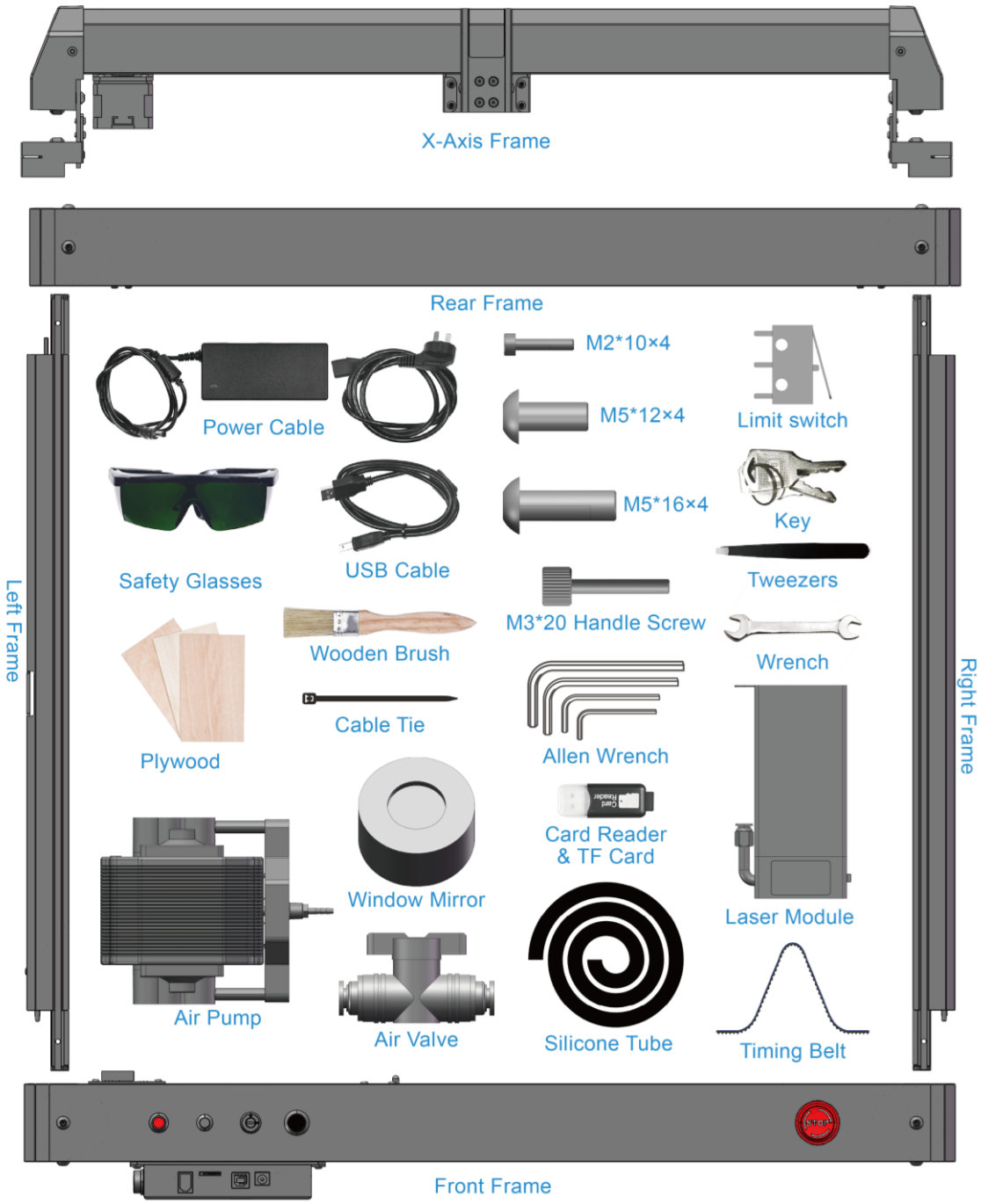

## (4) Machine assembly

The machine step-by-step assembly process is described in the document “LASER B1 Quick Start Guide”. Please follow the guide to assemble machine.

- During the machine assembly, if there is any unclear place, please refer to the video “LASER B1 Quick Start Guide”.
- Each unit of the engraving machine has been inspected and tested. Therefore, in some cases, very small traces may be left on the profile and the metal shell. These will not affect the quality. It is normal that it does not affect normal engraving. Thank you very much for your understanding.
- Be cautious during assembly as some parts may have sharp edges.
- If you have any questions after receiving the product, please contact our customer service first.

## INSTALLATION STEPS

1

Prepare:

Left frame, right frame, X-axis frame

Place the left frame, right frame, and X-axis frame as shown, and mount the X-axis frame to the left frame and right frame ▼

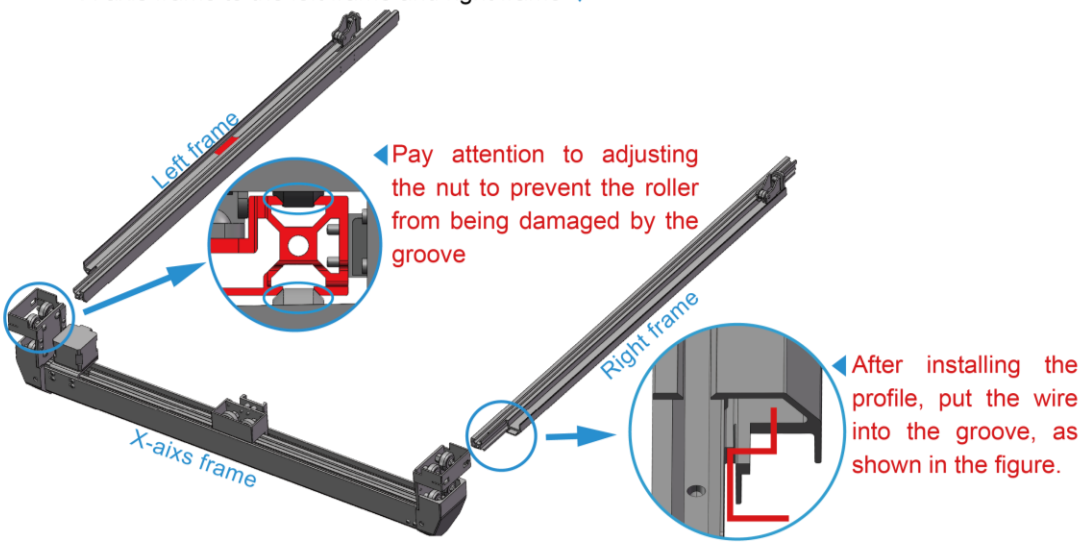


2

Prepare:

M5*12 Screws x 4, M5*16 Screws x 4, Front frame, Rear frame

First, pre-lock the M5*12 screws. Then, pre-lock the M5*16 screws. Finally tighten the M5*12 and M5*16 screws ▼

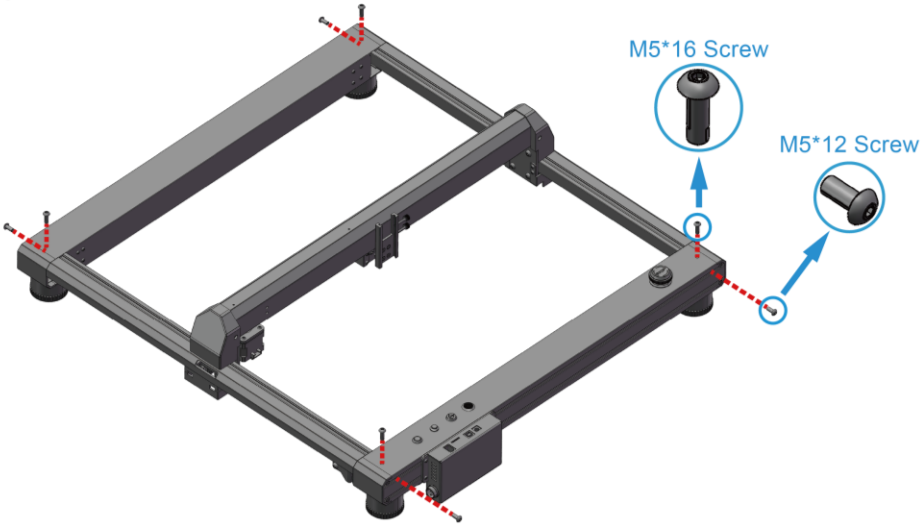

## 3

Prepare:
Timing belt × 2
Install the belt with the gears facing in and the smooth side facing out

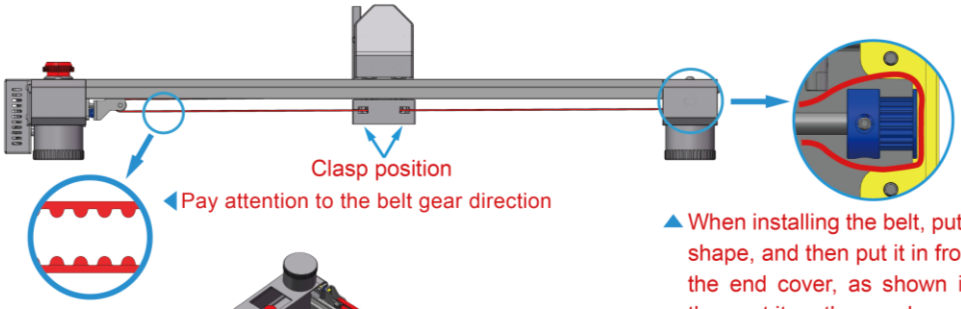


When installing the belt, put it into an arc shape, and then put it in from the side of the end cover, as shown in the figure; then put it on the synchronous wheel

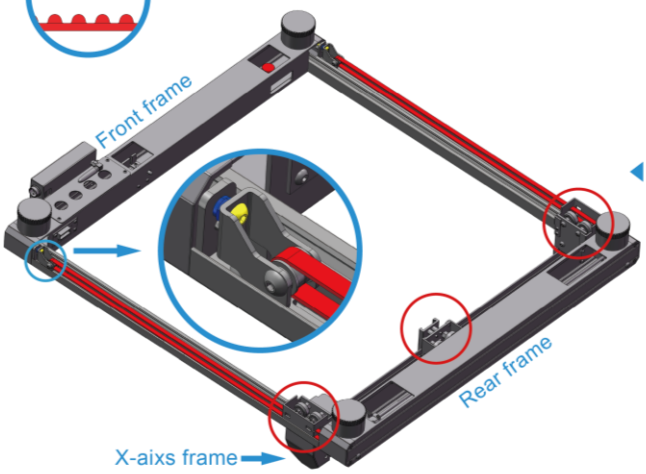


Push the X-axis frame to the bottom of the Y-axis and hold it there. Tighten the yellow screw in the picture until there is some tension in the belt, then tighten the blue nut. Take care that the belt is not too loose or too tight and make sure the X-axis frame is not tilted.

Check the tightness of the rollers on the X-axis and Y-axis. If the rollers slip, use the wrench to tighten them. Then move the X-axis and Y-axis to ensure that they are not stuck or loose.

## 4

Prepare:
Laser module, M3*20 handle screw

First install the laser module on the X-axis frame, then tighten the M3*20 handle screw to fix the laser module

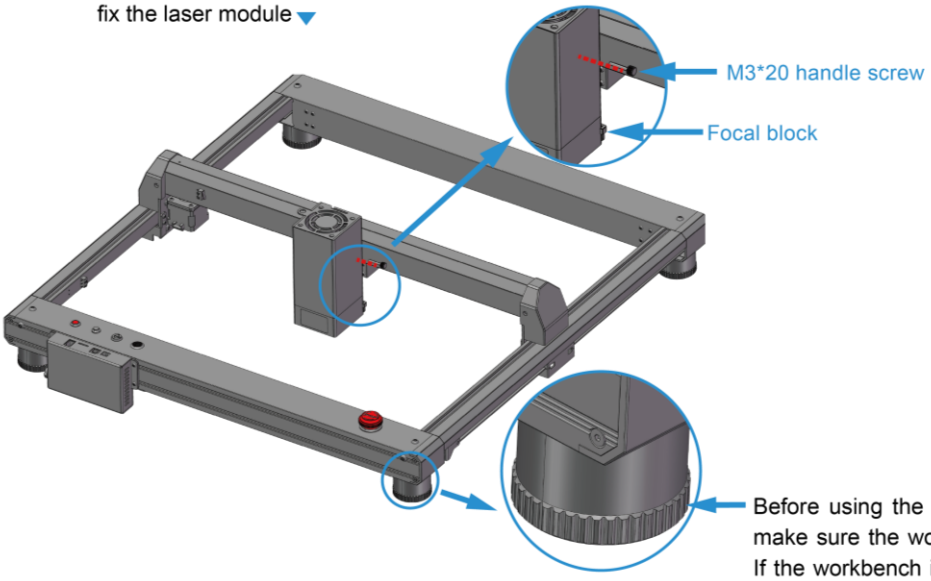


Before using the laser engraver, make sure the workbench is flat. If the workbench is not level, the height can be adjusted by rotating the support feet

## 5

Prepare:

Limit Switch × 2, M2*10 Screws x 4

Install X-axis limit switch and Y-axis limit switch ▼

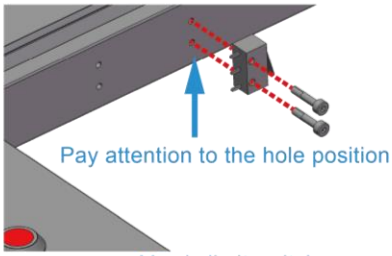


Y axis limit switch

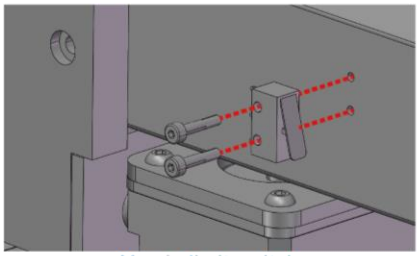

X axis limit switch

## 6

Install connection cables

There are 6 cables to be installed, including 2 limit switch cables, 2 motor cables, 1 laser module cable, and 1 adapter board terminal cable ▼

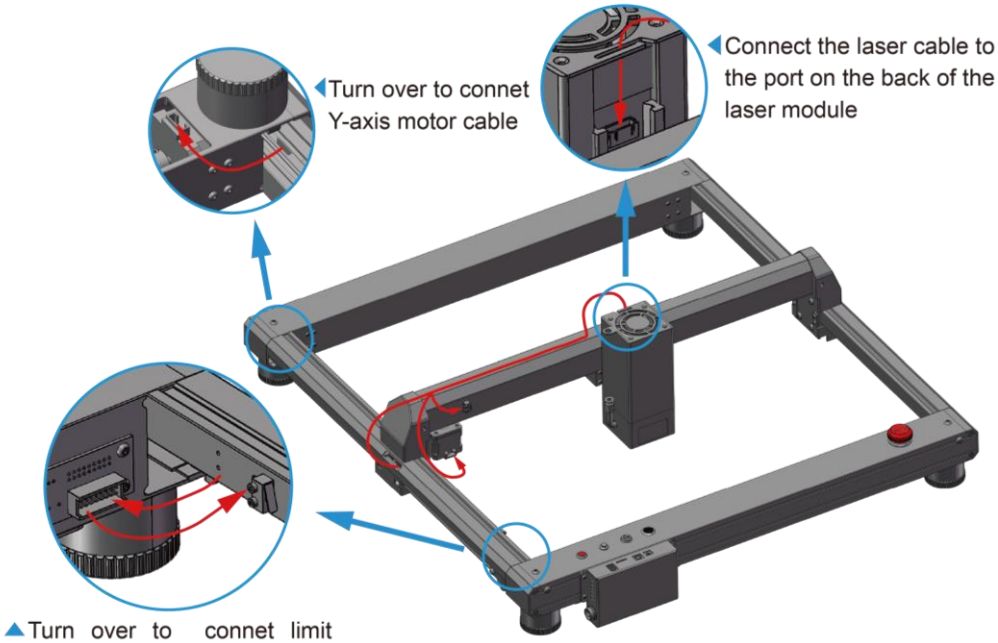


▲Turn over to connet limit switch cable and adapter board terminal cable, The marked line of the terminal on the adapter board faces up

## 7

Prepare:

Air pump， Silicone Tube, Cable tie, Key

First, install the air pump, silicone tube and connecting cable, then move the laser module to the upper right corner, and fix the silicone tube and connecting cable together with two Velcro tapes on the X axis; then use a cable tie to secure the remaining silicone Tube and cable fastened together again

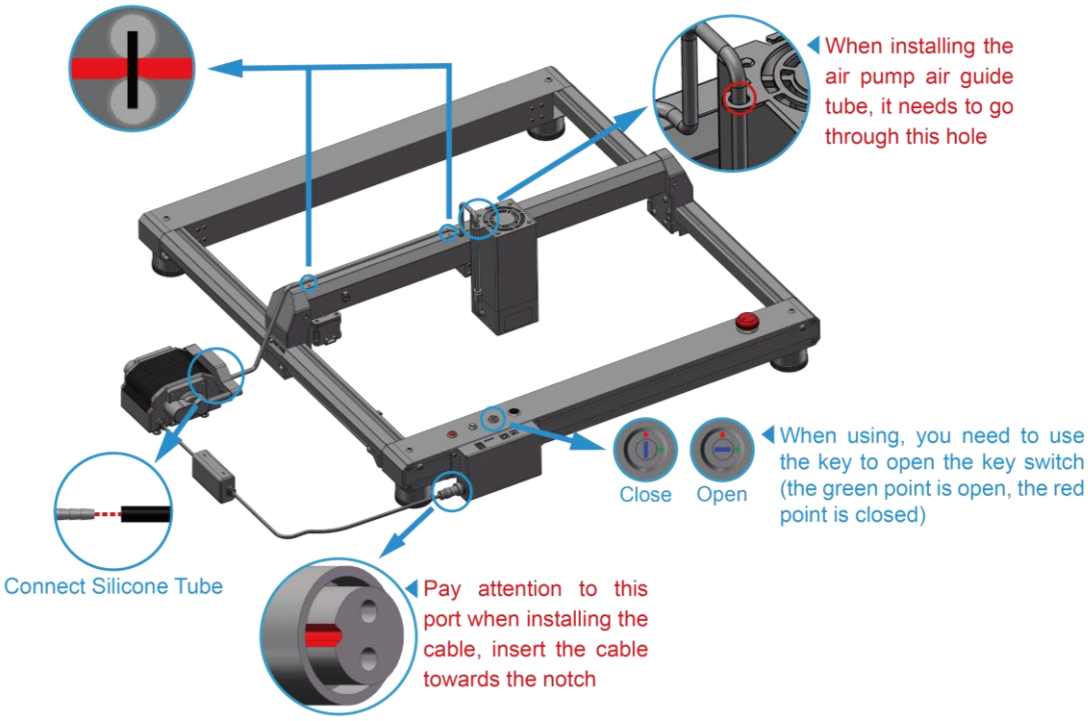


Tip: After the motor cables are connected, please manually move the X or Y axes slowly and DO NOT manually move the axes quickly , otherwise it will cause damage to the motherboard

## 8

Adjust laser focus

Pull out the focusing block, loosen the M3*20 handle screw, move the laser module down, tighten the M3*20 handle screw when the bottom of the focusing block touches the plywood, and close the focusing block

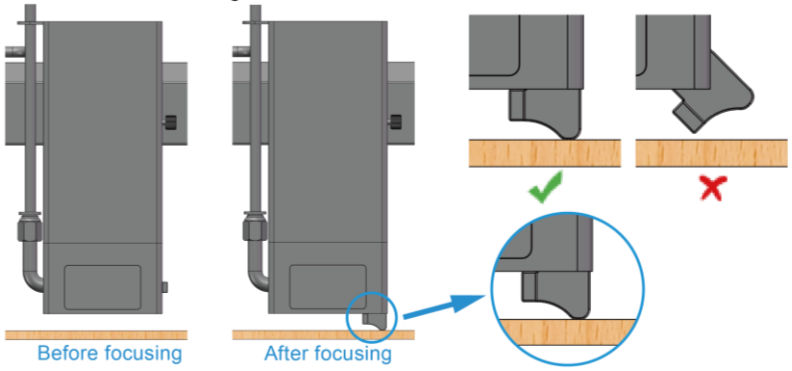


**MORE INFORMATION**

Support Email : support@longer3d.com

Facebook ID: longer3dprinter

Facebook Group: Longer Laser Engraver Official Group

Youtube channel: Longer 3D

# C. Machine Operation

## (1) Power On

a) Find the adapter and power cable and connect them. Please Make sure to use DC 24V 5A and 7.5A adapters for 20W and 30W respectively.

b) Connect the power cord to the power supply and connect the other end of the adapter to the power port of the motherboard.

c) Connect the computer and the engraving machine through a USB computer (or insert a Micro SD card).

d) Turn ON your **LASER B1** by press the power switch (To Turn OFF your **LASER B1** by press the power switch once again.)

## (2) LaserGRBL Software Operation

LaserGRBL is an easy-to-use and fully free software for laser engraver only running on Windows.

**Download**

a) Find LaserGRBL software in attached SD card(path: /software), Or download from the link: https://lasergrbl.com/download/

b) Double-click the software installation package to start the software instalation, and keep clicking Next>until theinstallation is complete.

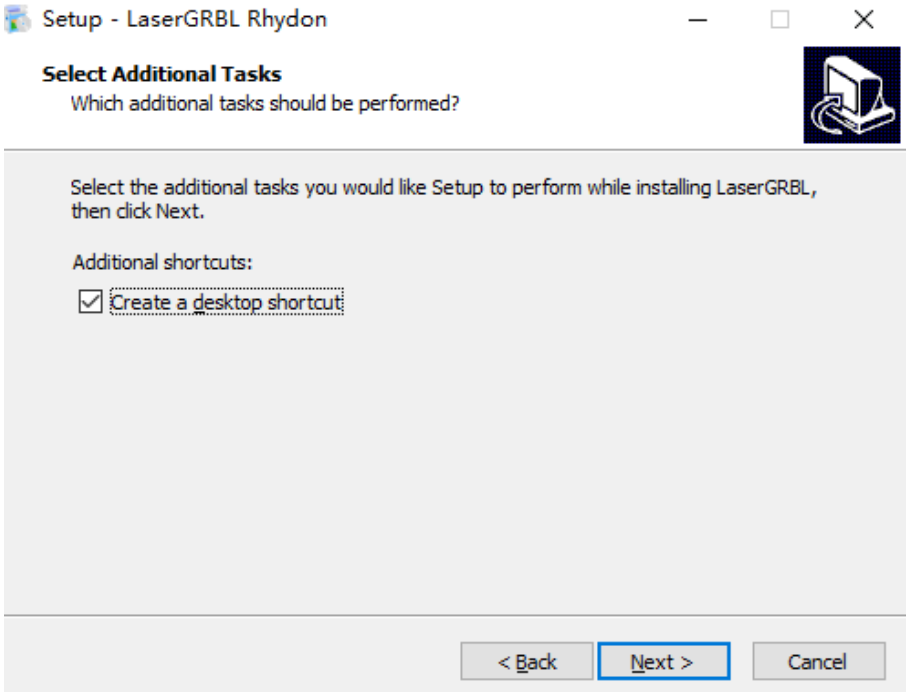


c) After installing laserGRBL, power up the **LASER B1**, press the power switch button, and connect the laser engraver and computer via USB cable.

## Usage

a) Open LaserGRBL, select correct port(depend on your PC), baud rate: 115200. Then click connect button.

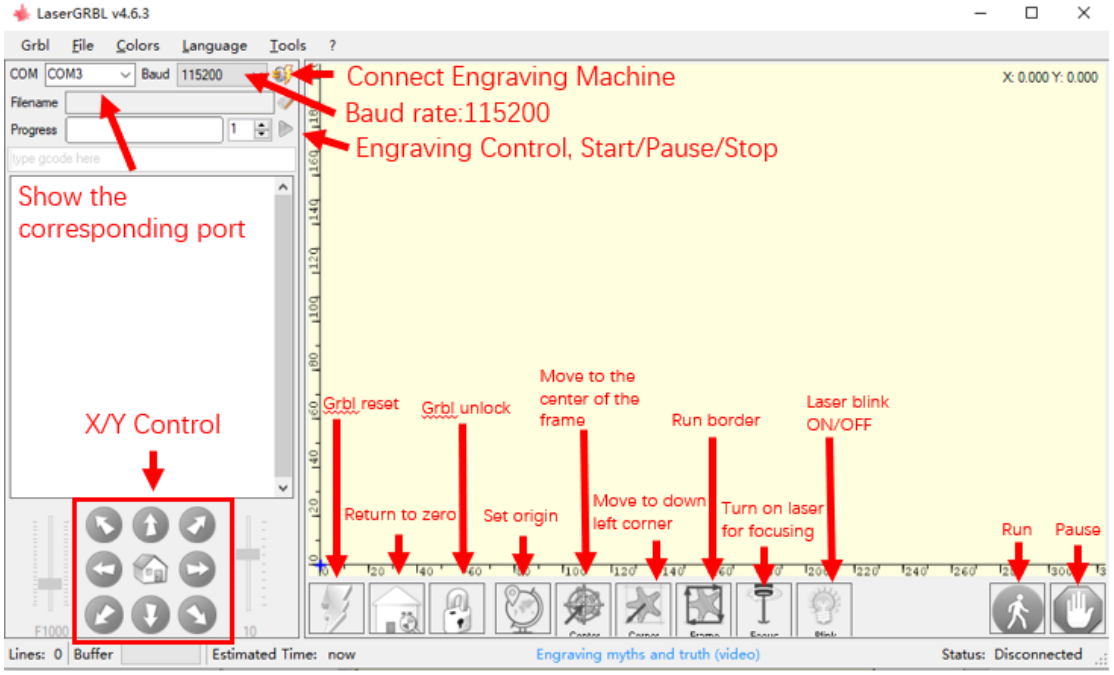


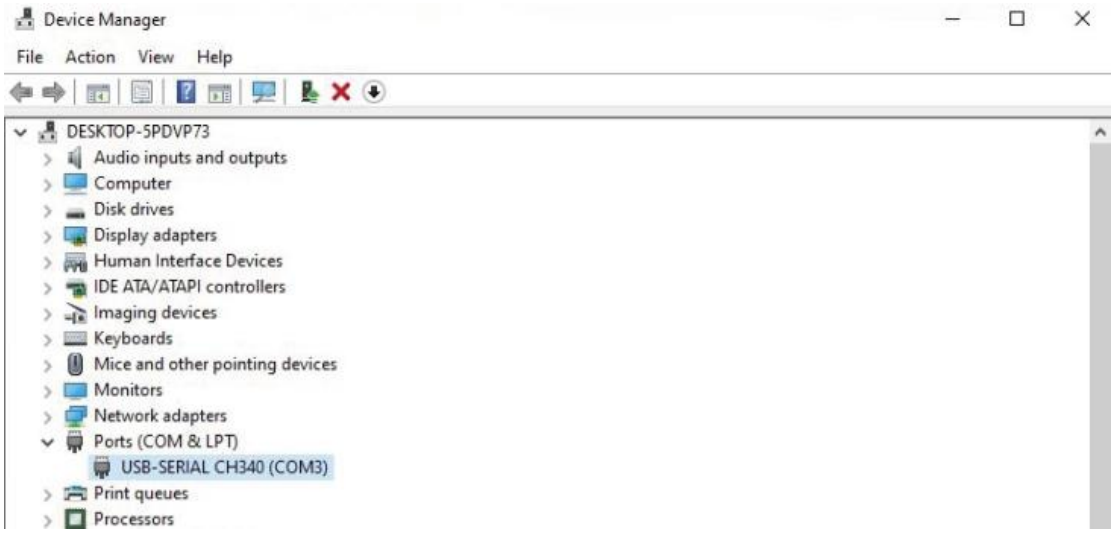


b) If you cannot find correct port, please install CH340 driver manually by click Menu >> Tools >> install CH340 Driver to install the driver, and restart the computer after installation to connect.

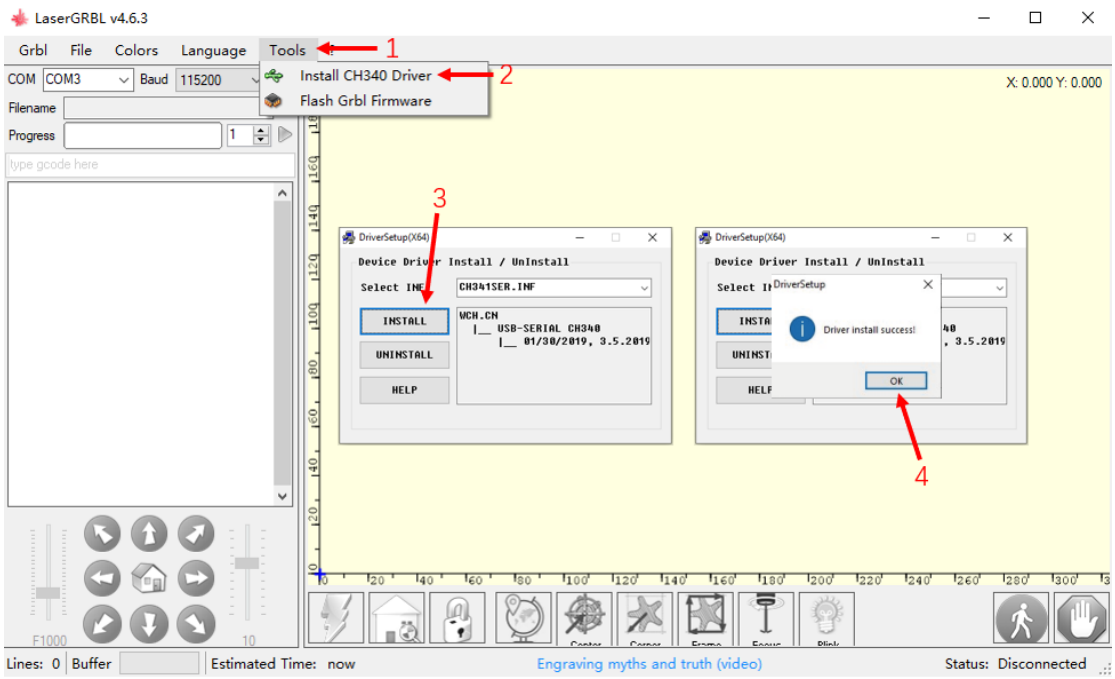


c) Open file and set parameters

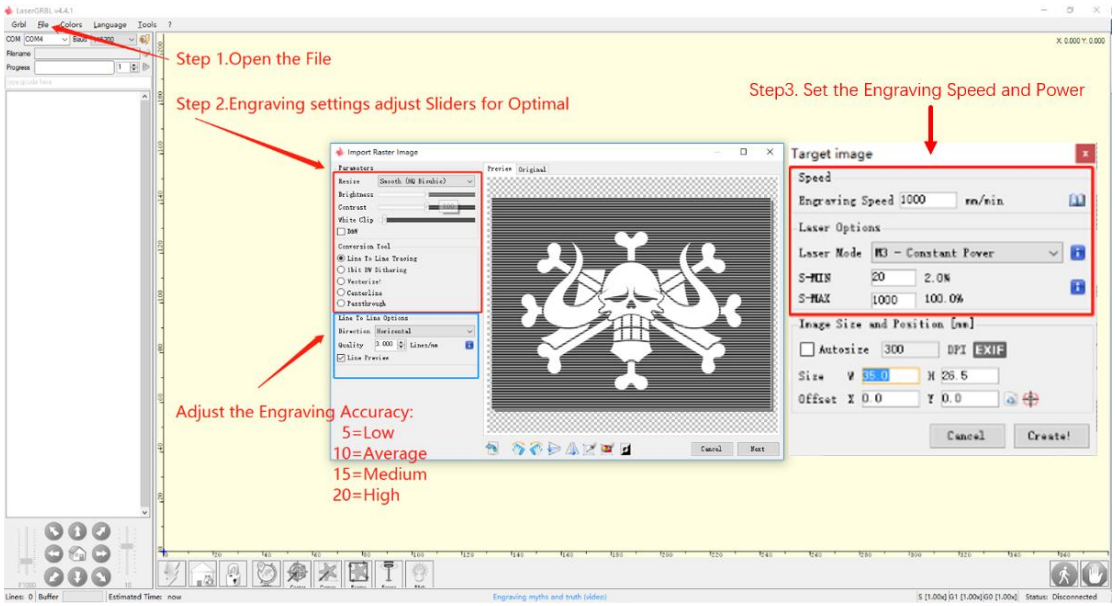


d) Start to engrave

i. Place a board under the laser, then calibrate the laser.

ii. Move the laser head to the place you want.

iii. Click “Run frame” button to check the work frame.

iv. Click button to start engraving.

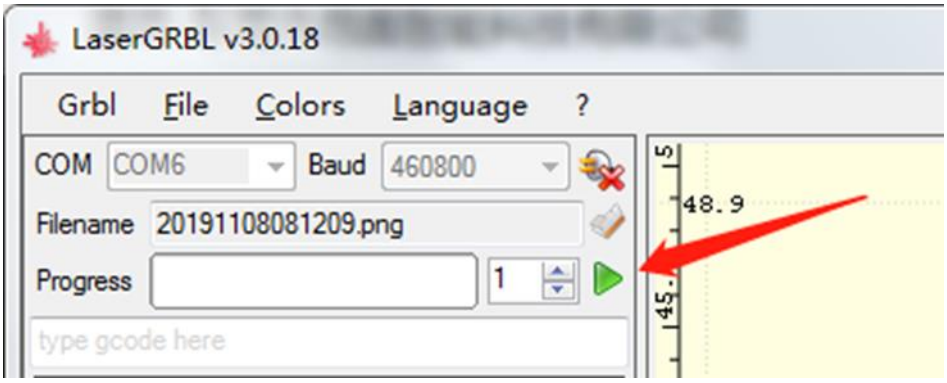


v. Or you can save gcode file to SD card by click “File” >> “Quick Save” for offline working.

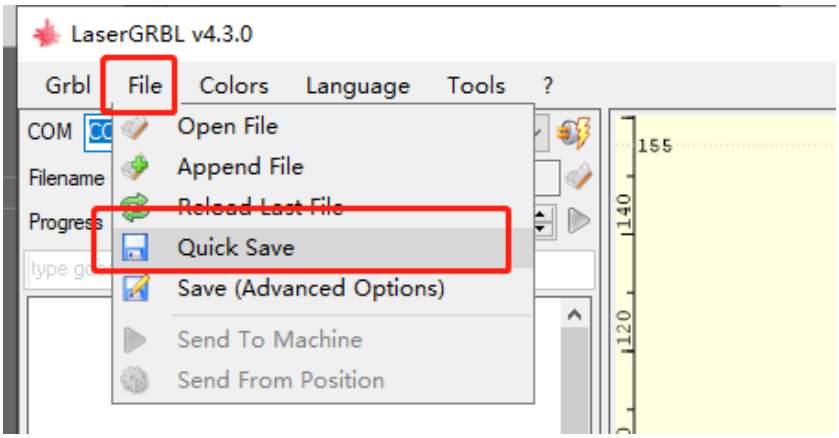


More help information about LaserGRBL, please refer to the link: https://lasergrbl.com/usage/0

## (3) LightBurn Software Operation

LightBurn is professional software for engraver, a charging software running on Windows, MacOS, and Linux. It provides a trial period.

You could pay for it afterward if you like it.

**Setup**

a) Find Lightburn software in SD card(path: /software) came with the package. Or just download from the link: https://lightburnsoftware.com/download/

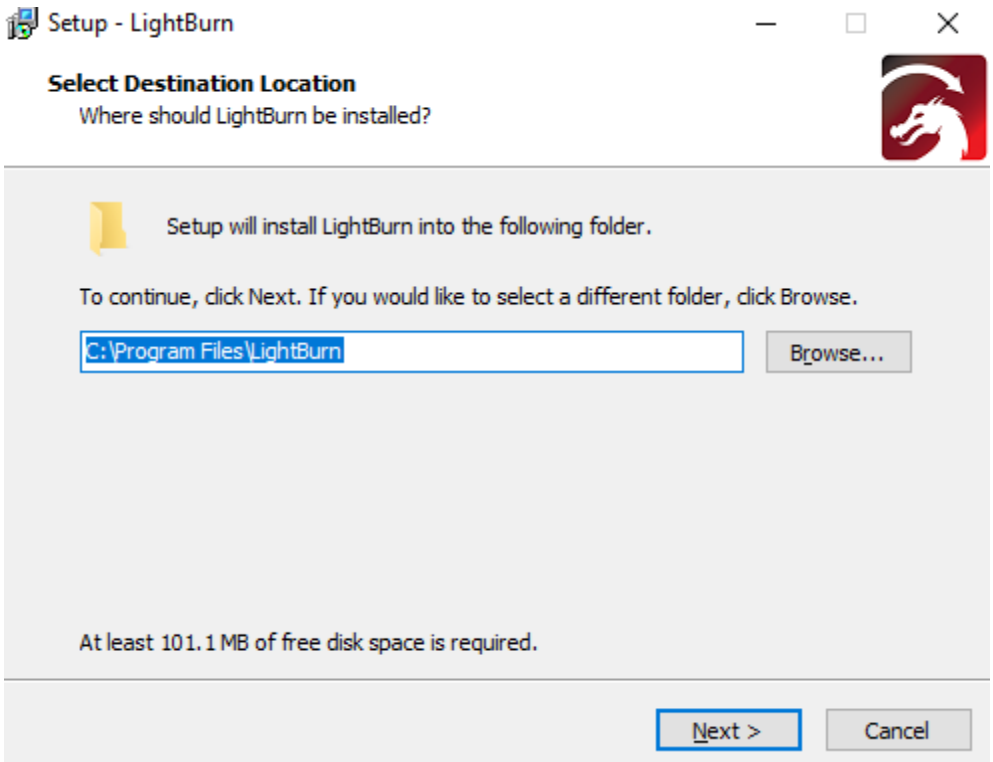


b) After installing Lightburn, power up the **LASER B1**, press the Power Switch button, and connect the laser engraver and computer via USB cable.

c) For the first time launching LightBurn, it will prompt a “New Device Wizard” for help you setup machine.

Click “Create Manually”

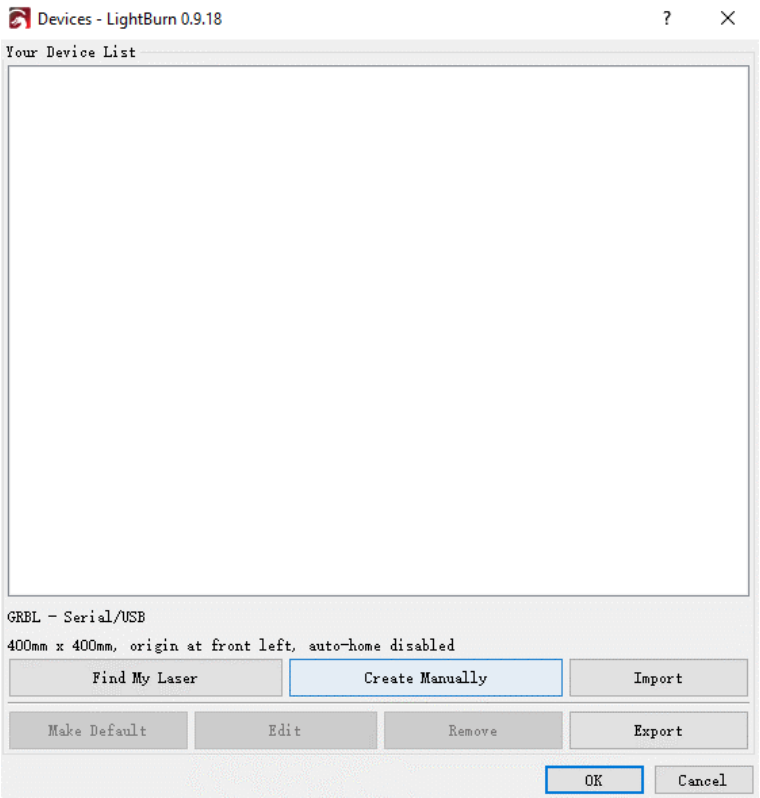


d) Select GRBL form the list, then click “Next” button

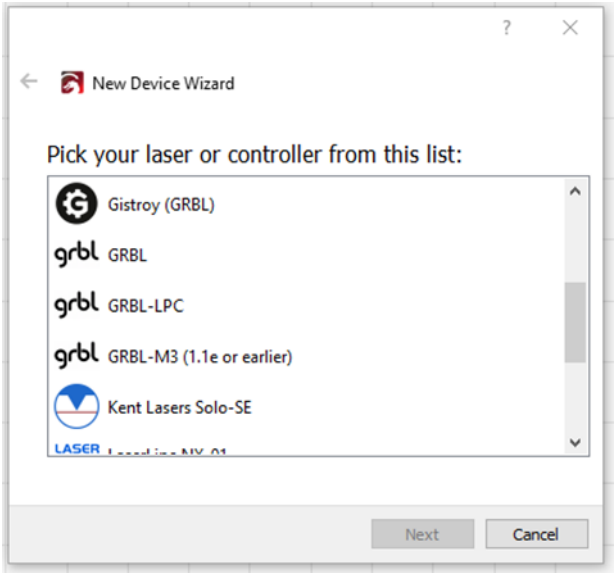


e) Select Serial/USB and press “Next” button.

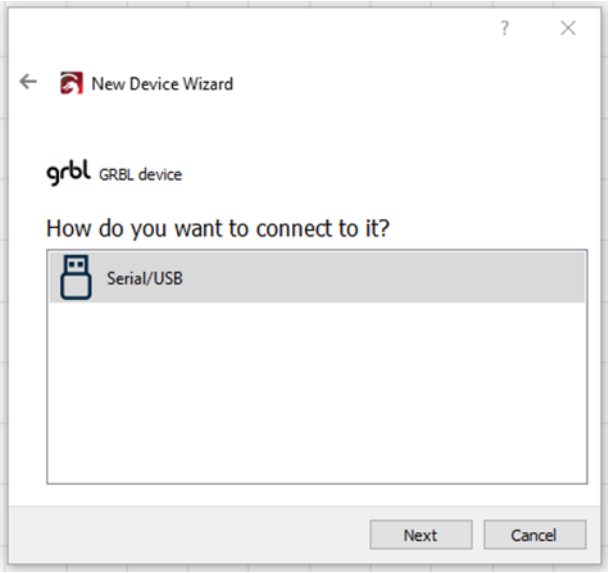


f) Fill your Device Name, X, Y axis, then click “Enter” button

Name: **LASER B1**

**X = 450**

**Y = 440**

g) Select “Front Left” as your Origin X,Y and activate “Auto ‘Home’”, then click “Next” button.

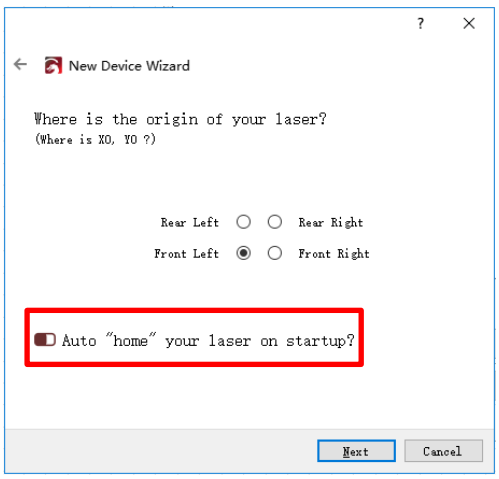


The automatic home function is turned on by default, if you do not want the engraver to automatically home when power on, it is recommended to turn off this function.

h) Select **LASER B1** and press Make Default. Your **LASER B1** is ready to be used in LightBurn software.

## Usage

a) Main interface

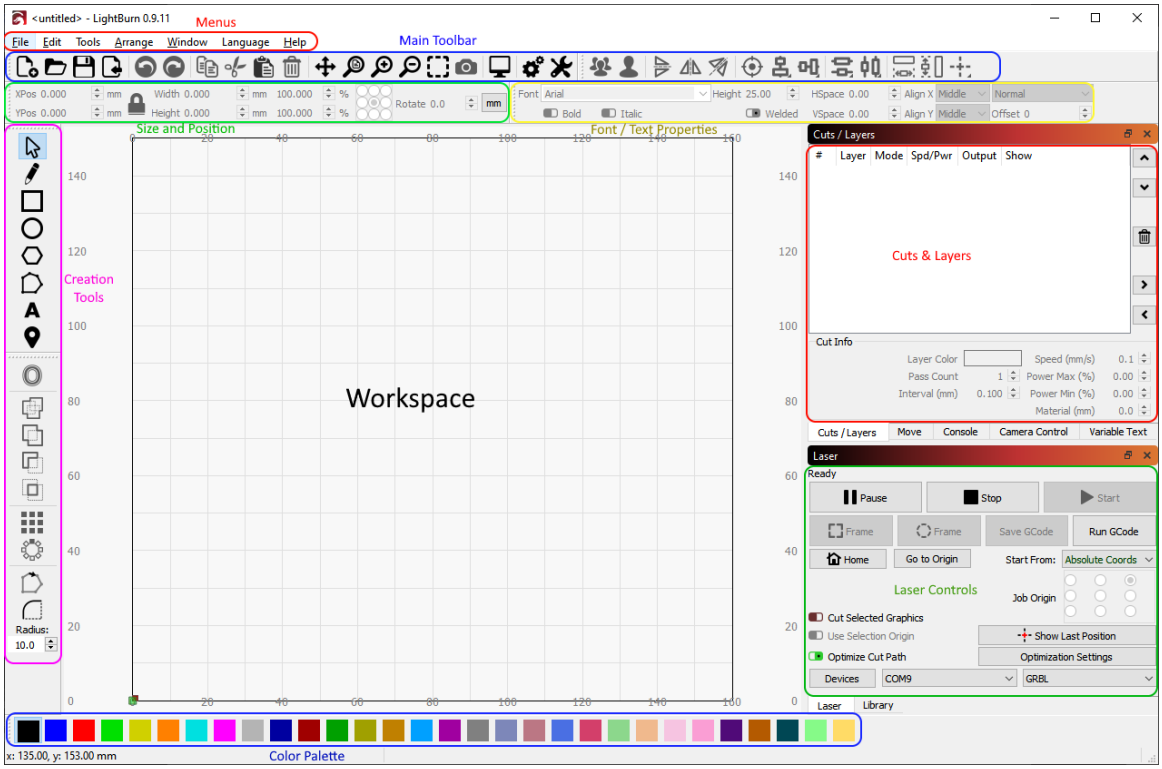


b) Select correct port (depends on your PC), then the **LASER B1** is connected to the computer.

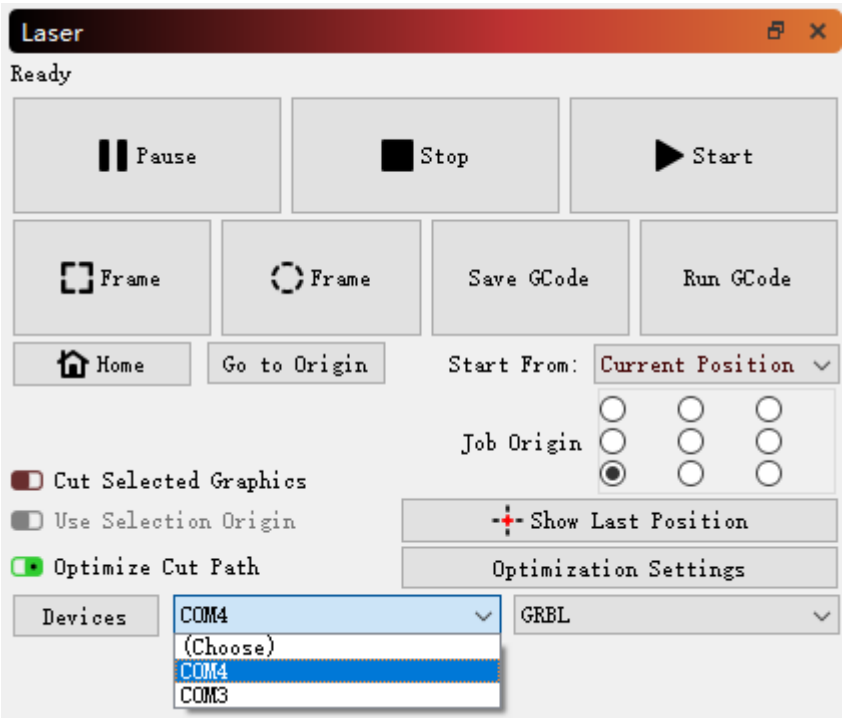

c) Click Menu “File” >> “Import image from disk.” Or just use draw tool on left column to design your own pattern.

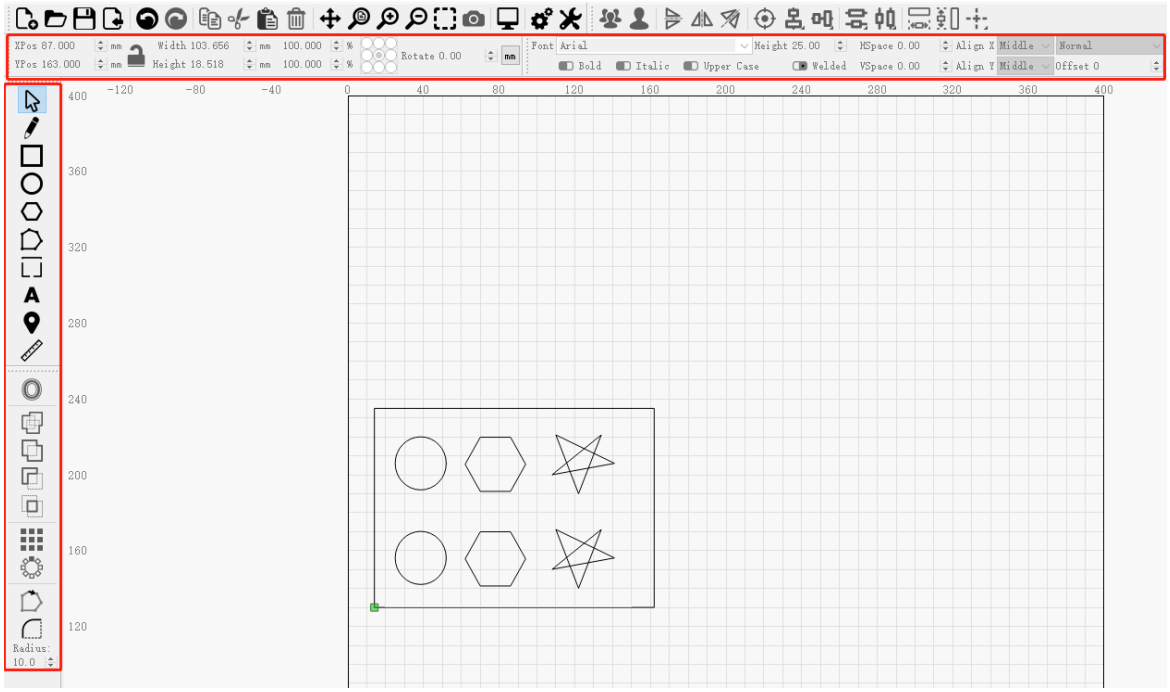


d) Set the name, speed, maximum power, mode, and other parameters in the cutting/layer; (engraving function and cutting function are only different in speed, power. Normally, the cutting speed parameter is slower).

e) After placing the board under the laser, click **Frame** to check the laser path whether is completely inside of the board.

f) Click “Start” to start to work.

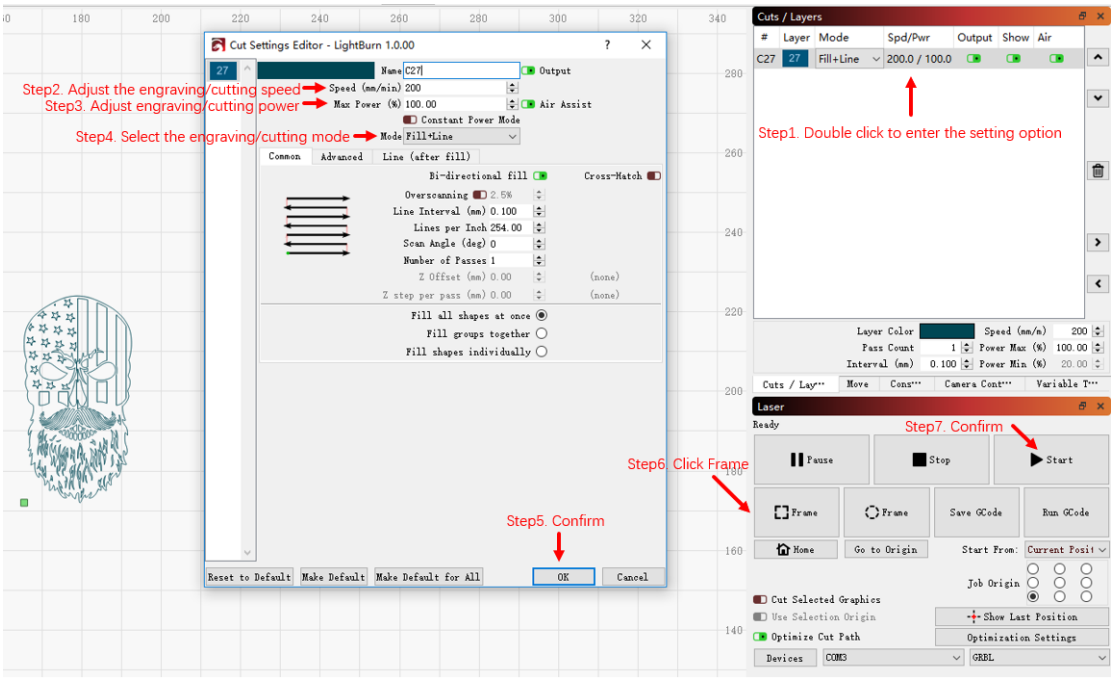


g) Or you can save gcode file to SD card by click “Save GCode” button in Laser panel for offline working

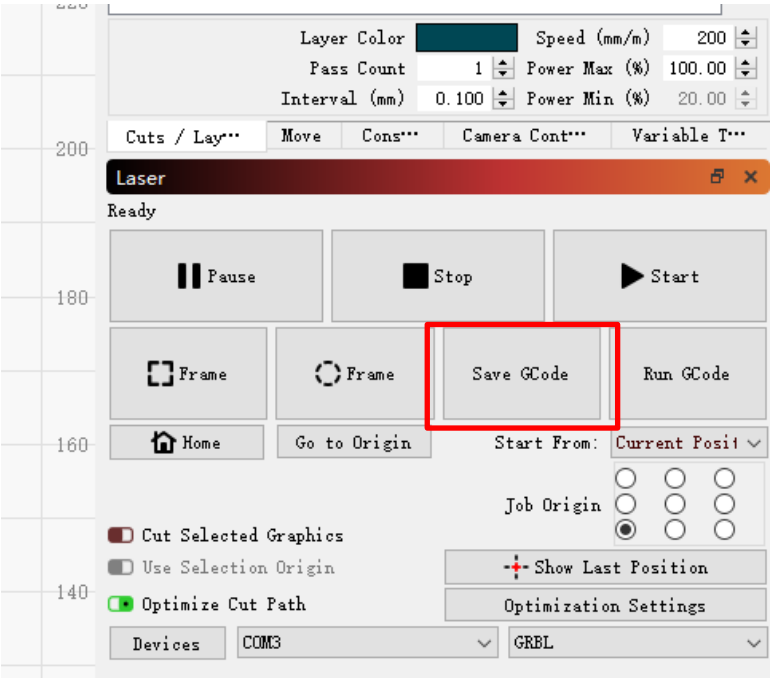


More help information about LightBurn, please refer to the link: https://lightburnsoftware.com/pages/tutorials

## h) Function description

### Cut Setting Editor

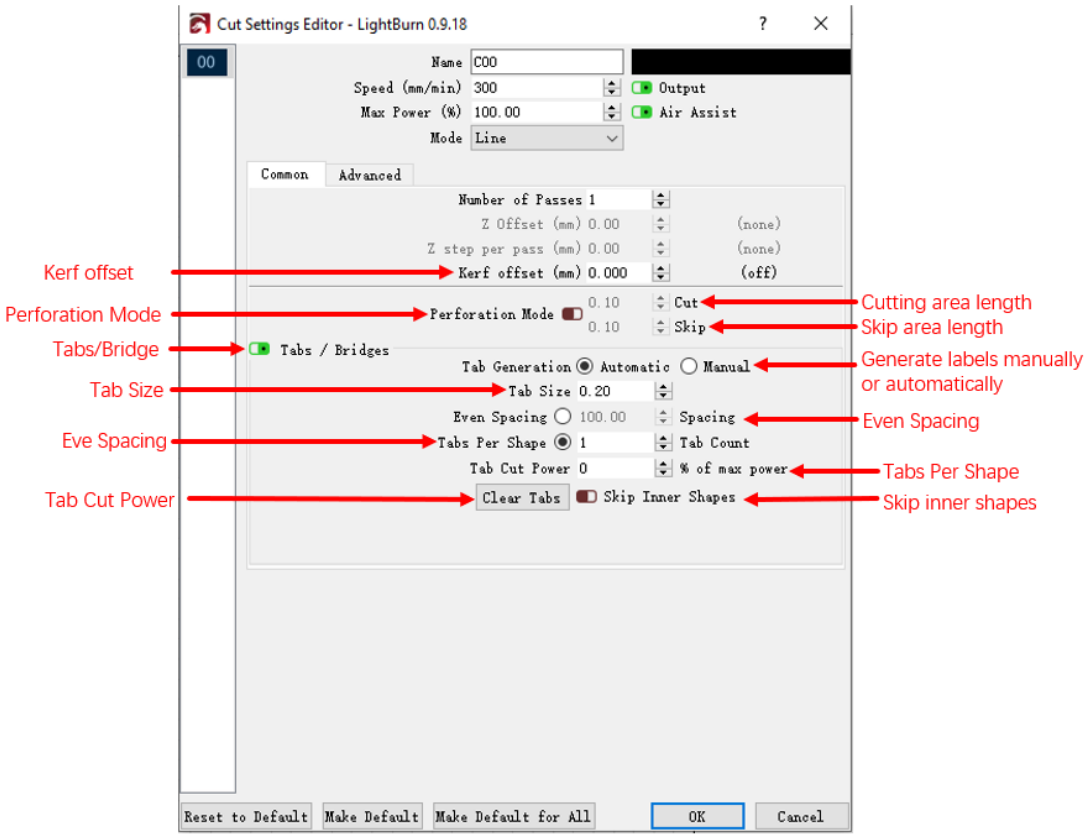


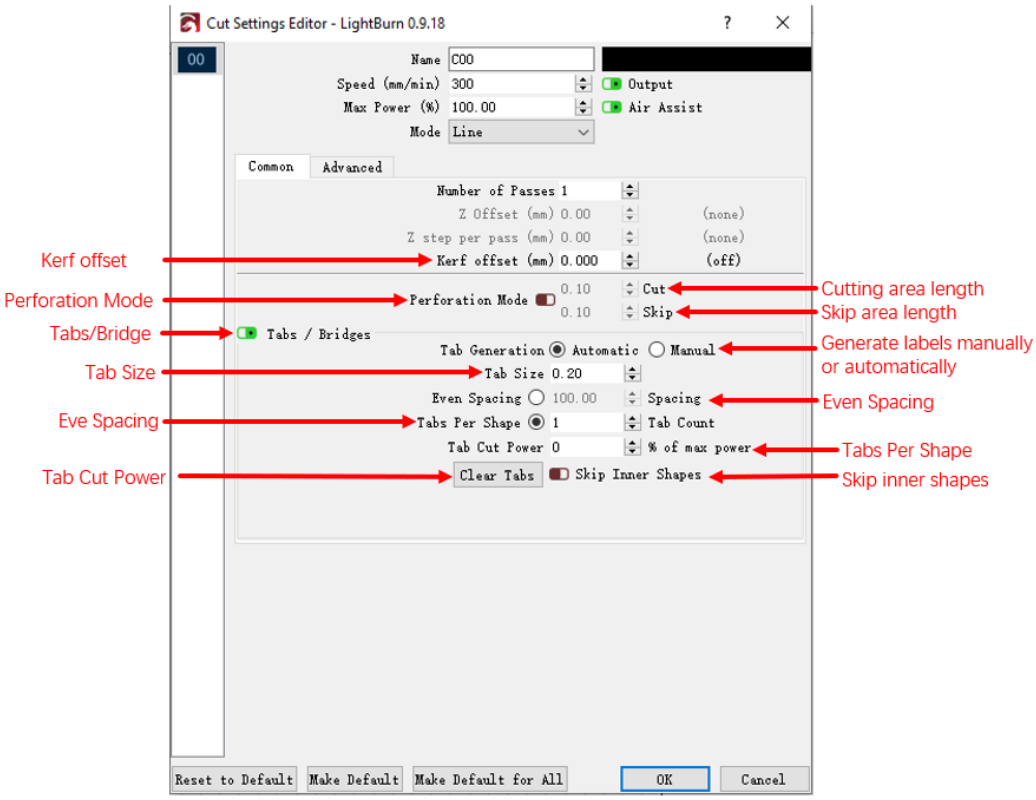

## Cuts/Layers

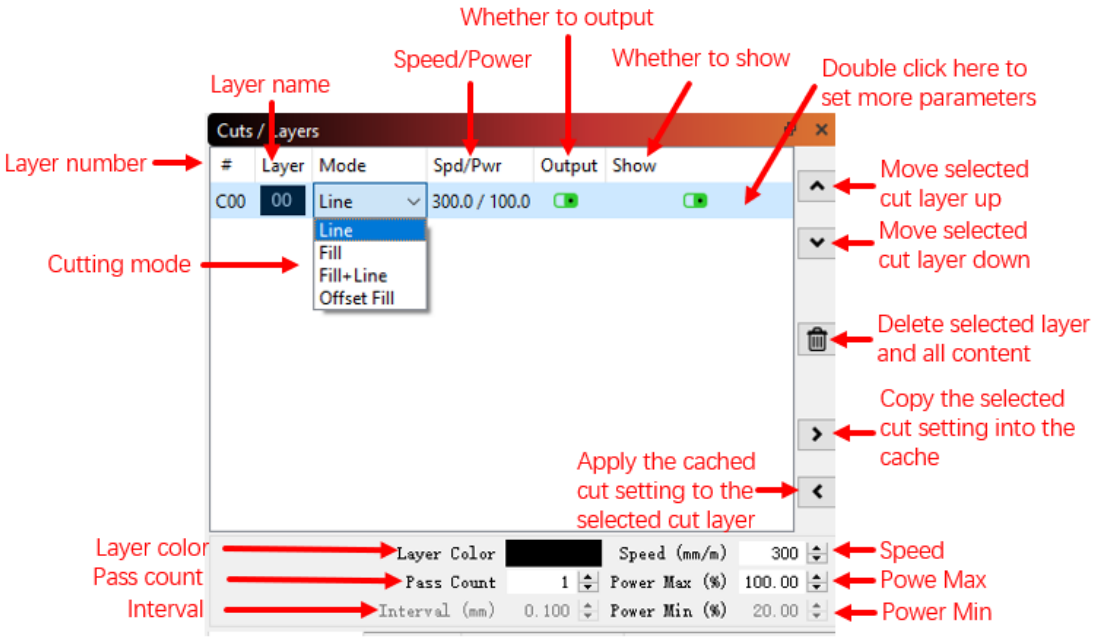


## Move

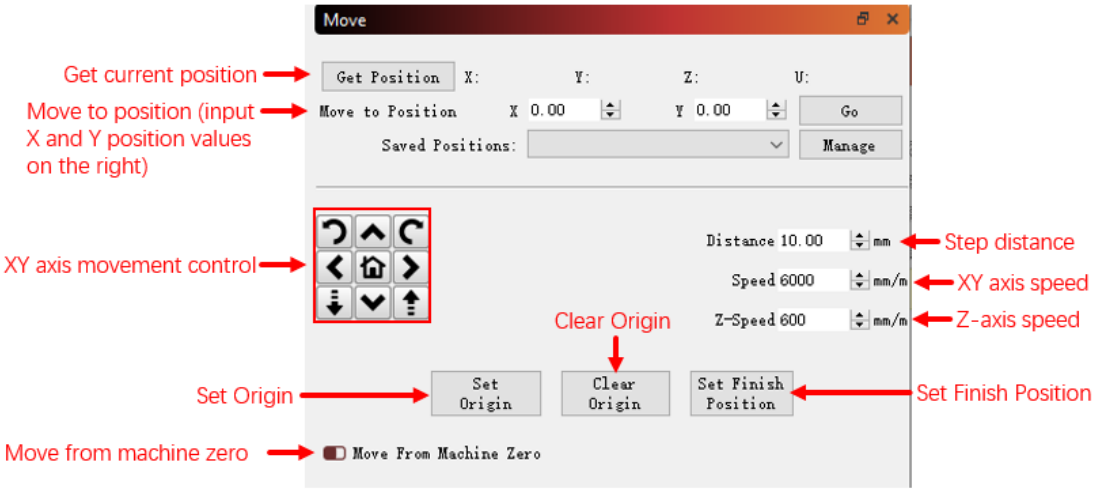

## Console and Laser

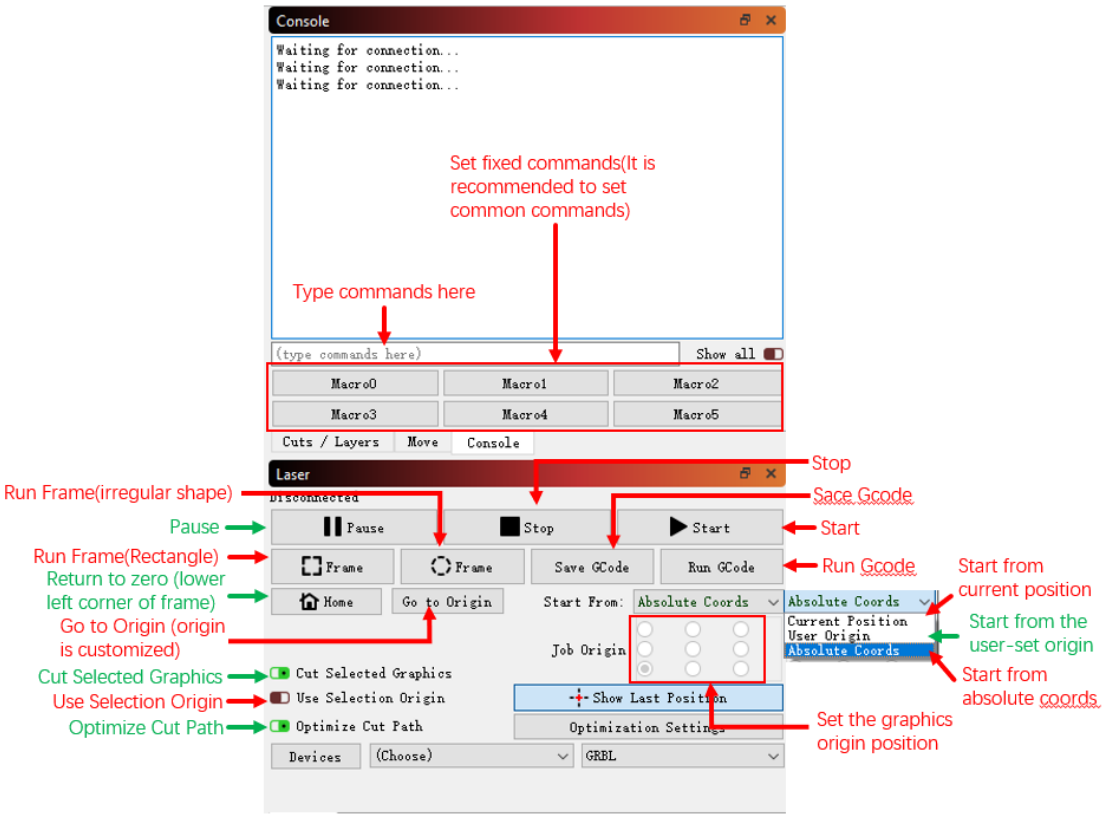


## (4) Firmware Upgrading

The Firmware of **LASER B1** is continuously updated for fixing bugs and add new features. The firmware upgrade operations are different for different systems. The detailed tutorial about firmware upgrading is contained in the firmware package.

Install the MKSLaserTool_setup V1.1.2.exe file, click MKS ESP32 Download Tool, select the right port and .bin update firmware, and click Start, it will prompt firmware successfully flashed after the update is completed.

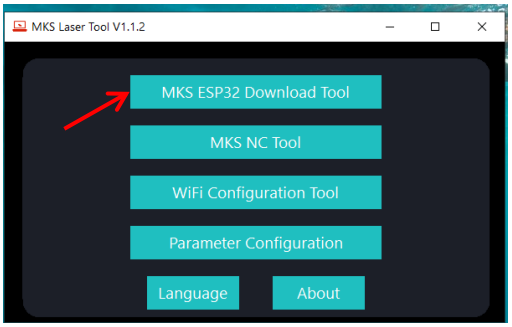


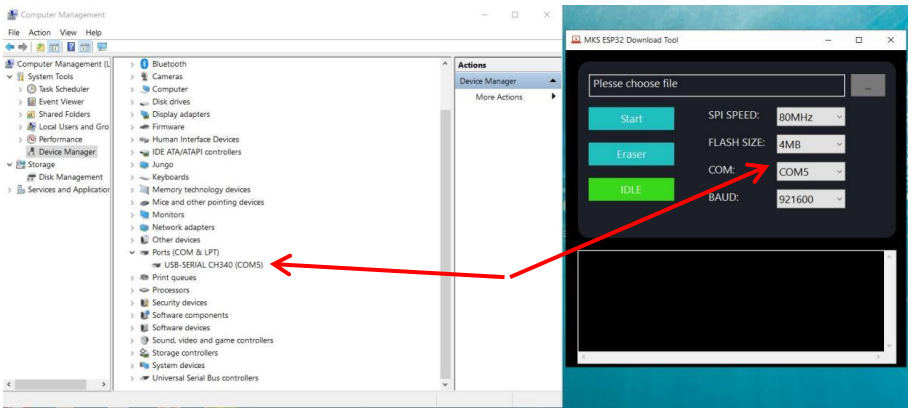


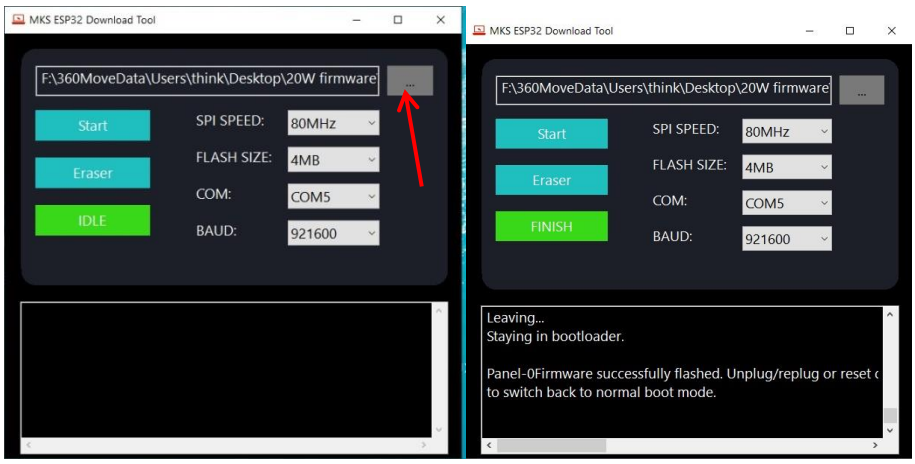


Copy the dlc_cfg.txt file from the configuration folder to the root directory of the SD card, insert the SD card into the main board of the engraver, restart the engraver, and the configuration file update will be completed automatically.

## (5) APP Operation

LASER B1 can be controlled or engraved through MKSLaser APP when the engraver and APP are connected to the same WIFI.

Open the MKSLaserTool file. Click on the WiFi configuration tool.

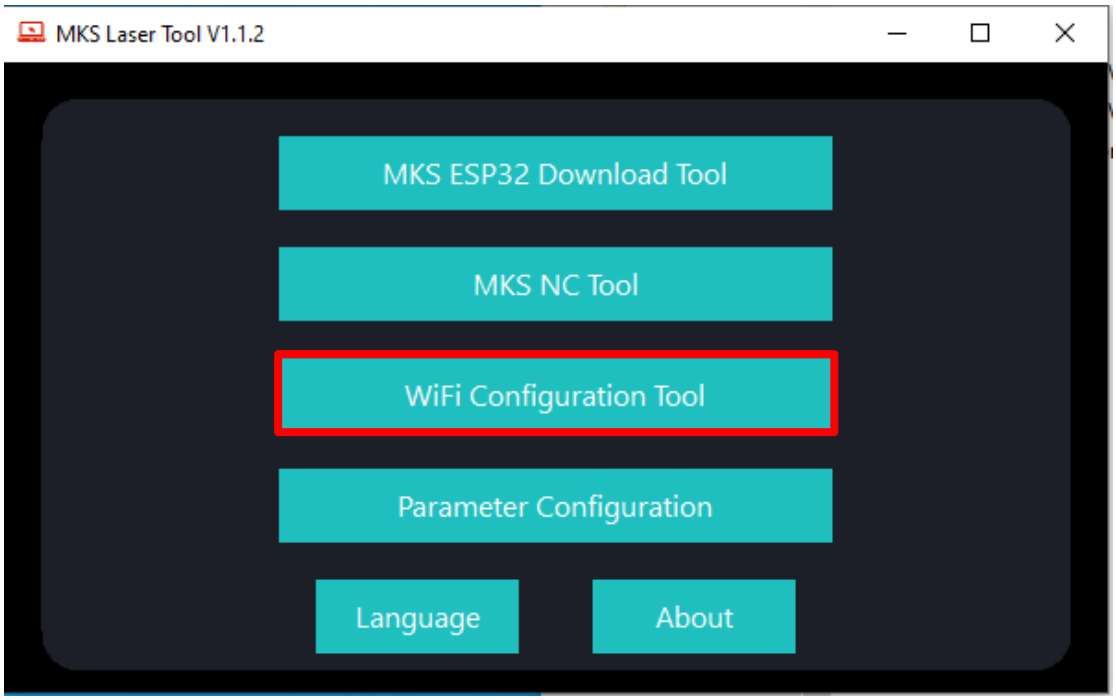


Select the correct port. Click connect.

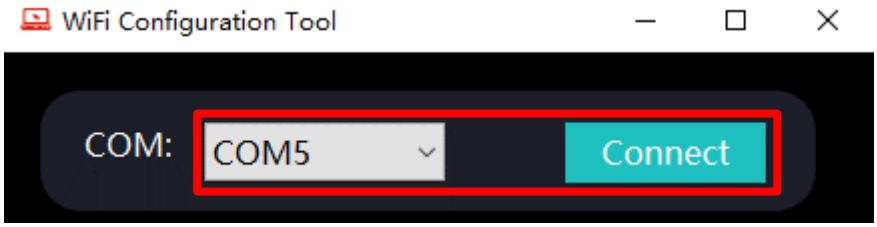

Click Connect and enter the WiFi account and password. Click Connect WiFi. Wait for the word 'ok' to appear in the log below, and click Get IP.

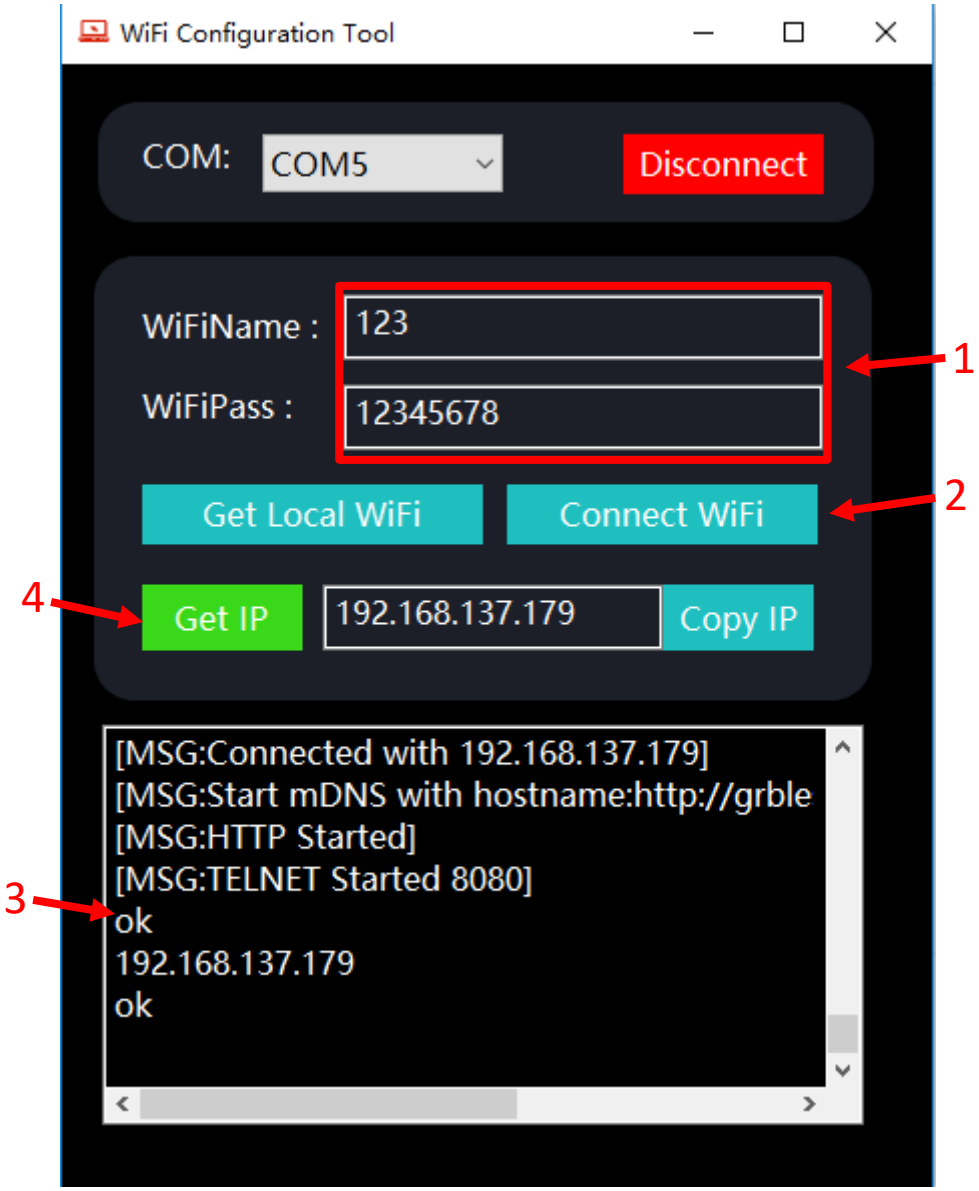


a) How to download the MKSLaser APP

Please search for "MKSLaser" in Google play or app store or visit the address below to download Android system

https://play.google.com/store/apps/details?id=makerbase.com.mks

laser

Please search for "MKSLaser" in the app store or visit the address below to download

https://apps.apple.com/us/app/mkslaser/id1542756280?uo=4&at=11l6hc&app=itunes&ct=fnd for Apple system

b) Home page about the APP

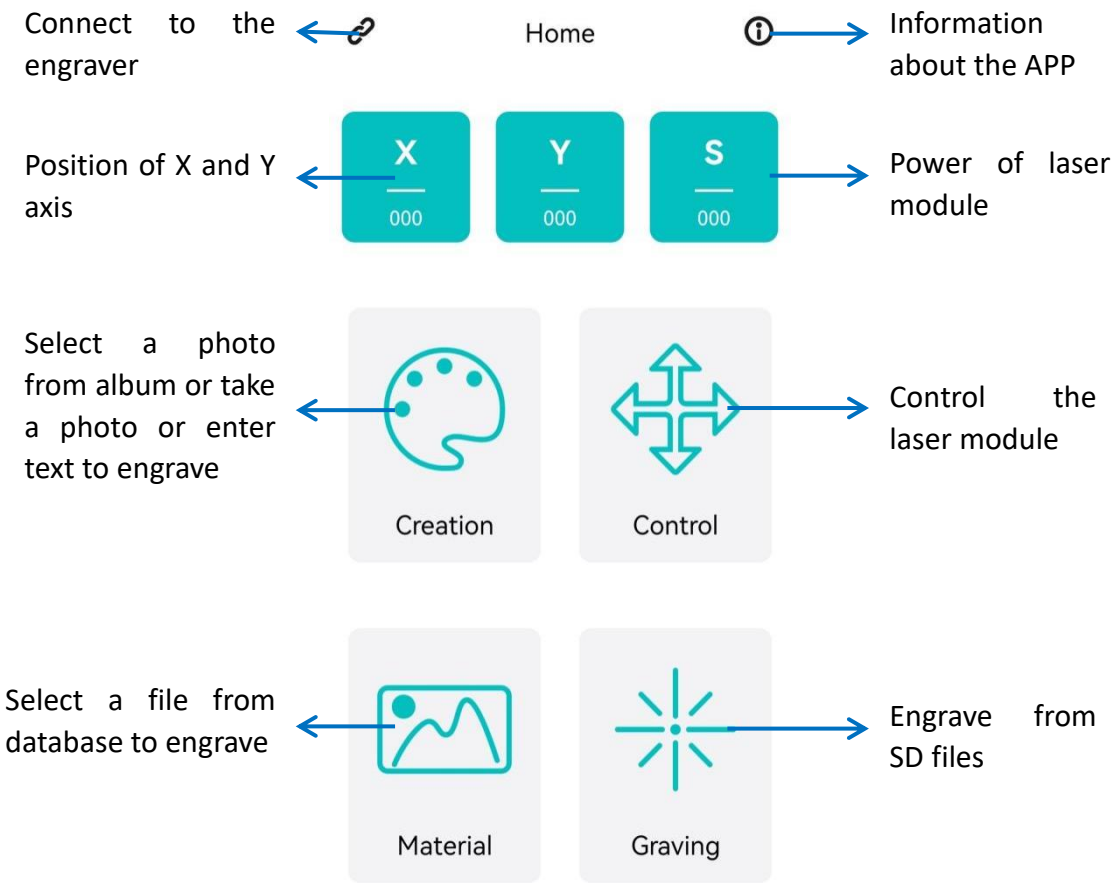


c) Connect APP to WIFI

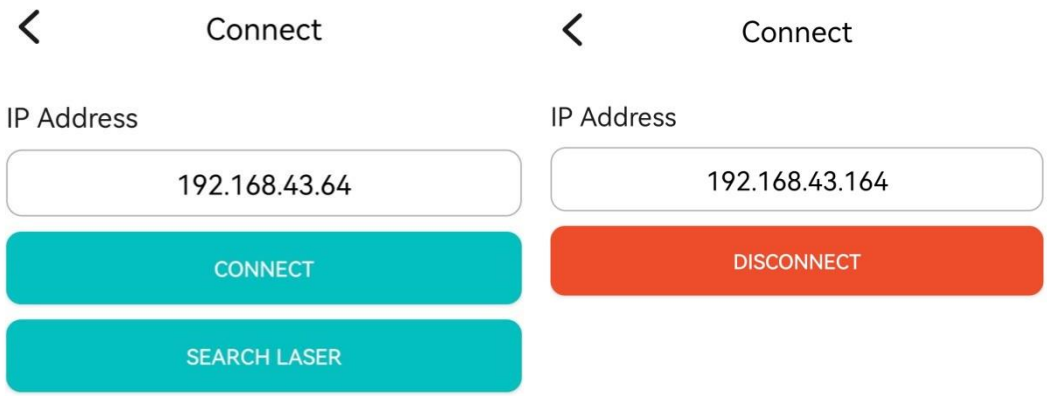


When the LASER B1 engraver is connected to wifi, we will get an IP address, click the connect button in the upper left corner of the APP, enter the IP address, and click CONNECT.

d) Enter text or take a photo to engrave

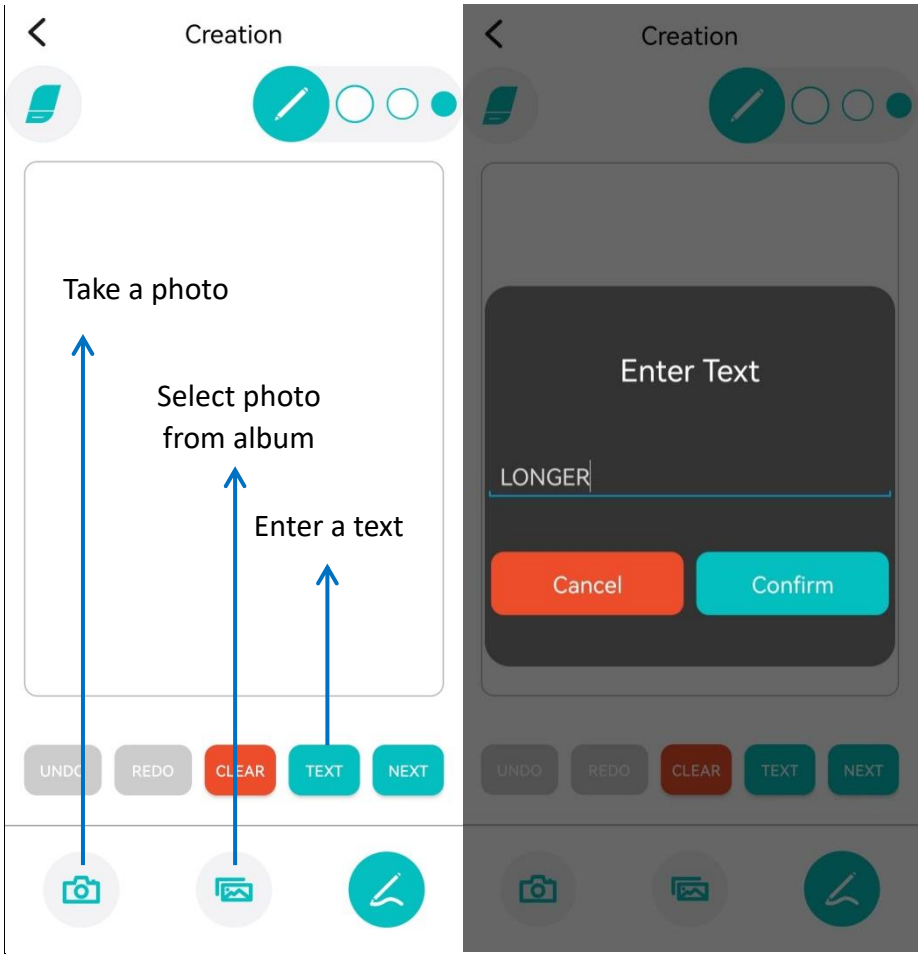

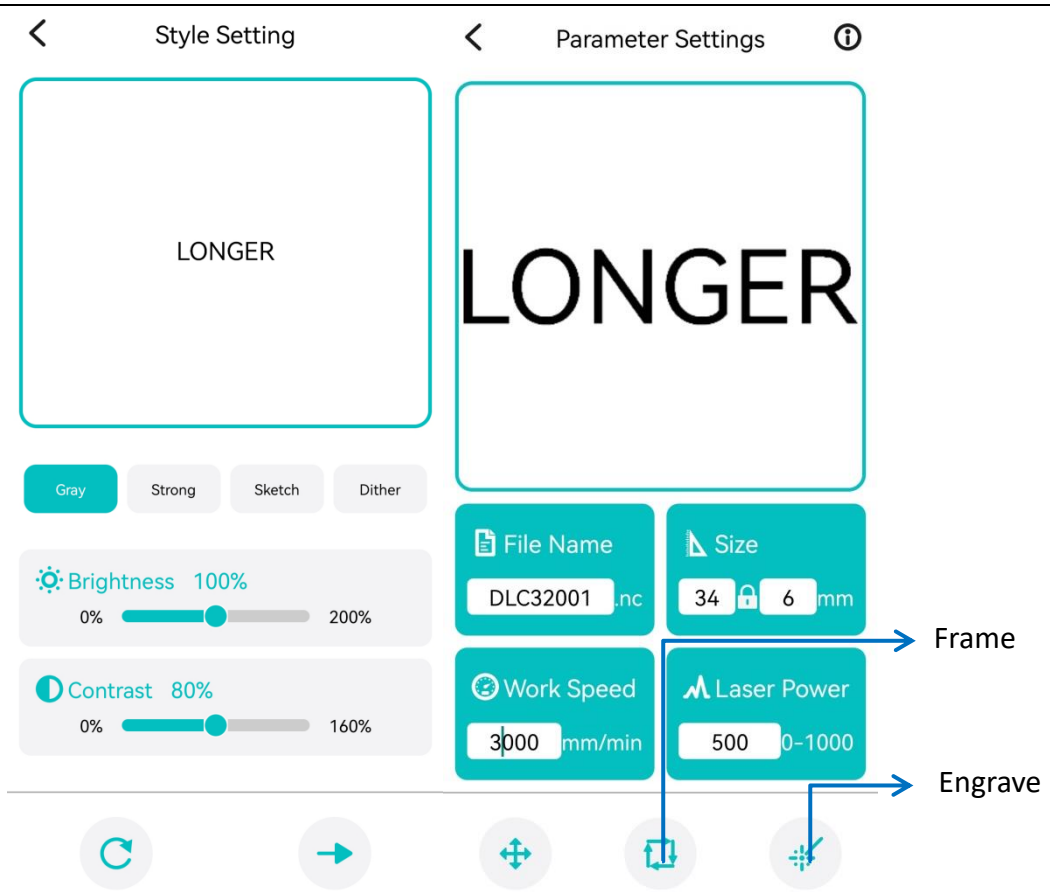


Click Creation, choose free drawing or input text, click Next, adjust the brightness and contrast, click Next, set the size, engraving speed, laser power (such as input 1000 for 100% power, and so on), click Frame to confirm the engraving range, click Engrave for working.

For picture, it can click Creation, choose camera or album to take or select a photo, click Next, adjust the brightness and contrast, click Next, set the size, engraving speed, laser power (such as input 1000 for 100% power, and so on), click Frame to confirm the engraving range, click Engrave for working. After engraving, click Confirm to enter the Graving View to check the engraving progress, adjust parameters, pause or cancel the engraving process.

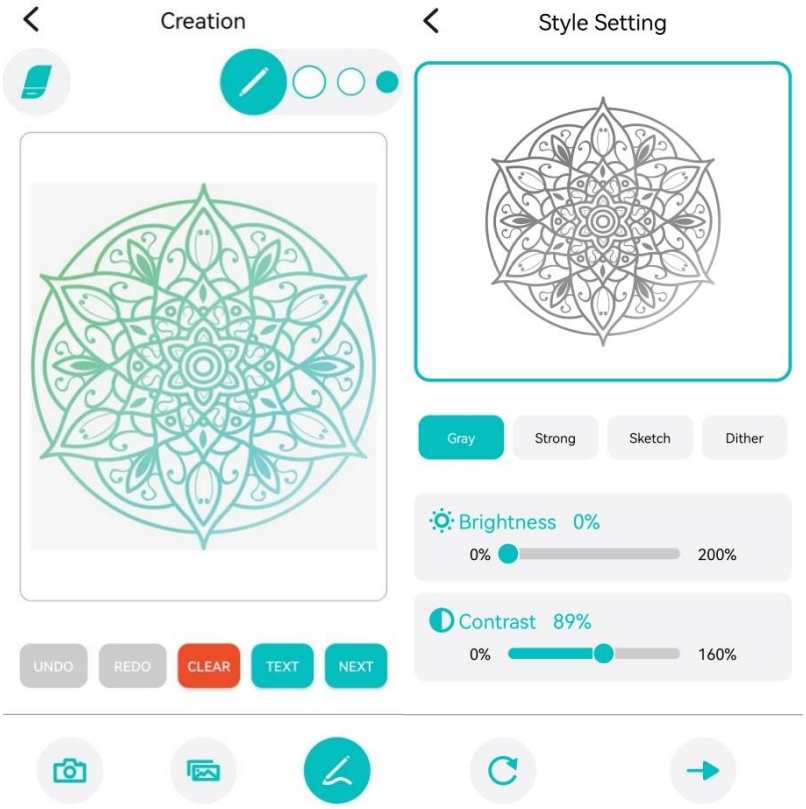


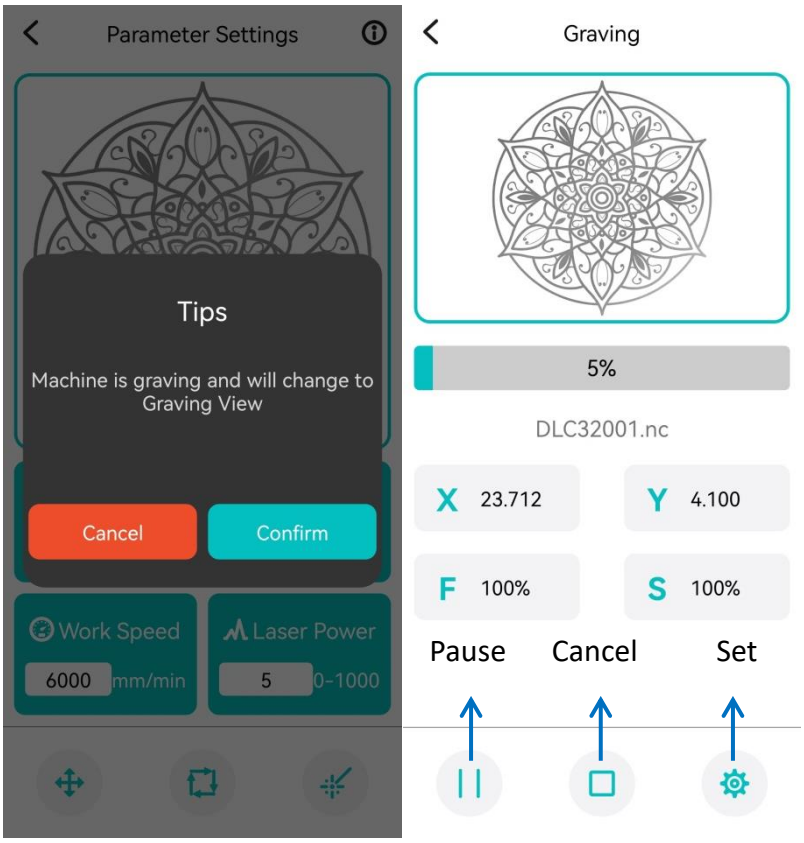


e) Control the engraver from APP

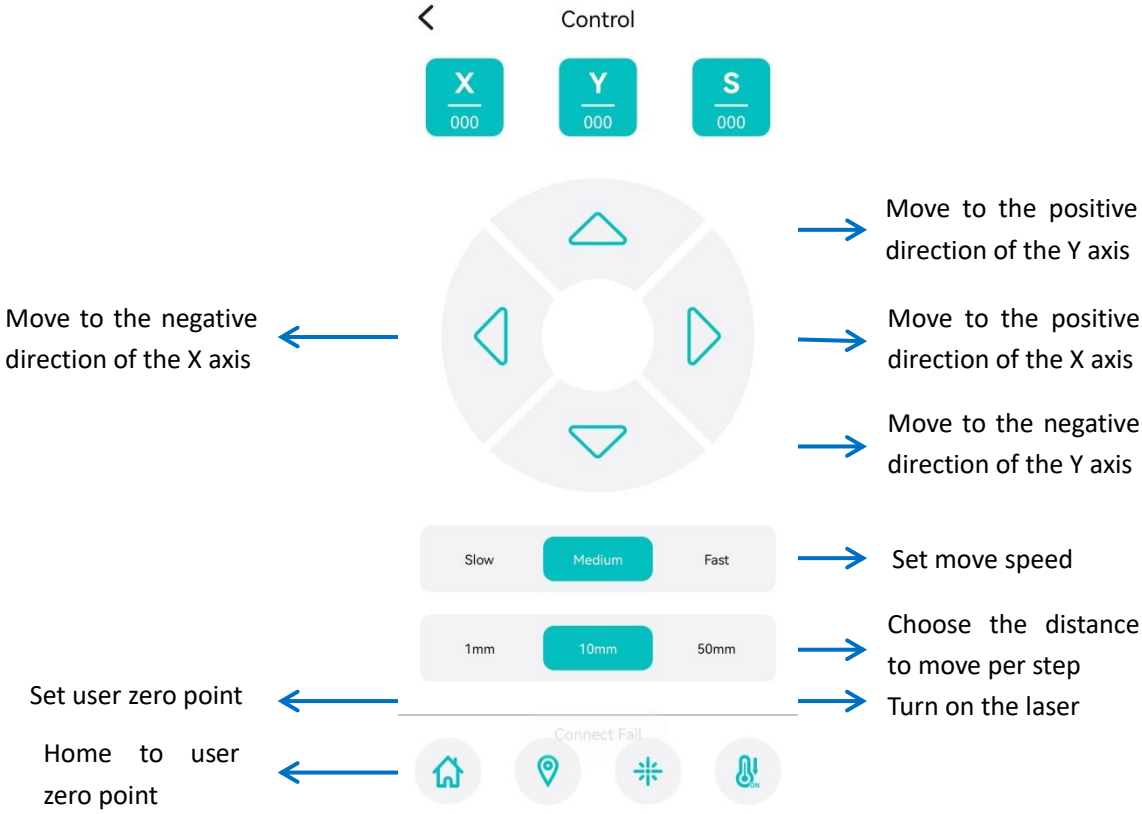


f) Engrave from SD files

Click Graving on the home UI, the APP will read the engraving file in the SD card, select the engraving file, click Frame to determine the engraving range, and click Confirm to start engraving.

In the Graving View UI, it can check the engraving progress, adjust speed and laser power, pause or cancel the engraving process.

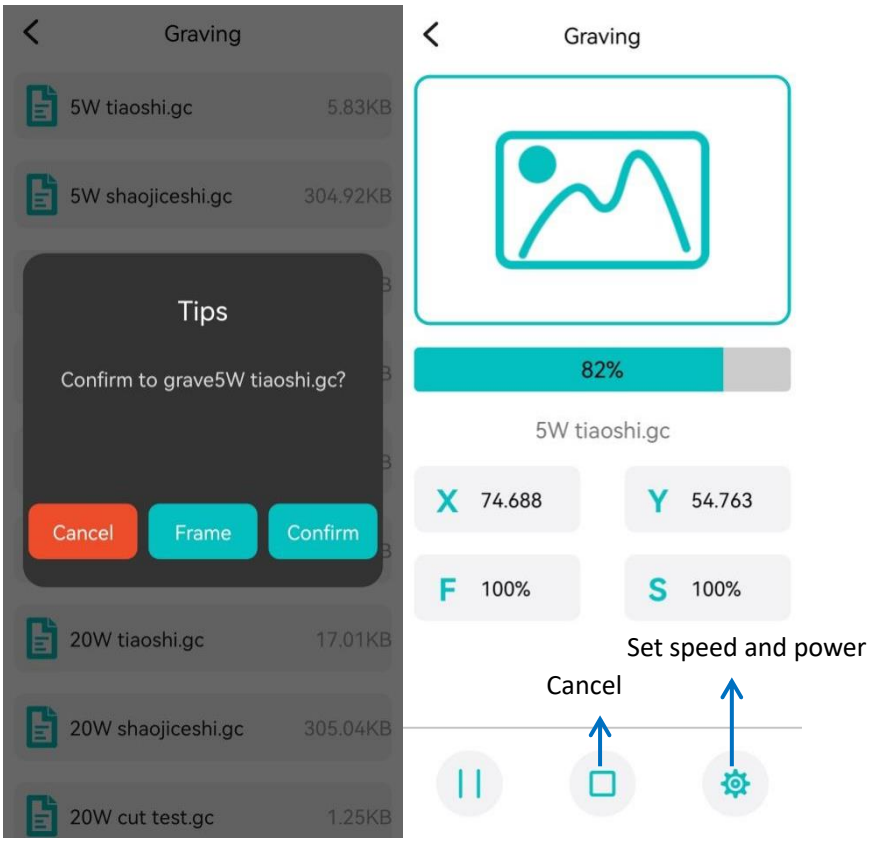
Graving
5W tiaoshi.gc 5.83KB
5W shaojiceshi.gc 304.92KB
Tips
Confirm to grave5W tiaoshi.gc?
Cancel
Frame
Confirm
20W tiaoshi.gc 17.01KB
20W shaojiceshi.gc 305.04KB
20W cut test.gc 1.25KB
Graving
82%
5W tiaoshi.gc
X 74.688
Y 54.763
F 100%
S 100%
Set speed and power
Cancel

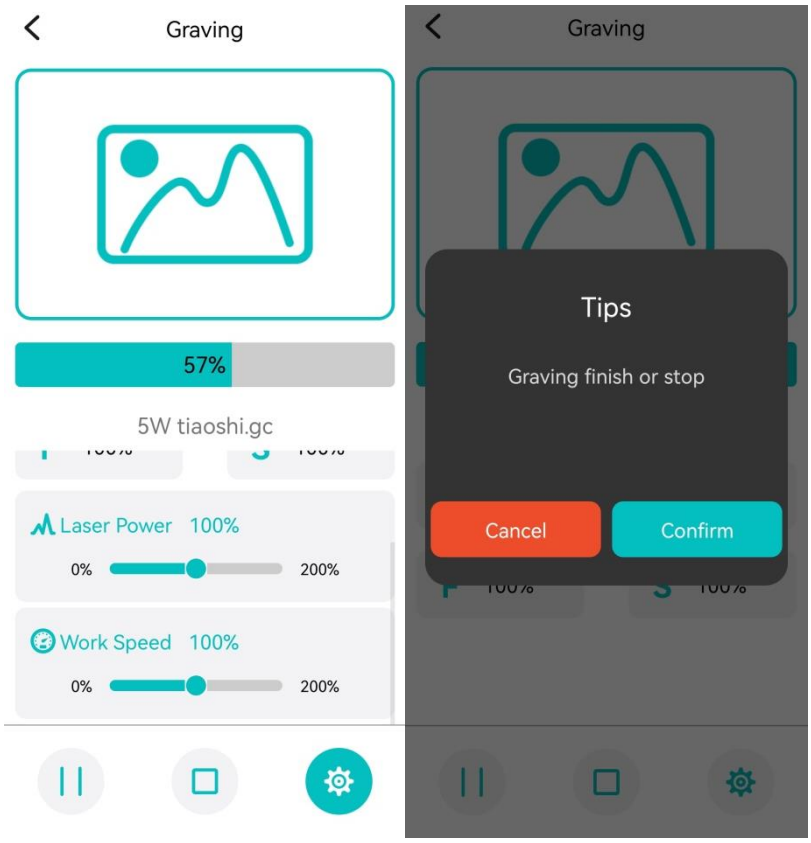
Graving
57%
5W tiaoshi.gc
Laser Power 100%
0%
200%
Work Speed 100%
0%
200%
Graving
Tips
Graving finish or stop
Cancel
Confirm

**Note: To use APP for engraving, it needs to insert the SD card into the motherboard firstly to ensure that the data can be received normally; otherwise it will prompt upload error.**

g) Control the engraving machine through the web page

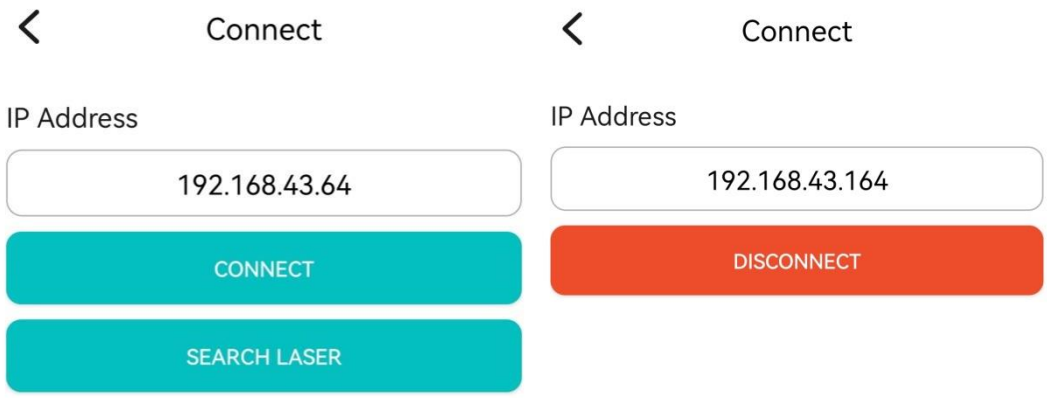


When the LASER B1 engraver is connected to wifi, we will get an IP address, click the connect button in the upper left corner of the APP, enter the IP address, and click CONNECT.

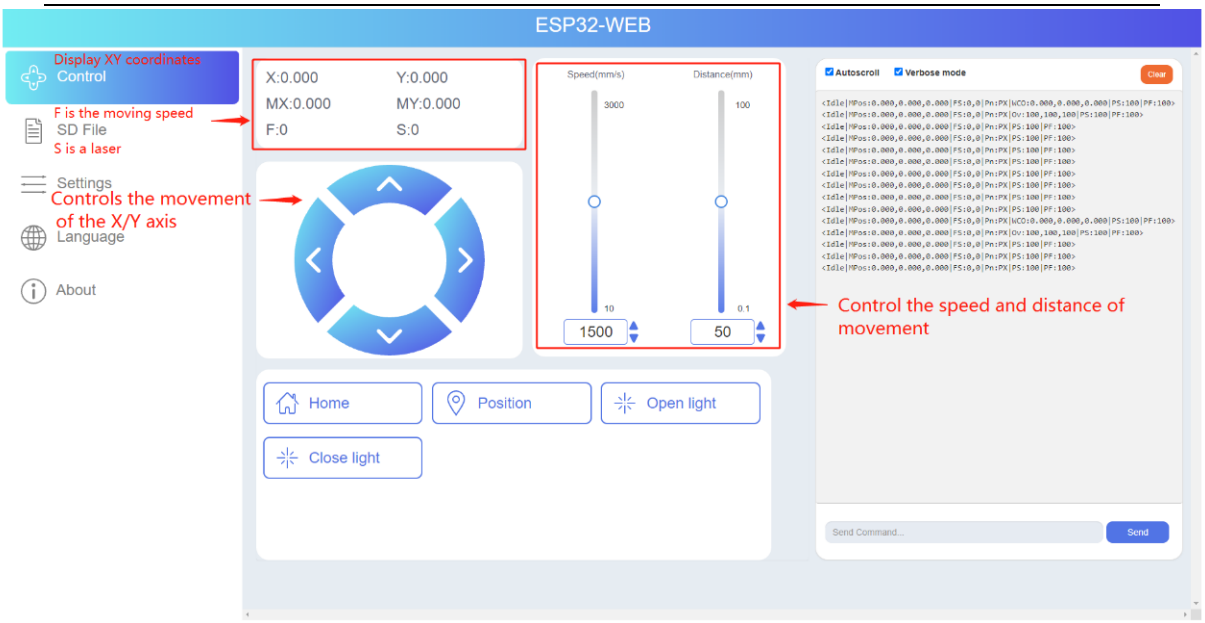


Enter the IP address in the browser of mobile phone or computer, then the control interface will pop up.

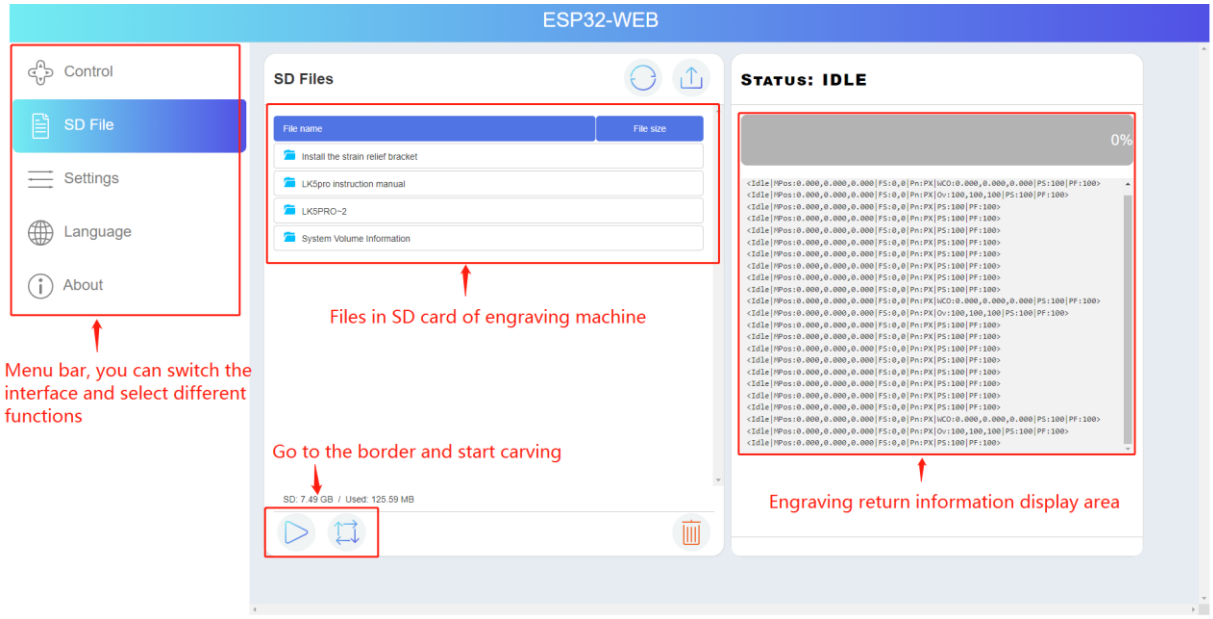


Click SD File tag, it will change to SD file page.Upload “.gcode/.nc” files generated by “LaserGRBL” or “LightBurn” software.

## (6) Air valve instructions

**Please note that when the air pump starts, please do not**

**completely close the air valve switch, otherwise it will damage the equipment.**

a) Installation and use of air valve

1. The silicone tube pointed by the first arrow connects the air pump to the air valve.
2. The silicone tube pointed by arrow No.2 connects the air assist nozzle to the air valve.

b) The air valve in the picture is closed

c) Turn the valve switch clockwise 90° to open the valve (as shown below)

## Lightburn Software sets air assist method

a) In the Cut / Layers control bar on the right, turn on the Air Assist indicated by the blue arrow (green means on, red means off, as shown below).

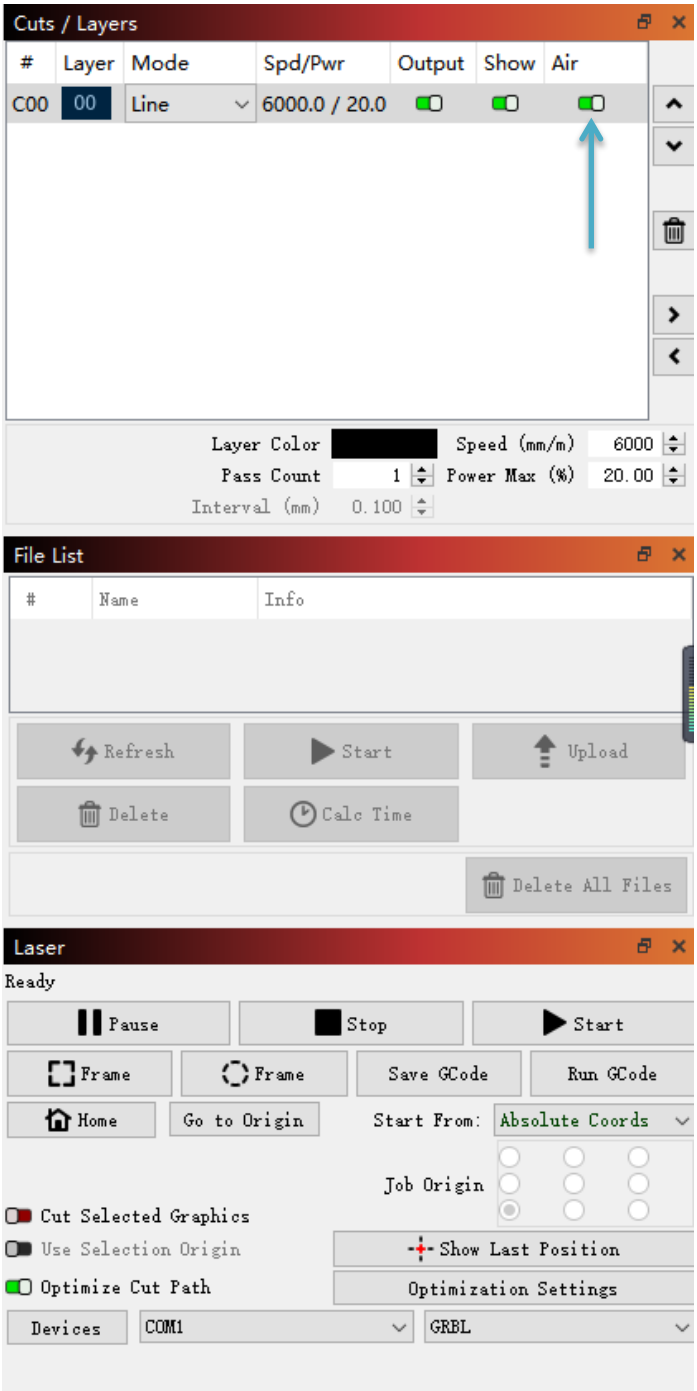

b) Click Edit to enter device Settings and select M8 (as shown in the picture below).

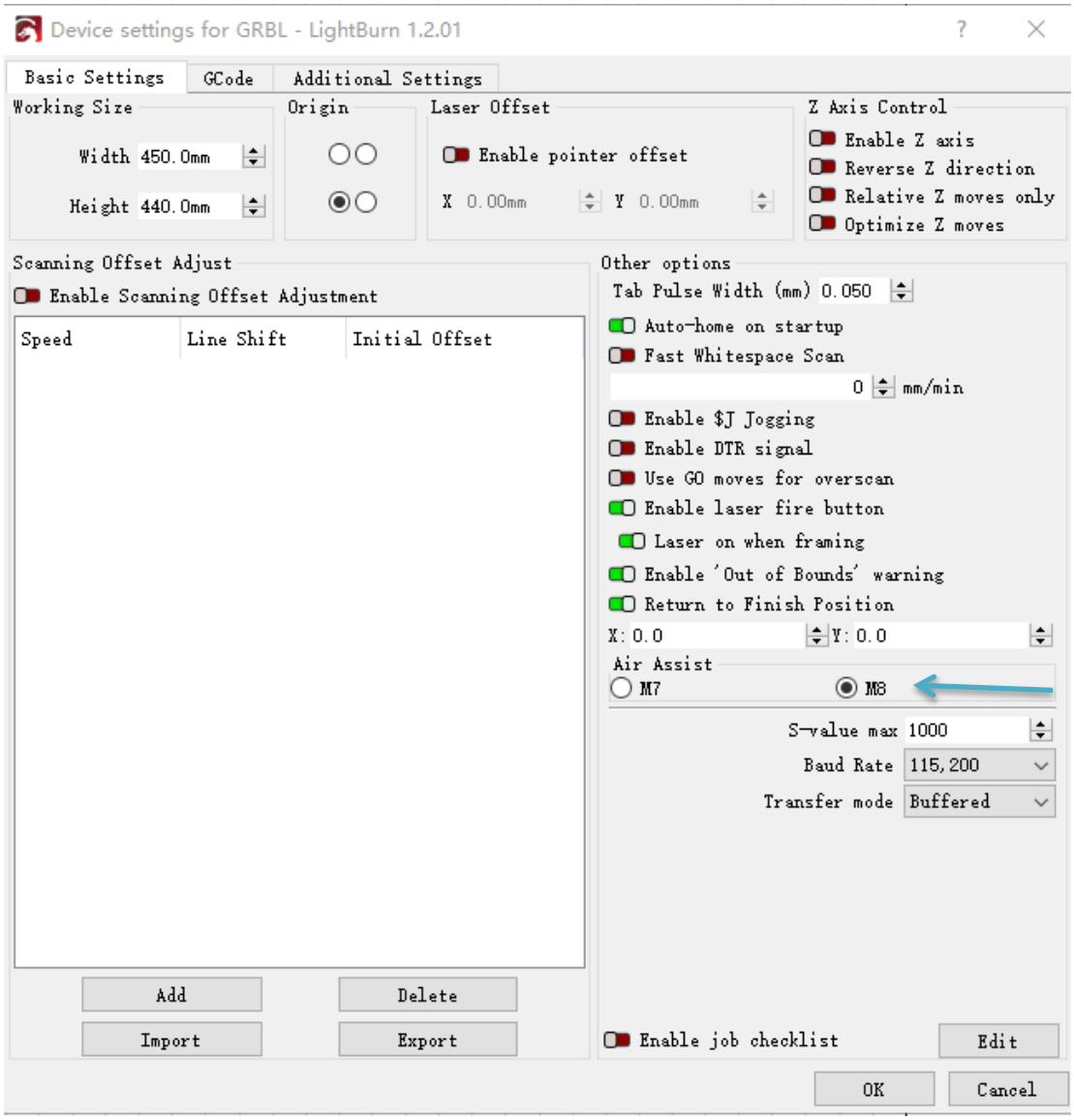

## LaserGRBL Software sets air assist method

a) Before cutting, enter "M8" in the left control column to turn on the air pump, and after cutting, enter "M9" in the left control column to turn off the air pump.

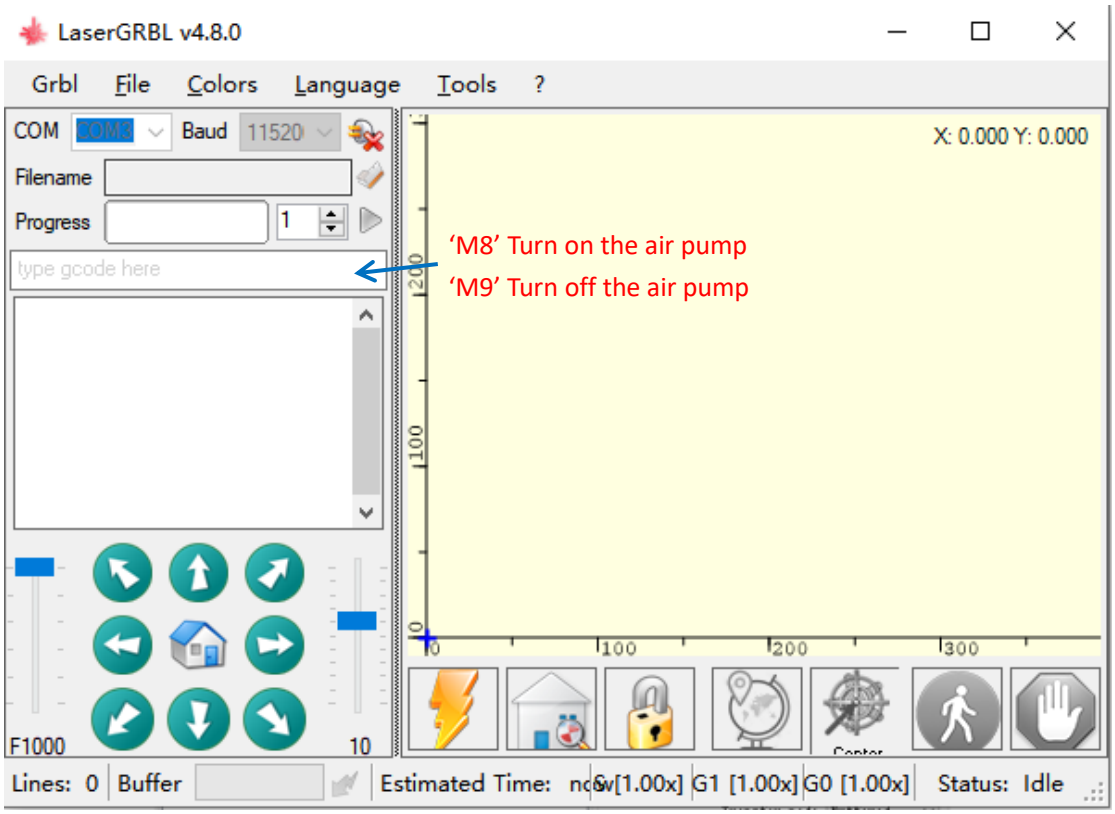

# D.FAQ

## Question 1: Are there recommended engraving and cutting parameters?

Please refer to the table “LONGER Laser Engraver Material Profiles” which describes the common materials engraving and cutting parameters for **LASER B1**.

If there is no information you need. Please wait for our updates in the future.

## Question 2: The engraved pattern appears vibration, or is not closed?

- Adjust the eccentric nut to make the parts move smoothly without shaking.
- Re-tension the timing belt.
- Adjust the synchronous wheel to prevent the synchronous belt from rubbing against the side of the synchronous wheel during movement.

## Question 3: How about the warranty policy?

For LONGER official stores and LONGER designated distributors, **LASER B1** has a One-year International Limited Manufacturer warranty from the date of purchase of **LASER B1**.

Please note the following warranty terms. One-year International Limited Manufacturer Warranty means that LONGER will provide the following free warranty services:

- Diagnostics and Evaluation.
- Technical Support.
- Replacement Parts under Warranty terms.

How to handle a warranty case:

Any warranty case must be submitted to our official support channels (Email: support@longer3d.com). In case the product was bought from a reseller, contact us first so that we can help you diagnose the problem, then turn to your reseller for spare parts if needed.

Documentation needed for a warranty case:

1. Machine purchase order number and channel, nameplate number on the machine.
2. A brief description of the problem along with the clear evidence of its presence (e.g., photos or videos).
3. On the initial contact for customer support further tests and diagnostic steps might be required to identify the cause of the problem.
4. Some parts of the **LASER B1** inevitably “get used up” over time. For these parts, specific conditions apply, unless failure has

occurred due to a defect in materials or workmanship.

| Part | Warranty Limitation |
|---|---|
| Motherboard | One-year International Limited Manufacturer Warranty |
| Motor | One-year International Limited Manufacturer Warranty |
| LONGER Laser Module | One-year International Limited Manufacturer Warranty |
| Touch Screen | One-year International Limited Manufacturer Warranty |
| Power Adapter | One-year International Limited Manufacturer Warranty |
| Air Pump | One-year International Limited Manufacturer Warranty |
| Chrome-Plated Rod | Warranty does not apply on normal wear and tear |
| 2020 Profile | Warranty does not apply on normal wear and tear |
| Coupling | Warranty does not apply on normal wear and tear |
| Eccentric Nut | Warranty does not apply on normal wear and tear |
| Bearing | Warranty does not apply on normal wear and tear |
| L-Shaped Right-Angle Foot Slot | Warranty does not apply on normal wear and tear |
| Goggles | Warranty does not apply on normal wear and tear |
| Brush | Warranty does not apply on normal wear and tear |
| Board\ Acrylic Board\ Stainless Steel Plate | Warranty does not apply on normal wear and tear |
| Linear Bearing Wheels | Warranty does not apply on normal wear and tear |
| GT2 Timing Belts | Warranty does not apply on normal wear and tear |
| Powder-Coated Aluminum Extrusion | Warranty does not apply on normal wear and tear |
| Cables & Drag Chain | Warranty does not apply on normal wear and tear |
| Cosmetic Appearance & Logos | Warranty does not apply on normal wear and tear |

Note:

- The warranty does not cover normal, expected wear and tear caused by using the **LASER B1** for its intended purpose.

- In case we have provided a free replacement part, the warranty does not reset. The original warranty period still applies.

This warranty is voided by:

- Any damages caused by improper assembly of the product.
- Any damage caused by improper use, maintenance, or operation of the engraver.
- Any damage caused by long-term lack of maintenance.
- Using the **LASER B1** in improper conditions (temperature, dustiness...).
- Upgrades, modifications, or add-ons that are not officially supported.

  Our Technical Support Team is always available to help you out under any circumstances, even if the issue is not covered under warranty.

## Question 4: How to maintain LASER B1 laser module?

LASER B1's lasers are carefully designed to resist stains, but after long-term use, there may still be dust and grease on the laser hood, air guide, and even the lens. This will affect the appearance and performance. It is recommended to clean the laser regularly to keep

it in good performance. You need to perform the following steps to clean the laser.

Preparation: hex wrench, non-woven fabric, alcohol/isopropanol solution.

Start:

1. Remove the laser hood and air guide
2. Dip a little alcohol/isopropyl alcohol solution with a non-woven fabric
3. Carefully wipe the laser lens with a non-woven fabric
4. Reinstall the laser hood and air guide

Warning: Excess solution may immerse inside the laser and cause damage to the laser.

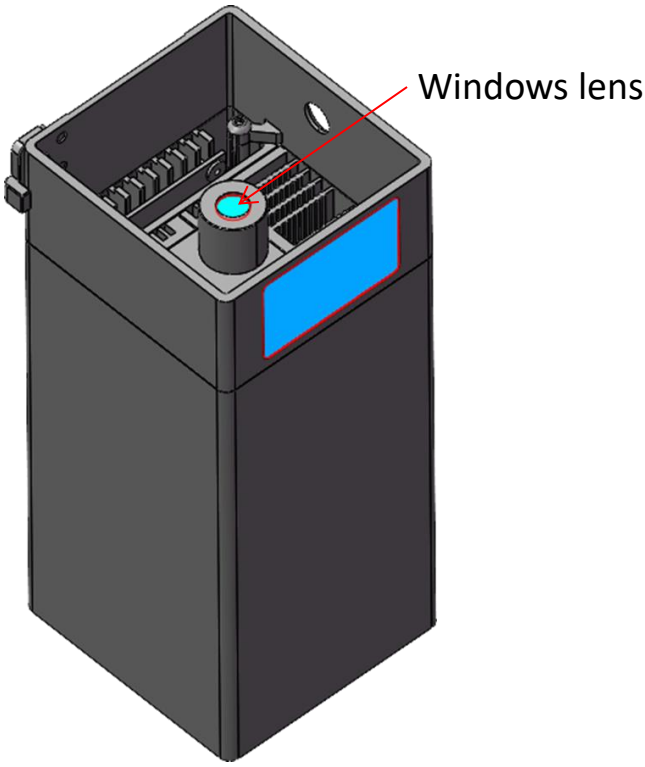


LASER B1 laser module

## Question 5: How to solve alarm 2 error or hard limit?

```
ALARM:2
G-code motion target exceeds machine travel. Machine position safely retained. Alarm
may be unlocked. (Right-click the 'Devices' button to reset the connection)
On or near line 2:
```

It adds two limit switch in LASER B1 laser engraver, the firmware has hard limit and soft limit features to locate the laser module position precisely. The position of the laser module is assumed to be the home position by default when powered on. So the engraver will trigger the alarm 2 or hard limit error if the laser head is moved in the X or Y negative direction at this time. Then it needs to home the engraver as shown in the picture below.

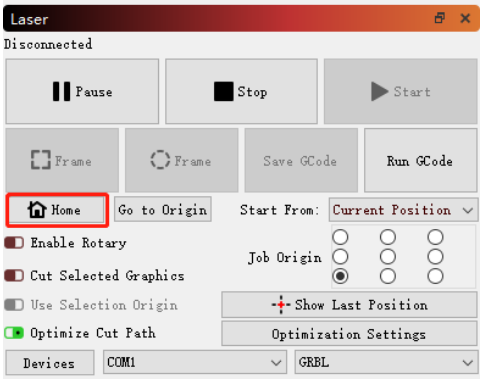


## Question 6: How to solve the upload error of the APP?

To use APP for engraving, it needs to insert the SD card into the motherboard firstly to ensure that the data can be received normally; otherwise it will prompt upload error.

Thank you for purchasing LONGER products! Under normal usage and service, the products and its parts have a warranty period up to one year. Our professional after-sale service would respond within 24 hours and help you to solve the issues.