W082057A

WORKPRO

OPERATOR'S MANUAL
60" ADJUSTABLE HEIGHT WORK TABLE WITH CRANK HANDLE

WORKPRO

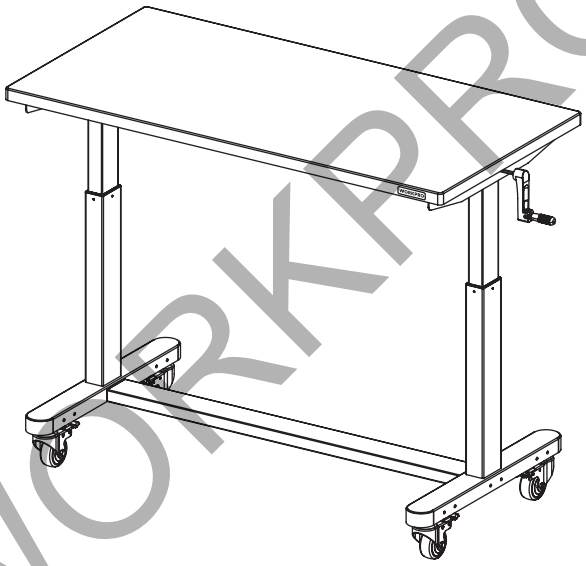

USE PRECAUTION
For your safety

INSTRUCTION MANUAL
Read and understand

EYE PROTECTION
Must be worn

PROTECTIVE GLOVES
Must be worn when assembly

CAUTION: Read and follow all Safety Rules and Operating instructions before first use of this product.
NOTE: Ensure all components are present. If any components are missing, do not proceed with assembly. Please send an email to service@greatstartools.com or call 877- 876-7562.

SAVE THIS MANUAL FOR FUTURE REFERENCE

Distributed by:
Hangzhou GreatStar Industrial Co., Ltd.
No.35 Jiuhuan Road, Jiubao Town,
Hangzhou 310019, China
www.greatstartools.com
MADE IN CHINA

TABLE OF CONTENTS

Safety Information---------- 3
Specifications ---------- 3
Package Contents ---------- 4-5
Assembly ---------- 6-14
Operation ---------- 15-16
Maintenance ---------- 16
Care and Cleaning---------- 16
Customer Service ---------- 16

FOR YOUR SAFETY: CAREFULLY READ AND UNDERSTAND ALL INSTRUCTIONS BEFORE USE.

WORKPRO

SAFETY INFORMATION

To reduce the risk of serious injury, read and follow the safety instructions below before assembling and using this product.

1. THIS PRODUCT IS INTENDED FOR INDOOR USE ONLY.

2. THIS PRODUCT IS NOT DESIGNED FOR COMMERCIAL NOR INDUSTRIAL USAGE.

⚠ CAUTION!

- Check all nuts and bolts periodically for tightness. When required, tighten them.
- DO NOT leave children unattended near this product.
- Do not lift this product directly with a forklift or tow with any mechanical devices.
- Do not exceed the maximum weight loading capacity of 500 lbs.Keep the product on level surfaces. The product could become unstable and it may tip over if stored or moved on an uneven surface, which may cause personal injury, death or product damge.

⚠ WARNING!

- DO NOT alter this product in any manner. For example, do not weld external bar locks or attach electrical equipment. This may cause product damage or personal injury.
- Any assembly or maintenance of the product must be carried out by adults only.
- Use at least two people to move or assemble this work table. Failure to do so can result in personal injury or product damage.

⚠ DANGER!

- DO NOT stand on the product and do not use it as scaffold.

SPECIFICATIONS

Maximum load of workbench	500 lbs.
The length x width of table	60" x 24"
Adjust height of workbench (included leveling feet)	26" - 35"
Adjust height of workbench (included casters)	29" - 38"

WORKPRO

PACKAGE CONTENTS

Ensure all components are present. If any components are missing, do not proceed with assembly. Please send an email to service@greatstartools.com or call 877- 876-7562.

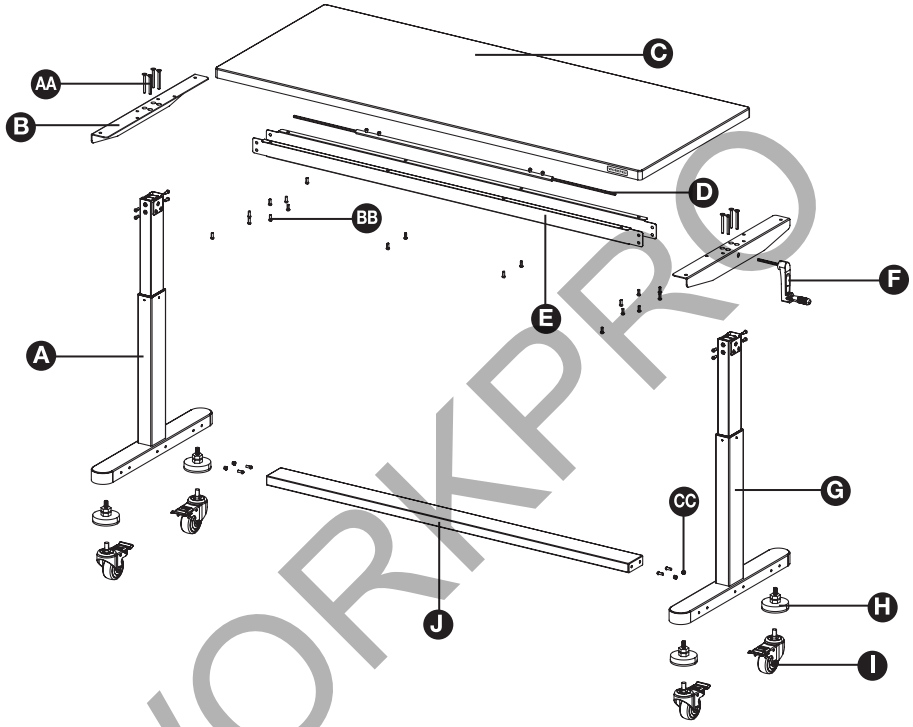

WORKPRO

TOOLS REQUIRED (INCLUDED):

10 mm &14mm Spanner

4mm Hex Key

TOOLS REQUIRED (NOT INCLUDED):

19mm Combination Spanner

PACKAGE CONTENTS

#	PIC	DESCRIPTION	QTY
A		Left leg	1
B		Connecting plate	2
C		Wood top	1
D		Rotating rod	1
E		Top rail	1
F		Crank handle	1
G		Right leg	1
H		Leveling foot	4
I		Swivel caster with brake	4
J		Support rail	1
AA		M6 x 60mm Hexagon countersunk head bolt	8
BB		M6 x 15mm Hexagon socket head bolt	32
CC		M6 Locking nut	4

WORKPRO

ASSEMBLY

NOTE:

- Assemble on a flat surface. A piece of cardboard is recommended to keep the product from being scratched during assembly.
- Determine the front and back of the wood top (C) before starting. The front of the wood top (C) has the WORKPRO badge on the edge.
- Begin product assembly close to the final intended location of your workbench. This product is heavy and may be difficult to move after assembly.
- Two people are recommended for assembly.

STEP 1 : ADJUST THE HEIGHT OF LEGS

- Unfold the handle of the crank handle (F).
- Insert the crank handle (F) into the hole marked with symbol "B" on the top of one leg (A/G).
- Turn the crank handle (F) clockwise to adjust the leg (A/G) to the maximum height. To avoid damage, do not keep turning the crank handle (F) once the symbol line below "MAX" appears on the leg (A/G) (Fig. 1).
- Remove the crank handle (F) after adjusting the height of leg(A/G).
- Repeat the process for the other leg (A/G). Make sure the legs(A/G) are at the same height.

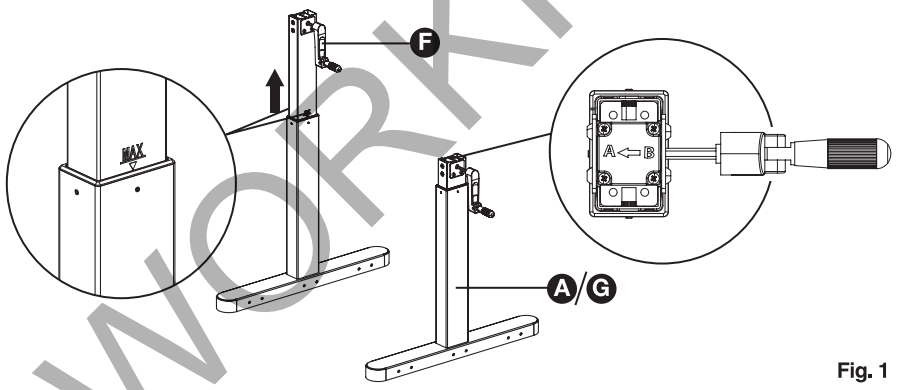

Fig. 1

PART	A/G	F
DESCRIPTION	Leg	Crank handle
QTY	2	1

WORKPRO

ASSEMBLY

STEP 2: ATTACH THE CONNECTING PLATES

- Attach the connecting plate (B) to the top of one leg (G) marked with symbol "B", using four M6 x 60mm hexagon countersunk head bolts (AA) and tighten to desired tightness with supplied 4mm hex key. Make sure the mounting surface of connecting plate (B) is parallel to the bottom of the leg (G). Mark this leg is the right one (G).
- Attach the connecting plate (B) to the top of other leg (A) marked with symbol "A", using four M6 x 60mm hexagon countersunk head bolts (AA) and tighten to desired tightness with supplied 4mm hex key. Make sure the mounting surface of connecting plate (B) is parallel to the bottom of the leg (A). Mark this leg is the left one (A).

⚠ CAUTION!
To adjust the height properly, the two connecting plates (B) CAN NOT be attached to tops of legs (A/G) marked with the same symbol(A/B).

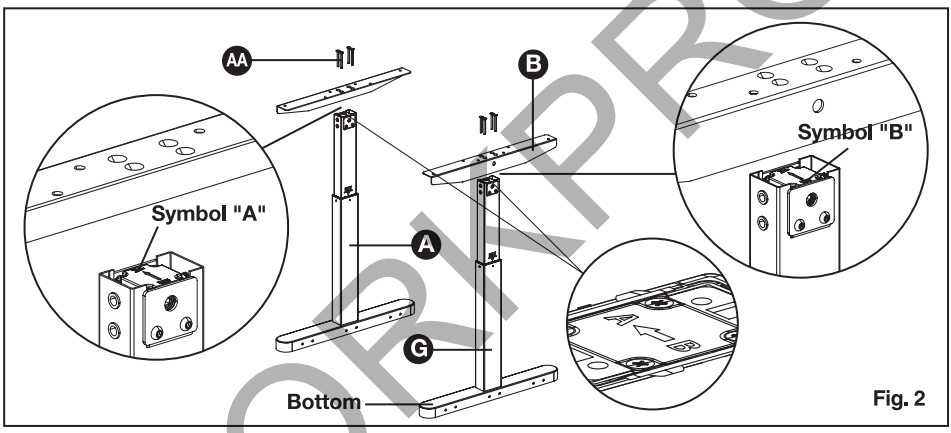

Fig. 2

PART	A	B	G	AA
DESCRIPTION	Left leg	Connecting plate	Right leg	M6 x 60mm Hexagon countersunk head bolt
QTY	1	2	1	8

WORKPRO

ASSEMBLY

STEP 3: ATTACH THE LEGS TO THE WOOD TOP

- Attach the right leg (G) with connecting plates (B) to the right side of the wood top (C) with six M6 x 15mm Hexagon socket head bolts (BB), and tighten the bolts to desired tightness with the supplied 4mm hex key.
- Attach the left leg (A) with connecting plates (B) to the left side of the wood top (C) with six M6 x 15mm Hexagon socket head bolts (BB), and tighten the bolts to desired tightness with the supplied 4mm hex key.

NOTE:
Do not overtighten the bolts into the wood top to avoid damaging the wood top.

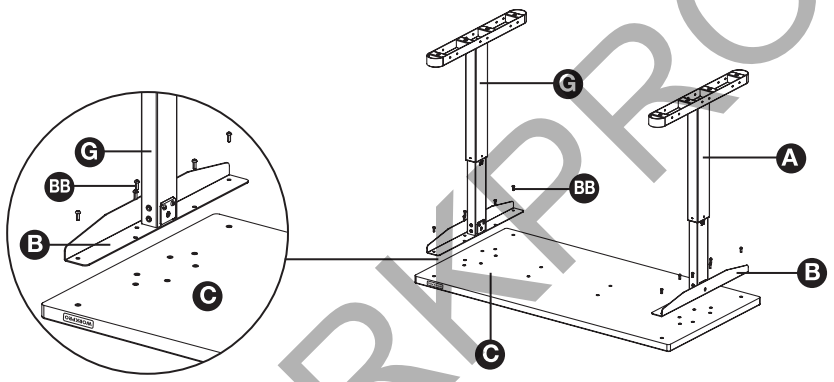

Fig. 3

PART	A	B	C	G	BB
DESCRIPTION	Left leg	Connecting plate	Wood top	Right leg	M6 x 15mm Hexagon socket head bolts
QTY	1	2	1	1	12

WORKPRO

STEP 4: ATTACH THE ROTATING ROD

- Loosen four M6 x10mm hexagon socket head bolts on the rotating rod (D) with the supplied 4mm hex key.
- Insert one end of the rotating rod (D) into the hole of right leg (G), and insert the other end of the rotating rod (D) into the hole of left leg (A). Make sure the aluminum alloy connecting rod is in the middle of the rotating rod (D).
- Tighten four M6 x12mm hexagon socket head bolts to desired tightness with the supplied 4mm hex key.

NOTE:
- Do not turn the rotating rod (D) yet to ensure that the leg remains at its highest level.

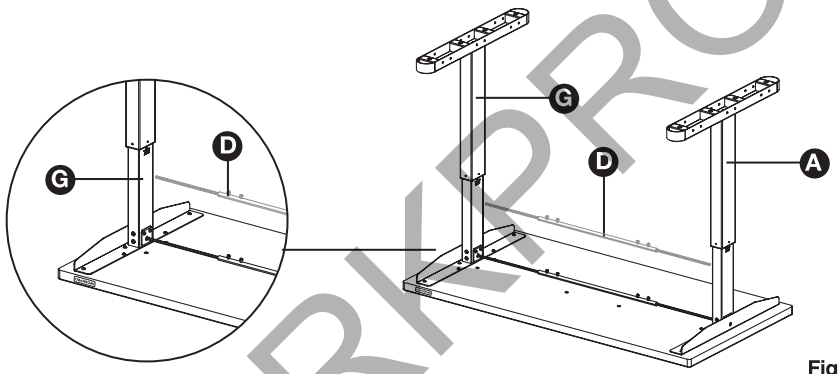

Fig. 4

PART	A	D	G
DESCRIPTION	Left leg	Rotating Rod	Right leg
QTY	1	1	1

WORKPRO

STEP 5: ATTACH THE TOP RAIL

- Attach the top rail (E) to the wood top (C), left leg(A) and right leg(G) using sixteen M6 x 15mm hexagon socket head bolts (BB), and tighten the bolts to desired tightness with the supplied 4mm hex key.

NOTE:
Do not overtighten the bolts.

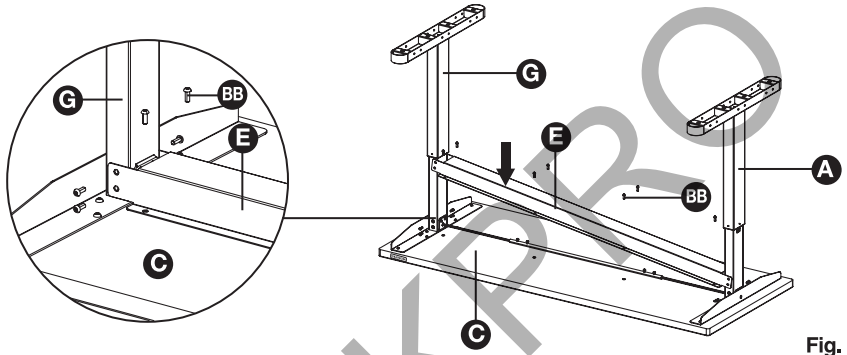

Fig. 5

PART	A	C	E	G	BB
DESCRIPTION	Left leg	Wood top	Top rail	Right leg	M6 x 15mm Hexagon socket head bolts
QTY	1	1	1	1	16

WORKPRO

STEP 6: ATTACH THE SUPPORT RAIL

The support rail (J) can be attached in the middle, rear or front position of the legs (A/G). Attach it at your desired position as you need.

Option 1:

Attach the support rail (J) in the middle positon of the legs (A/G) using four M6 x 15mm hexagon socket head screws(BB) and four M6 locking nuts(CC), and tighten the nuts to desired tightness with the supplied 4mm hex key and 10mm spanner.

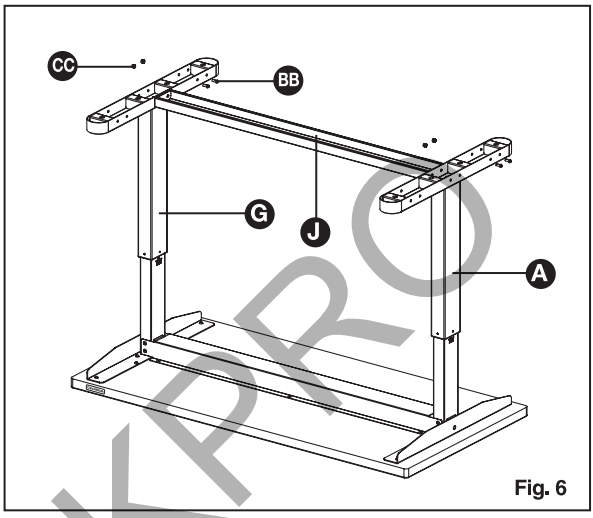

Fig. 6

Option 2:

Attach the support rail (J) in the rear positon of the legs (A/G) using four M6 x 15mm hexagon socket head screws(BB) and four M6 locking nuts(CC), and tighten the nuts to desired tightness with the supplied 4mm hex key and 10mm spanner.

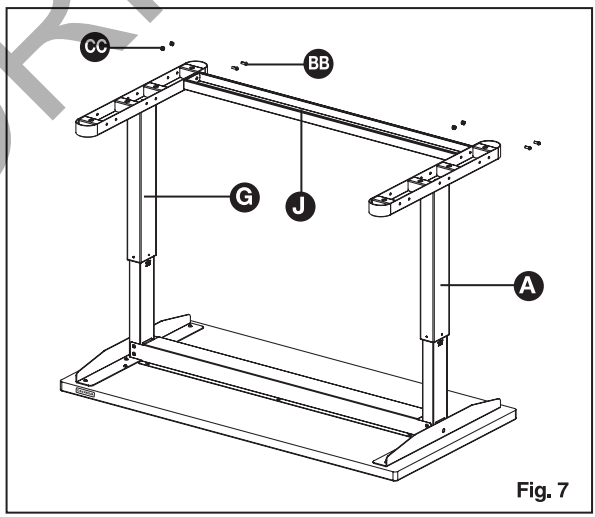

Fig. 7

WORKPRO

Option 3:

Attach the support rail (J) in the front positon of the legs (A) using four M6 x 15mm hexagon socket head screws(BB) and four M6 locking nuts(CC), and tighten the nuts to desired tightness with the supplied 4mm hex key and 10mm spanner.

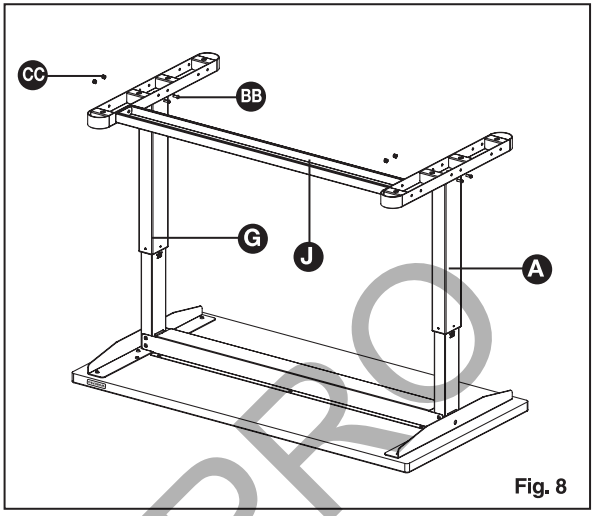

Fig. 8

NOTE:
Do not overtighten the bolts.

PART	A	G	J	BB	CC
DESCRIPTION	Left leg	Right leg	Support rail	M6 x 15mm Hexagon socket head bolts	M6 locking nut
QTY	1	1	1	4	4

WORKPRO

SETP 7: ATTACH THE SWIVEL CASTERS WITH BRAKE OR LEVELING FEET

The workbench can be assembled with either the four swivel casters with brake for mobility or attach the four leveling feet for use as a stationary table or desk.

Option 1:

Screw the four swivel casters with brake (I) into the legs(A/G) and tighten to desired tightness.

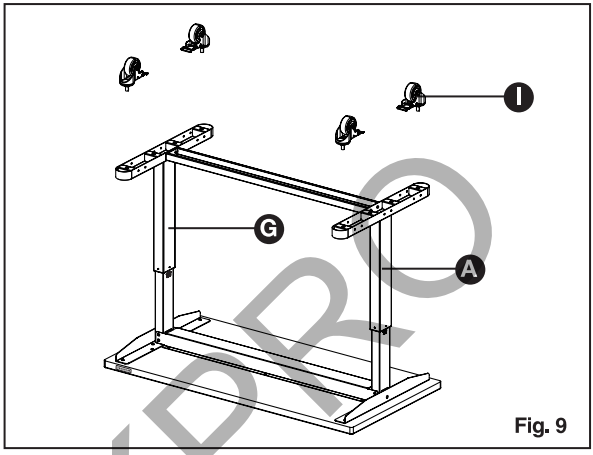

Fig. 9

PART	A	G	I
DESCRIPTION	Left leg	Right leg	Swivel casters with brake
QTY	1	1	4

Option 2:

Screw the four leveling feet (H) into the legs(A/G) and tighten to desired tightness.

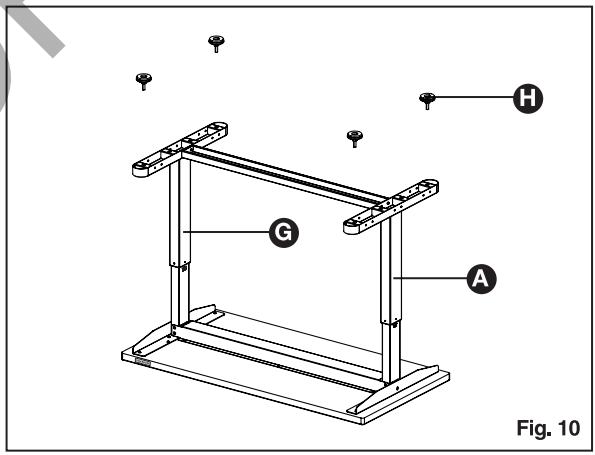

Fig. 10

PART	A	G	H
DESCRIPTION	Left leg	Right leg	leveling foot
QTY	1	1	4

WORKPRO

STEP 8:

Using two or more people, stand the workbench in its upright.

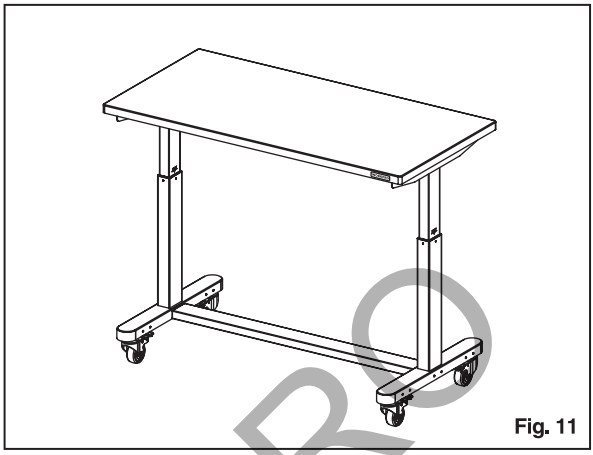

Fig. 11

STEP 9:

Insert the crank handle (F) into the hole on one side of the workbench.

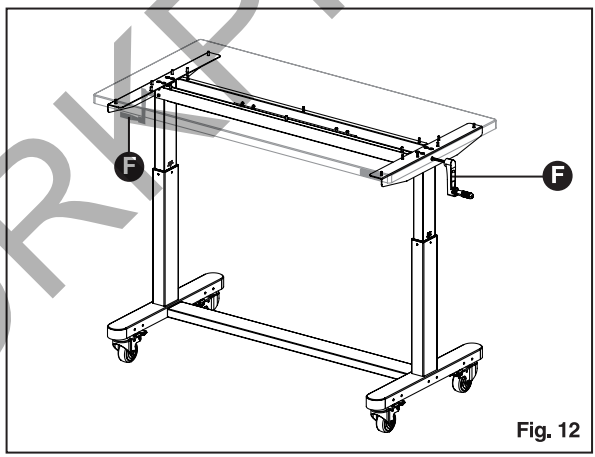

Fig. 12

WORKPRO

OPERATION

1. LEVELING FOOT ADJUSTMENT

- Adjust each leveling foot (H) to the desired elevation with a 19mm combination spanner.
- Turn the leveling foot counterclockwise to elevate and clockwise to lower the leveling foot.
- Locking the leveling feet with the corresponding M12 nuts by the 19mm combination spanner(not included).

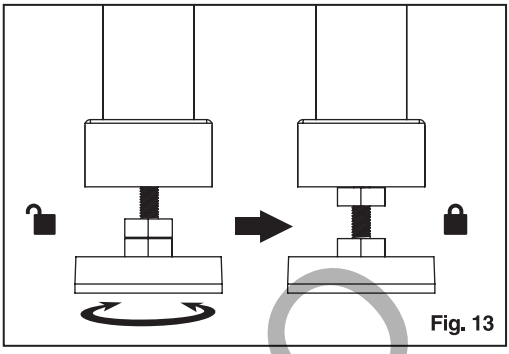

Fig. 13

2. HEIGHT ADJUSTMENT

The height of workbench can be adjusted on both sides but in the opposite way.

Option 1:

- Insert the crank handle (F) into the hole on the right of the workbench (next to the WORKPRO badge).
- To raise the workbench, turn the crank handle (F) clockwise to the desired height.
- To lower the workbench, turn the crank handle (F) counterclockwise until it reaches the desired height.
- To avoid damage, do not keep turning the crank handle once it has rested at its highest or lowest position. The highest position is marked with the symbol line "MAX".

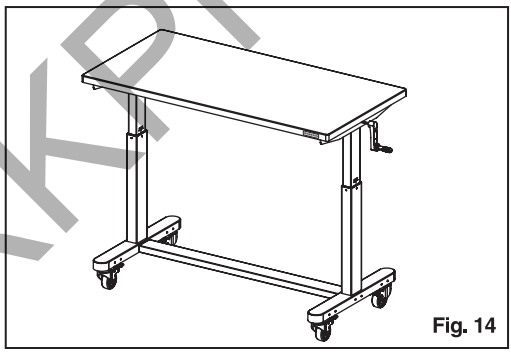

Fig. 14

Option 2:

- Insert the crank handle (F) into the hole on the left of the workbench (far away from the WORKPRO badge).
- To raise the workbench, turn the crank handle (F) counterclockwise to the desired height.
- To lower the table, turn the crank handle (F) clockwise until it reaches the desired height.
- To avoid damage, do not keep turning the crank handle once it has rested at its highest or lowest position. The highest position is marked with the symbol line "MAX".

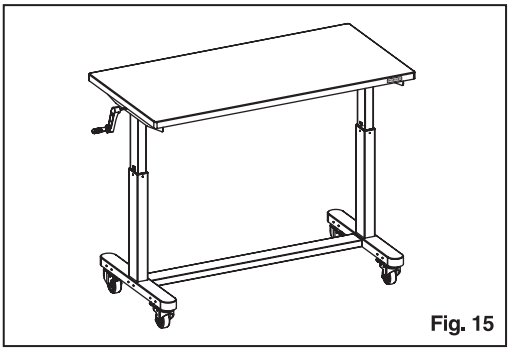

Fig. 15

NOTE:
Some minor squeaking is normal when operating the crank. Lubrication is not needed.

WORKPRO

OPERATION

3. USING THE CASTER BRAKES

- To lock the swivel casters with brake, step down the levers.
- To un lock the swivel casters with brake, raise the levers.

> **NOTE:**
> Be sure to lock four swivel casters with brake to prevent workbench from rolling or swiveling.

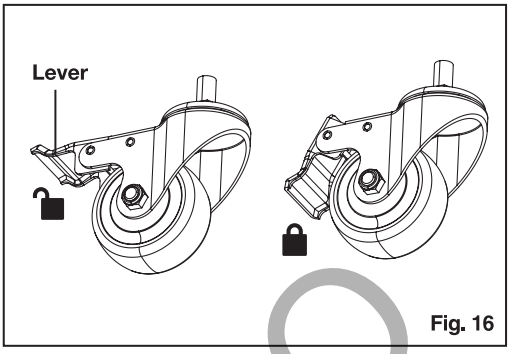

Fig. 16

4. USING THE CRANK HANDLE

- Adjust the workbench with a pull-out crank handle(F), which can be installed on the left or right as your habits.
- The handle is foldable in the crank.

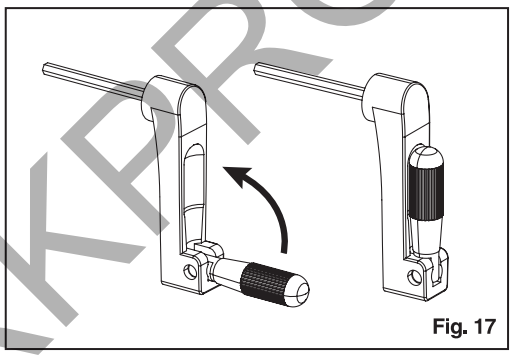

Fig. 17

WORKPRO

MAINTENANCE

Check all nuts and bolts periodically for tightness. When required tighten them.

CARE AND CLEANING

- Periodically clean the surface of the workbench with a soft damp rag and dry it with a dry one.
- Do not allow chemicals, water, or other substances to remain on the wood top for extended periods of time to reduce the risk of damage to the wood.

CUSTOMER SERVICE

If you are having difficulty in using this product and require support, please send an email to service@greatstartools.com or call 877-876-7562.