YPOO

ROWING MACHINE

USER MANUAL

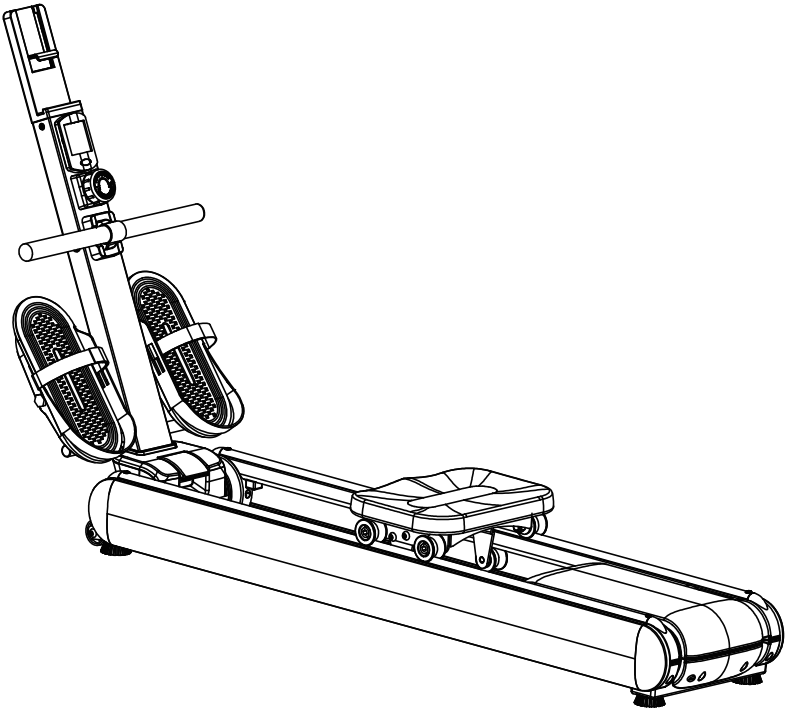

RM910

TABLE OF CONTENTS

Customer Service	01
Safety Information	02
Warm-up	04
Product Structure	05
Product Accossies	06
Installation Steps	07
Use Methods	10
Instructions for the Monitor	11
FAQ & Solutions	12
Warranty	13
After-Sales	14

Email: support@ypoo.uk
Hotline: +44 1797905007

01.CUSTOMER SERVICE

Thank You for Your Purchase!

For any issues such as damaged or defective products, questions about replacement parts, or any other service support, please contact our customer service department using the following methods:

Email: support@ypoo.uk

Response Time : **12-24 Hours**

Hot line : *+44 1797905007*

To receive the quickest response, especially during peak business hours, emailing us with your ***Order ID*** and ***Description of Parts*** (Adding photos or videos would be helpful)is the best method.

Important:
Please do not return this product without first contacting our customer service.

02.SAFETY INFORMATION

TO REDUCE THE RISK OF INJURY, PLEASE READ INSTRUCTIONS IN FULL BEFORE USE

1.It is important to carefully read this instruction manual in its entirety before assembling and using the training equipment. Proper installation, maintenance, and usage of the equipment are necessary to achieve safe and effective training results. All users must be familiar with the warnings and precautions associated with the equipment.

2.Before using the training equipment, users should consult with a physician regarding their physical condition to prevent accidents and ensure safe training. If the user is under treatment for conditions such as heart disease, high blood pressure, or high cholesterol, they must consult a physician before training.

3.Always monitor your physical condition during training, as improper exercise can negatively impact your health. If you experience discomfort, such as headache, chest tightness, irregular heartbeat, shortness of breath, dizziness, lightheadedness, or nausea, stop exercising immediately and consult a doctor. Only resume training with medical approval.

4.This training equipment is intended for adult use only. Children must stay away from the equipment and should not play with it. People with sensory or cognitive impairments or lacking experience and knowledge should use the equipment only under supervision and with an understanding of the risks involved.

5.Place the equipment on a hard, level surface indoors, with a protective mat underneath to prevent floor damage. Ensure a clearance of at least 1 meter around the equipment, with a safety area of 2000 x 1000 mm at the rear of the machine.

6.Before using the training equipment, check that all bolts and nuts requiring tightening are secure for safe use.

7.Regular maintenance and care of parts that are prone to wear, tear, or breakage are essential for safe use of the training equipment.

8.Ensure that the equipment is used only as directed in the manual. If you discover defective parts during assembly or maintenance, or if you hear unusual sounds during use, stop using the equipment immediately. Resolve all issues before resuming use.

9.Wear appropriate clothing during use. Avoid loose clothing, as it can get caught in the equipment and hinder operation or potentially trap the user.

02.SAFETY INFORMATION

10.This training equipment is for home use only, with a maximum user weight of 150 kg and maximum height of 190 cm.
11.Children should not clean or perform maintenance on this equipment without supervision.
12.Only trained personnel should replace the device's battery.
13.For safety reasons, the normal usage range should not exceed 45 strokes per minute.

SAVE THESE INSTRUCTIONS

1.This training equipment is not intended for medical use.
2.Take safety precautions when lifting or moving the equipment. Use proper techniques, and seek assistance if necessary.
3.Place the equipment in a safe location, away from children, to prevent accidents. The equipment should not be stored in an upright position to avoid hazards associated with upright storage.
4.This rowing machine is a non-speed-dependent training device.
5.The rowing machine is suitable for HC classification.

Warning

Consult your physician before beginning any exercise program. This is especially important for individuals over the age of 35 or those with pre-existing health conditions. Read all instructions thoroughly before using any equipment.

03.WARM-UP

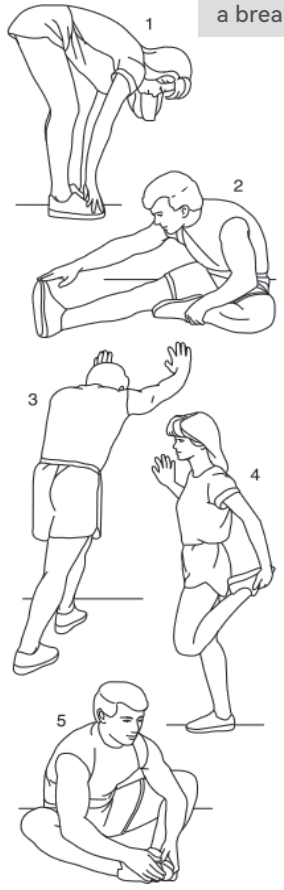

1.Stretch down:

Bend your knees slightly with your body stretch down slowly, let your back and shoulders relax, and try to extend your hands to touch your toes， Hold for 10-15 seconds and take a break for a few seconds.Repeat 3 times.

2.Hamstring stretch:

Sit down on a clean cushion, straighten one leg and place the other leg inward towards the thigh and snug on the inside of the straightened leg. In the meantime,try to touch the toes of your straitened leg with the hand at the same side. Hold for 10-15 seconds and take a break for a few seconds.

3.Calf and Achilles Tendon Stretches:

Place both hands against the wall while standing with one foot behind the other, keeping your back leg straight and both heels planted on the ground while leaning against the wall. Hold for 10-15 seconds and take a break for a few seconds. Repeat 3 times for each leg.

4.Quadriceps Stretch:

Hold your body steady with your left hand holding against the wall and right hand reaching back to grab your right heel and pull it slowly towards your hips, until you feel the muscle tightness at the front side of your thigh. Hold for 10-15 seconds and take a break for a few seconds. Repeat several times.

5.Inner thigh Stretch:

Sit on the floor with your two feet holding against each other and your knees pointing to the opposite directions, grab your feet with your hands and pull them toward your groin. Hold for 10-15 seconds and take a break for a few seconds. Repeat 3 times.

04.PRODUCT STRUCTURE

Help you enjoy exercising at home

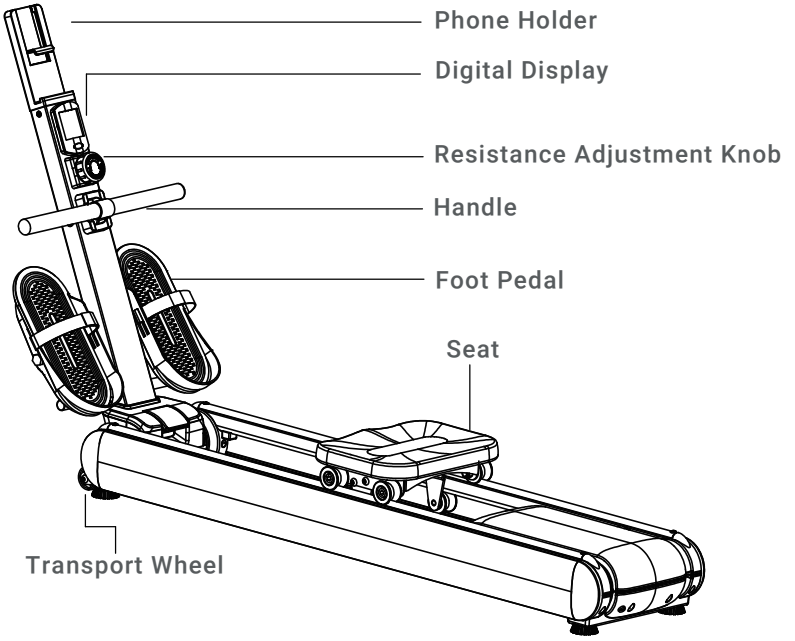

Model	RM910
Color	Black
Product Size	63.6*16.3*31.9inches
Power Input	AAA Battery *2
Default Warranty Period	12 Months

05.PRODUCT ACCESSORIES

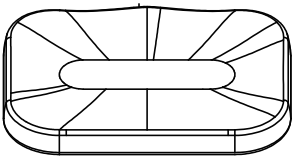

Seat Cushion*1

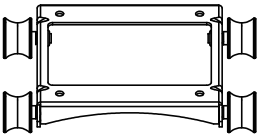

Seat Cushion Frame*1

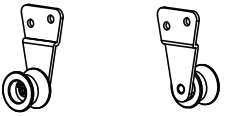

(C/L & C/R) Seat Cushion Fixing Wheels*2

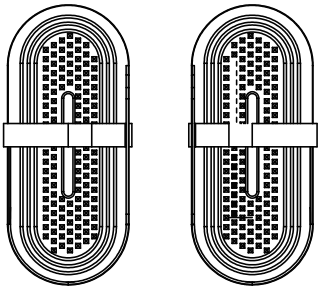

Left and Right Foot Pedals*2

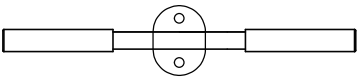

Foot Pedal Limiting Rod*1



M12*150/*2

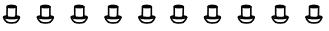

M8*10/*10

06.INSTALLATION STEPS

Step 1 :

Open the packaging and take out the rowing machine. Remove the accessories from the inner packaging. Pull up the instrument stand in the direction of the arrow and press down on the handle.

Note: To fold it, lift the handle and then press down to fold the instrument stand. (Figure: 1-1)

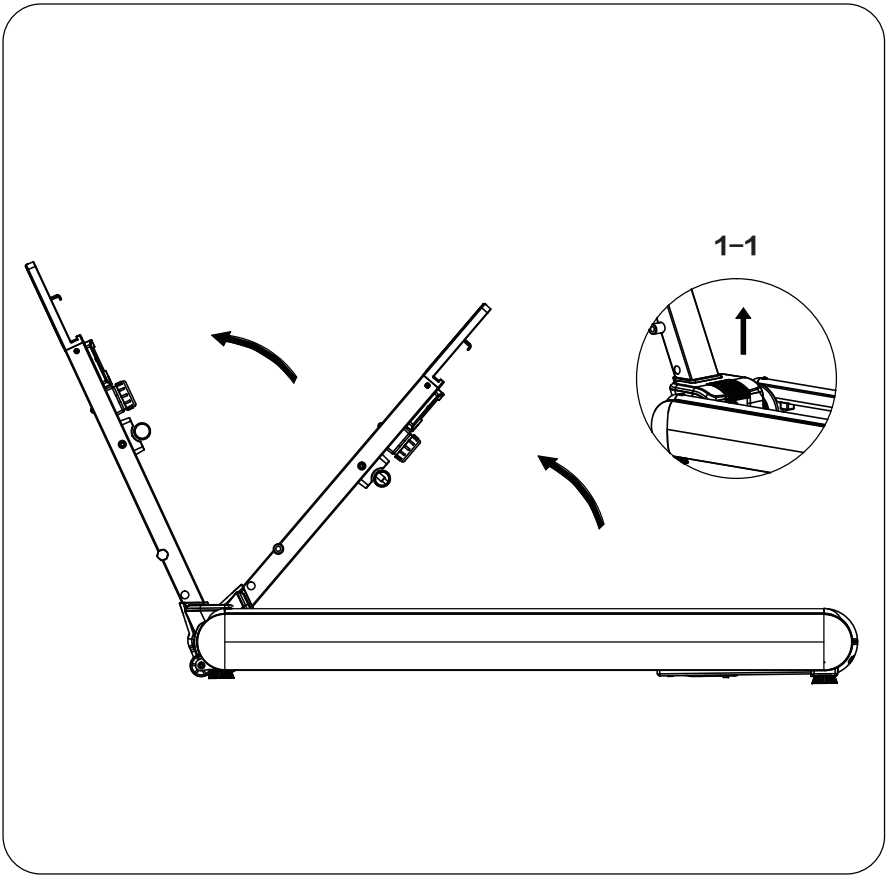

06.INSTALLATION STEPS

Step 2 :

1. Find A Seat Cushion / B Seat Cushion Frame / M8*10*4pcs.
Place Seat Cushion A upside down on the ground, and place Seat Cushion Frame B upside down on the back of Seat Cushion A. Use an S5 hex key to tighten the four M8*10 button head socket cap screws on the seat cushion.

2. Find (C/L & C/R) Seat Cushion Fixing Wheels / M8*10*4pcs
Place the installed seat cushion upright on the main frame's slide rail. Take the C/R seat fixing wheel and align the pulley underneath the slide rail from the inside of the main frame. Use an S5 hex key to tighten the two M8*10 button head socket cap screws from the outside of the B seat bracket, passing through and securing the C/R seat fixing wheel.(The installation method for the C/L seat fixing wheel is the same as for the C/R seat fixing wheel.) (Figure: 2-2)

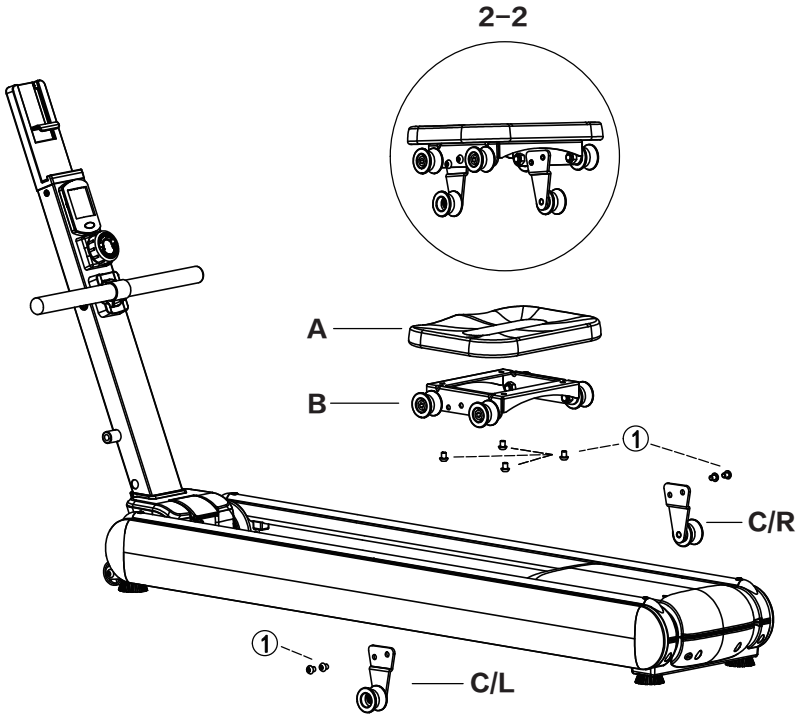

06.INSTALLATION STEPS

Step 3 :

1. Find (D/L & D/R) Foot Pedals / M12*150*2pcs

Take the D/L left pedal, use two M12*150 hex bolts to pass through the pedal mounting hole, and pre-tighten them on the instrument stand. Use a 17# open-end wrench to fully tighten the bolts. (The installation method for the D/R right pedal is the same as for the D/L left pedal.)

2. Find E Foot Pedal Limiting Rod / M8*10*2pcs

Take the E pedal stop rod and pre-tighten it on the instrument stand using one M8*10 button head socket cap screw. Then, use an S5 hex key to fully tighten the bolt.

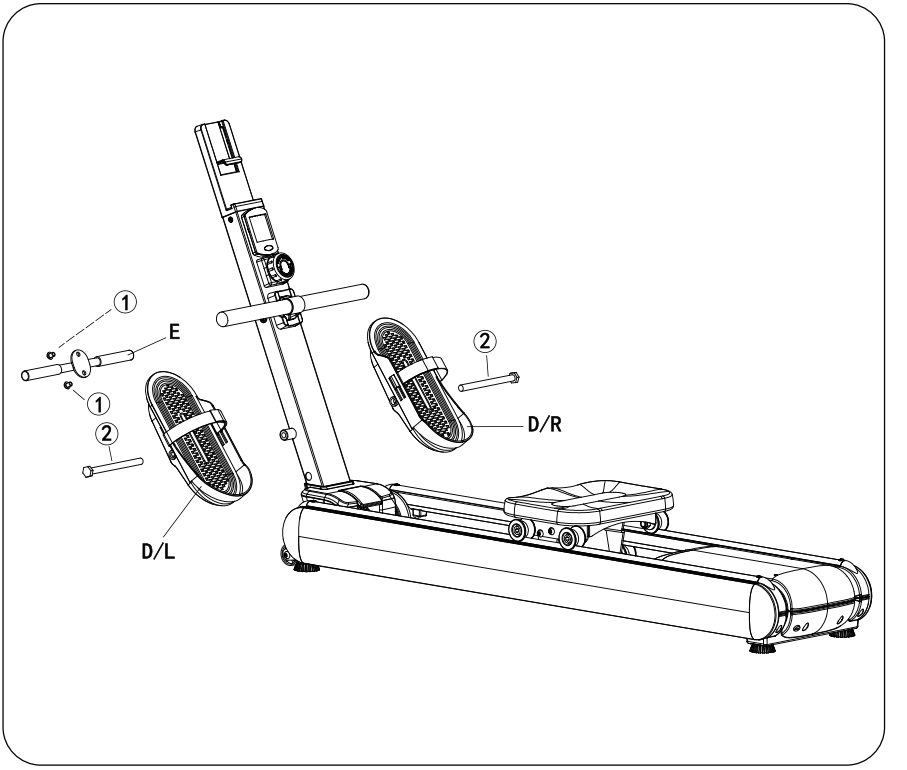

07.USE METHODS

About the rowing machine

Rowing machines simulate the motion of rowing, providing a smooth, enjoyable, and challenging workout. Each stroke engages the upper and lower limbs, back, waist, abdomen, and legs, offering a full-body workout. It's especially effective for toning the waist, abdomen, and upper arms, making it a great choice for whole-body fitness and body shaping.

Hold the posture:

Hold the rowing handle with both hands, hold your back straight, straighten your arms forward, relax your shoulders, look straight ahead, tighten your thighs tight and your feet perpendicular to the ground.

Row backwards:

The legs and arms together, pull the handle back, only when the handle over the knee, the body in full force and the body and legs at a certain Angle open, ready to bow.

Row backwards:

Hold your legs straight, pull your hands down to your chest, sit back at a 90-degree Angle, tighten your torso, relax your shoulders, and look up straight ahead.

About boating posture:

In the previous rowing exercises, first practice the correct movements and the frequency and rhythm of rowing. You can learn more about the different training stages and movements of boating techniques through an online video tutorial.

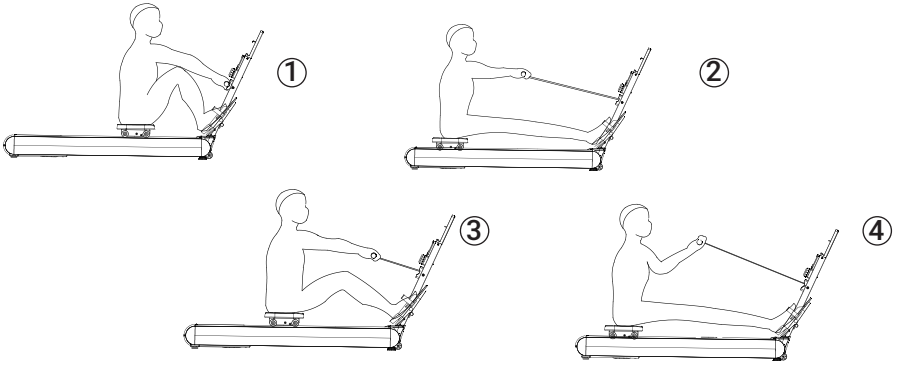

08.INSTRUCTIONS FOR THE MONITOR

The mainly displays instructions of the LCD Display

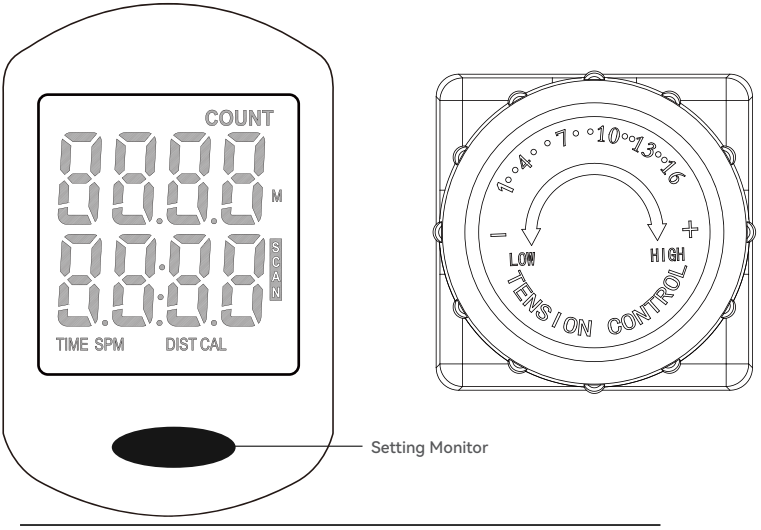

Tips: Setting Button
1. Function Selection: Press the setting button to choose the function you wish to display.
2. Data Reset: Press and hold the setting button for 3 seconds to reset all workout data to zero.

Instruction for Operation

- TIME (0:00-99:59): Press to show workout time.
- COUNT (0-9999): Displays stroke count.
- CAL (0.0-999.9): Displays calories burned.
- SPM (0-999): Displays strokes per minute.
- DIST （0.0-999.9） ：Displays distance rowed.
- APP (YPOOFIT/Kinomap): Connects via Bluetooth.

Instruction for Operation

- Levels 1-8: Light resistance (warm-up or beginners).
- Levels 9-12: Moderate resistance (steady workouts).
- Levels 13-16: High resistance (intense training and muscle).

Resistance Knob:
Turn clockwise to increase resistance up to level 16; turn counterclockwise to decrease resistance, going all the way down.

Notes:
If no movement signal is detected within 4 minutes, the display will automatically enter sleep mode.
If the display appears dim, replace the batteries.
This product uses two AAA batteries.

09.FAQ & SOLUTIONS

How to improve the effect of exercise

Like muscle exercise, aerobic exercise requires more blood flow and a higher heart rate, which improving the function of the cardiovascular system. Heart rate is generally judged by your pulse reading, your pulse is safe and effective, between the maximum heart rate of 87% to 72% is called the training target area, training target should be gradually improved by making a training plan, at least 3-4 times a week, 15-20 minutes

Warning: Do not try to exercise beyond the target heart rate, must gradually, if a history, under the guidance of a doctor; people over 35-40 years without normal training, we advise you not to pass the doctor's warning. You must remember a few minutes of warm-up and cooling time (Figure B below)

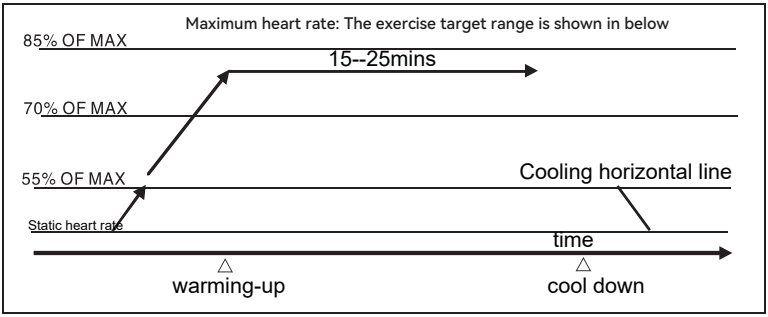

Problem	Reason	Possible Solution
The rack is uneven	1. The ground is uneven or has debris. 2. The frame is not leveled when the base is assembled	1. Remove debris. 2. Release the connecting bolt of the frame and level the base before leveling the bolts. 3. Adjust the rear bottom tube eccentric foot sleeve
The hand is not stable	The thread loose	Tighten the bolt
The ating parts have a sound	Gap dysregulation	Turn on the cover adjustment
Turn weakly	1. Increase of magnetic resistance gap 2. The fine tuner is damaged	1. Open the cover for adjustment 2. Replace 3. Open the cover for adjustment

Please contact Customer Support if there are any problems about the rowing machine via support@ypoo.uk *or +44 1797905007*(See Page 1).

10.WARRANTY

MANUFACTURER'S LIMITED WARRANTY

We warrants to the original purchaser that this product is free from defects in material and workmanship when used for the purpose intended, under the conditions that it has been installed and operated in accordance with owner's

COMPONENT LENGTH OF WARRANTY

Structural Frame 1 year For Home Use Only

All Other Components 90 days For Home Use Only

Exclusions from Warranty Coverage:

YPOO FITNESS does not warrant against and is not responsible for, and no implied warranty shall be deemed to cover, any product failure, product malfunction, or damage attributable to:

1.Improper installation and/or failure to abide by our installation guidelines;

2.Use of this product beyond normal home use, or in an application for which it was not designed;

3.Cosmetic items such as scratches, dents or discolorations;

4.Damage caused by normal wear and tear, vandalism, accidental or by animals;

5.Any act of Nature (such as fire, flooding, snow, ice, hurricanes, earthquakes, lightning or other natural disasters), environm ental condition (such as air pollution, mold,mil-dew, etc.) or staining from foreign substances (such as dirt, grease,oil, etc.);

11.AFTER-SALES

YPOO FITNESS, using its sole discretion, will either repair or replace free of charge any part(s) proven to be defective under normal home use.Any repair or replacement shall provide no new warranty coverage, but shall retain only the remaining portion of the original product's warranty.This warranty is offered only to the original purchaser and is not transferable. Proof of original purchase is required.

When ordering replacement parts please have the following information ready:

1.Order Number

2.Description of Parts

(Adding photos or videos would be helpful)

3.Part Number

4.Date of Purchase

Sport Makes Me Different

IMPORTANT:
Read all instructions carefully before using this product. Retain this owner's manual for future reference. The specifications of this product may vary from this photo, subject to change without notice.

Email: support@ypoo.uk
Hotline: +44 1797905007