Owner’s Manual

Coredy R750

Important Safety Information

The robot must be used in accordance with the directions of this Instruction Manual. Coredy Inc cannot be held liable or responsible for any damages or injuries caused by improper use.

⚠ WARNING

To reduce the risk of injury or damage, keep these safety precautions in mind when setting up, using and maintaining your robot:

- Read all safety and operating instructions before operating your robot.
- Retain the safety and operating instructions for reference afterwards.
- Heed all warnings on your robot, battery, charging Dock and in the owner's manual.
- Follow all operating and use instructions.

Use Restrictions

- Your robot is for indoor use only. Do not use the robot outdoor, commercial or industrial environments.
- Before using this device, pick up the objects scattering on the floor, including but not limited clothes and important papers.
- Your robot is not a toy, please do not sit or stand on this device. Small children and pets should be under supervision when your robot is operating.
- Store and operate your robot in the environment with room temperature only.
- Do not use this device to pick up anything that is burning or smoking.
- Do not use this device to pick up spills of bleach, paint, or other chemicals, or anything wet.
- If the room to be cleaned contains a balcony that a physical barrier should be used to separate from the balcony to ensure safe operation.

- This appliance is not intended for use by persons (including children) with reduced physical, sensory or mental capabilities, or lack of experience and knowledge, unless they have been given supervision or instruction concerning use of the appliance by a person responsible for their safety.
- Children should be supervised to ensure they do not play with the robot. Cleaning and maintenance shall not be performed by children without supervision.
- Do not place anything on top of your robot.
- Be aware of that the robot moves on its own, please watch out as walking in the area that the robot is operating.
- Do not operate the robot in areas with exposed electrical outlets in the floor.

Battery and Charging

- Use only rechargeable battery packs with the correct specification approved by Coredy.
- To use a standard outlet for charging only. Product may not be used with any type of power converter. The Use of other power converters will immediately void the warranty.
- Do not use a Charging Dock with a damaged cord or plug. If the cord or plug is damaged, it must be serviced by the manufacturer or similarly qualified persons.
- Please remember to remove the battery from your robot and accessories if not used in the long-term storage or transportation.
- Charge indoors only.
- Your robot's Charging Dock may be protected with a surge protector in the event of severe electrical storms.
- Never handle the Charging Dock with wet hands.
- Always disconnect your robot from the Charging Dock before cleaning or maintaining it.
- Please ensure voltage rating for enclosed Charging Dock matches standard outlet voltage.
- Used battery packs should be placed in a sealed plastic bag and disposed of safely according to local environmental regulations.
- Before every use, check the battery pack for any sign of damage or leakage. Do not charge damaged or leaking battery packs.

- If the battery pack is leaking, contact Coredy Customer Service for disposal.
- The battery pack must be removed from the robot before disposal.
- Do not crush or dismantle battery packs. Do not heat or place the battery pack near any heat source.
- Do not incinerate the battery pack. Do not short-circuit the battery pack.
- Do not immerse the battery pack in any liquid.

Notice

The symbol on the product or its packaging indicates:

Do not dispose of electrical appliances as unsorted municipal waste, use separate collection facilities. Contact your local authority for information regarding the collection systems available. If electrical appliances are disposed of in landfills or dumps, hazardous substances will leak into the groundwater and get into the food chain, damaging your health and well-being. Please contact your local or regional waste authority for more information on collection, reuse and recycling programs.

FCC Statement

This device complies with Part 15 of the FCC Rules. Operation is subject to the following two conditions: (1) this device may not cause harmful interference, and (2) this device must accept any interference received, including interference that may cause undesired operation.

About Your Robot

LED Indication

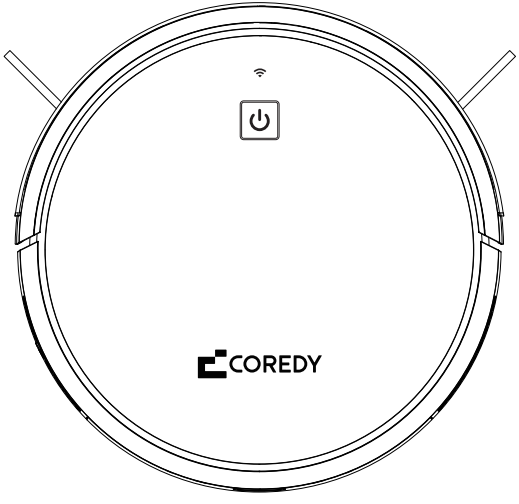

Status Light	Status
Solid Blue	Cleaning/ Standby/ Fully Charged
Solid Purple	Battery in low power and returning to Charging Dock
Flashing Purple	Charging
Off	• Robot is off • Sleep Mode (to conserve power, the light automatically turns off when robot is not docked on the Charging Dock and has been inactive for 5 minutes.)
Flashing/Solid Red + Beeping	Robot has an error, refer to the Troubleshooting for solutions. Contact Coredy support team if problem persists.

Start/Stop Cleaning/Reset Wi-Fi Connection

- Press ⏻ to start cleaning
- Press ⏻ again to pause cleaning
- Press and hold ⏻ for 5s to reset Wi-Fi connection

Robot

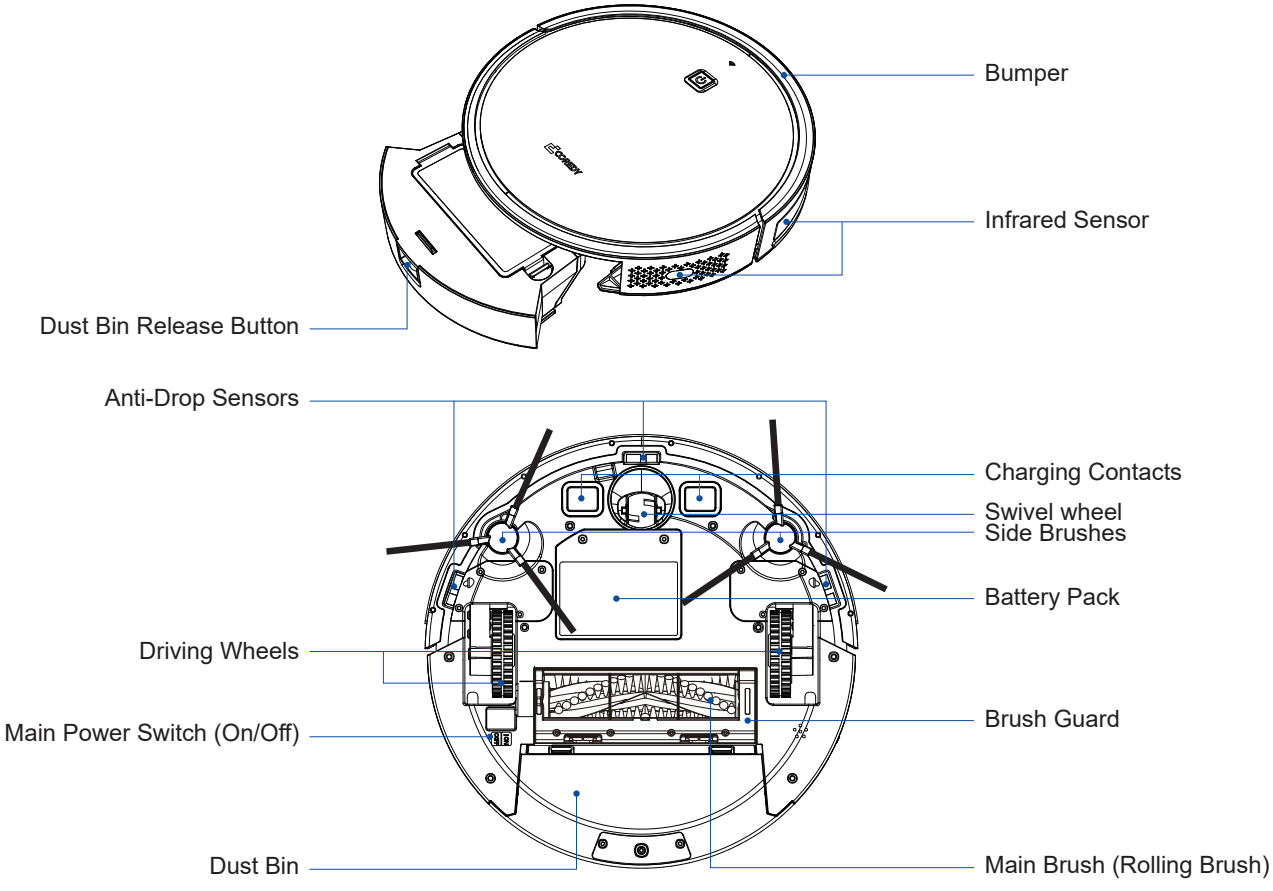
Bumper
Infrared Sensor
Dust Bin Release Button
Anti-Drop Sensors
Charging Contacts
Swivel wheel
Side Brushes
Battery Pack
Driving Wheels
Brush Guard
Main Power Switch (On/Off)
Dust Bin
Main Brush (Rolling Brush)

Charging Dock

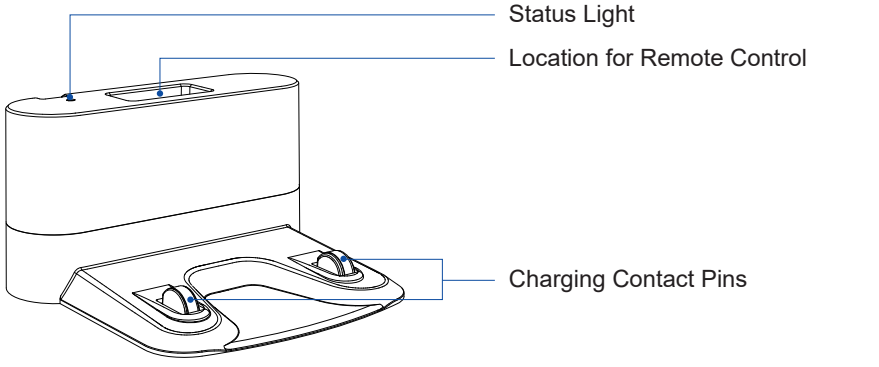

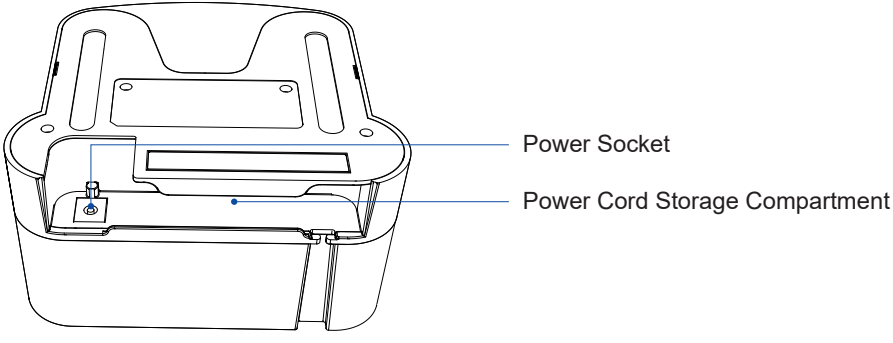

Using Your Robot

Prepare Your Home

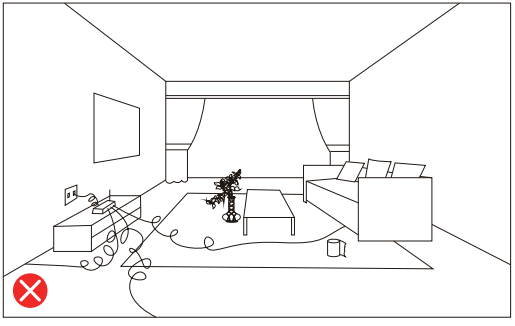

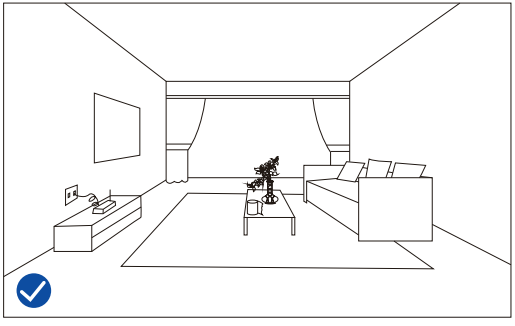

Before using this device, pick up the objects scattering on the floor, including but not limited clothes and important papers, curtains, cords.

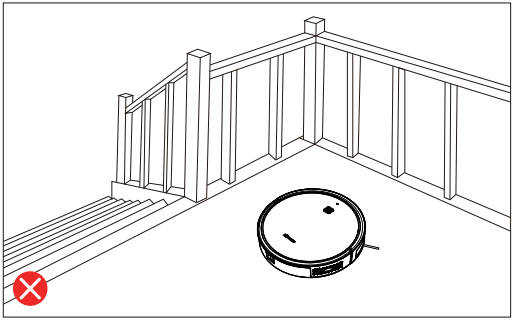

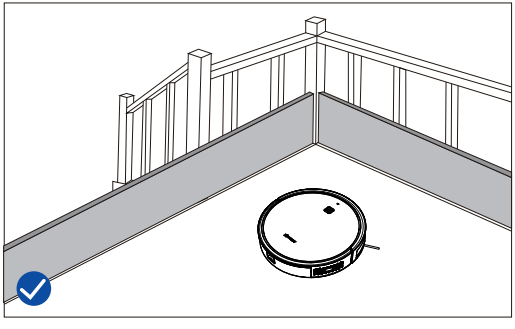

If the room to be cleaned contains a balcony that a physical barrier should be used to prevent access to the balcony and ensure safe operation.

Place Charging Dock

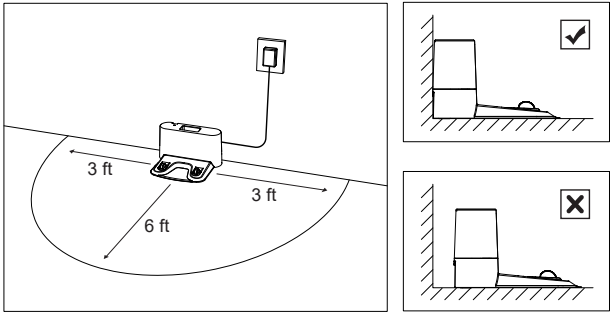

1) Plug in the Charging Dock and place remaining wire into the trunking at the bottom of the Charging Dock.

2) Place the Charging Dock on a hard, level surface and against a wall.

3) Place the Charging Dock against a wall, and make sure it is in an open and uncluttered area leaving at least:

- 2 meters (6 ft) in the front of the Charging Dock
- 1 meter (3 ft) on both sides of the Charging Dock

Note: Failure to place the remaining wire into the trunking may cause Robot to get stuck while recharging or cleaning.

Install Side Brushes

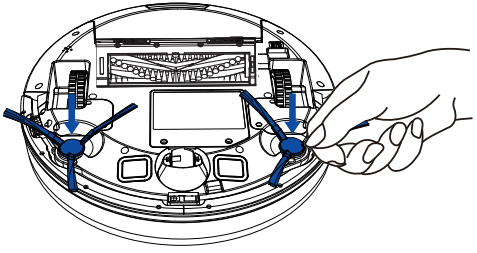

Attach Side Brushes to the bottom of Coredy R750 by pressing a brush into each slot until it clicks.

Charge Your Robot

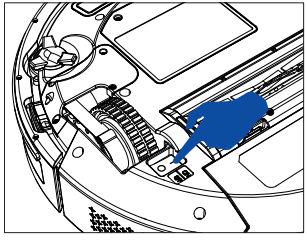

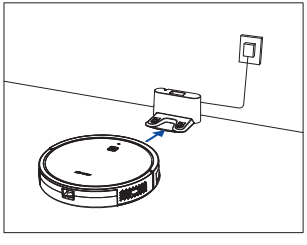

1) Turn on the Main Power Switch on the bottom of Robot.

2) Place Robot on the Charging Dock, make sure the charging contact pins on the Charging Dock match up with those underneath the robot. If successful, you will hear a series of tones. Once the ⏻ Power Button illuminates, Coredy R750 is ready to use.

Note: Robot comes with a partial charge, battery should be fully charged before using, it may take up to 5-6 hours to fully charge.

Download the Coredy Robot App

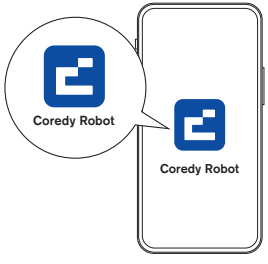

Download on the App Store

Get it on Google play

- Scan above QR code or search for Coredy Robot in the app store to download the app to your smart devices.
- Follow the in-app onscreen steps to complete the Wi-Fi connection.
- You then will be able to control your robot via the app. Refer to the App Installation Guide for details.

Please call +1-800-999-8470 for step by step guidance to all your app questions.

Start/Stop Cleaning

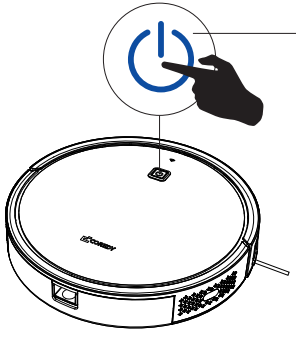

Press ⏻ to Start / Pause / Resume cleaning.

Note: Make sure the Main Power Switch on the bottom of robot is turned on before use.

Regular Robot Care

To keep your robot running at peak performance, please clean and maintain your robot regularly. If you notice robot picks up less debris from your floor, then empty the bin, clean the filter and clean the main rolling brush.

Robot Part	Care Frequency	Replacement Frequency
Filter	Once per week (twice per week in homes with pets)	Every 2-3 months
Side Brush	Once per week (twice per week in homes with pets)	Every 2-3 months (or when visibly worn)
Rolling Brush	Once per week (twice per week in homes with pets)	Every 3-6 months
Brush Guard	Once per week	Every 3-6 months
Mopping Cloth	After each use	Every 3-6 months (or when visibly worn)
Dust Bin	After each use	Every 12 months
Water Tank	After each use	Every 12 months
Anti-Drop Sensors Charging Contacts Driving Wheels Swivel Wheel	Once per week	—

- Before cleaning and maintaining, turn off the robot and unplug the adapter.
- Coredy manufactures various replacement parts and assemblies. If you think you need a replacement part, please contact Coredy Customer Care (US +1-800-999-8470) for more information.

Battery and Charging Information

Lithium Ion Battery

Important: Lithium ion batteries and products that contain lithium ion batteries are subject to stringent transportation regulations. If you need to ship this product (with the battery included) for service, travel or any other reason, you MUST comply with the following shipping instructions:

- Remove the lithium ion battery from the product
- Place a piece of tape over the battery's metal charging contacts
- Reinstall the battery (with the tape on it) in the product and secure the battery door
- Package the product in its original packaging or in your own packaging that prevents any movement during transportation
- Ship via ground transportation only (no air shipping)

Battery Charging

To extend battery life, always keep robot charged on the Home Base when not in use.

Battery Storage

If storing robot off of the Charging Dock, remove the battery first. Then store robot and the battery in a cool, dry place.

Battery Disposal

Contact your local waste management authority for battery recycling and disposal regulations in your area.

Battery Replacement

You can visit Coredy's website http://shop.coredy.com to purchase the battery or other accessories for the robot.

Troubleshooting

Robot will tell you something is wrong with a two-tone distress sound followed by message. The indicator will also blink or light red. Refer to the chart as below to resolve Robot's problem. If the problem is not resolved, please contact our COST FREE customer service team for more assistance.

Rebooting Instructions

For some errors, rebooting Robot may resolve the problem. To reboot Robot, press the power switch on the bottom on Robot, you will hear an audible tone signifying a successful reboot.

Indicator Lighting Red

Robot Blinks and Sounds		Likely Cause	What to Do
Indicator Lighting Red	One beep	• Robot's driving wheel is stuck.	• Clean the driving wheel, then press the power button to restart the robot.
	Two beeps	• Robot's side brush is stuck.	• Clean the side brush, then press the power button to restart the robot.
	Three beeps	• Robot's vacuum fan is stuck or its filter is clogged.	• Remove and empty robot's dust bin. • Clean robot's filter, then briskly tap the bin to loosen any remaining trapped debris. • Make sure the vacuum inlet is not blocked by any hair or debris.
	Four beeps	• Robot's main rolling brush is stuck.	• Remove and clean the main rolling brush and brush guard, then press the power switch to restart the robot.

Indicator Flashing Red

Robot Blinks and Sounds		Likely Cause	What to Do
Indicator Flashing Red	Two beeps	• Robot's bumper is stuck.	• Tap robot's bumper several times to dislodge any debris that might be trapped underneath. • Press robot's bumper 5-10 times to ensure bumper contracts freely.
	Three beeps	• Robot's cliff sensors are dirty. • Robot is hanging over a drop, or it is stuck on a dark surface.	• Clean robot's cliff sensors gently with a dry cloth. • Start cleaning in a new location if robot is hanging over a drop, or on a dark surface. • Use boundary strip or a physical barrier to block off the problem area. (Boundary strips are sold separately.)
	Four beeps	• Robot's battery power level is too low. • Robot cannot return to its charging dock.	• Manually take the robot on the charging dock to charge. • Ensure there are no obstacles in front of the charging dock or starting position, wipe the charging contacts on both of the charging dock and robot with a clean, dry cloth.

Frequently asked questions

Problems	Solutions
Coredy R750 cannot be activated.	• Make sure the main power switch is in the ON position. • Make sure the battery is fully charged. • If you still have trouble, turn off the main power switch and then turn it back on.
Coredy R750 stops working suddenly.	• Check if Coredy R750 is trapped or stuck on an obstacle. • Check if the battery level is too low. • If you still have trouble, turn off the main power switch, wait for 2 seconds, and then turn it back on.
You cannot schedule cleanings.	• Make sure the main power switch on the bottom of Coredy R750 is turned on. • Make sure the time, time of day (AM/PM), and the scheduled time have been set correctly. • Check if Coredy R750's power is too low to start cleaning.
Suction power is weak.	• Check if any obstructions are blocking the suction inlet. • Empty the dust collector. • Clean the filters with a vacuum cleaner or a cleaning brush. • Check if the filters are wet due to water or other liquid on the floor. Air-dry the filters completely before use.
Coredy R750 cannot be charged.	• Check if the indicator on the Charging Dock lights up. If not, contact the Coredy Service Center to repair or replace the Charging Dock. • Dust off the charging contact pins with a dry cloth. • Check if you can hear a beep when Coredy R750 is docked onto the Charging Dock. If not, contact the Coredy Service Center to repair or replace the Charging Dock.
Coredy R750 cannot return to the Charging Dock.	• Remove objects within 3ft/1m to the left and right side and within 6ft/2m of the front of the Charging Dock. • When Coredy R750 is in the vicinity of the Charging Dock (distance within 26ft/8m), it returns more quickly. However, if the Charging Dock is located far away (distance over 26ft/8m), Coredy R750 needs more time to return. Please be patient as it walks back. • Clean the charging contact pins.

Problems	Solutions
The rolling brush does not rotate.	• Clean the rolling brush. • Check if the rolling brush and brush guard have been installed properly.
Coredy R750's movements or travel path are abnormal.	• Clean the sensors carefully with a dry cloth. • Restart Coredy R750 by turning the power switch off and on.
Coredy R750 Robot cannot connect to a Wi-Fi network.	• Make sure your Wi-Fi router supports the 2.4GHz network; the 5GHz band is not supported. • Do not use a VPN or a proxy server. • Make sure you entered the Wi-Fi password correctly. • Make sure your robot, router, and phone are close enough to ensure a strong signal strength. • If still can not connect to WiFi, call +1-800-999-8470 for step-by-step guidance.
You cannot control Coredy R750 Robot with Amazon Alexa.	• Check if there are any Internet connection problems. • Check whether you have installed the Amazon Alexa App onto your smart device and enabled "Smart Life" Skill in the Amazon Alexa App. For details, refer to the "Smart Integrations" page in the Coredy Robot App. • Make sure you have a Coredy Robot account and that it is connected to Coredy R750 Robot. • Make sure you are using correct Alexa voice-commands.
You cannot control Coredy R750 Robot with the Google Assistant.	• Check if there are any Internet connection problems. • Check if you have installed the Google Home App onto your smart device and initiated the "Coredy Robot" action in the Google Home App. For details, refer to the "Smart Integrations" page in the Coredy Robot App. • Check if you are using the proper commands when talking to the Google Assistant. When making your request, first say the wake words "Ok Google". • Repeat your question. Speak clearly to the Google Assistant.

Specifications

	Product Model	R750
	Input	19 V ⎓ 0.6 A
	Battery Voltage	DC 14.4 V
	Power Consumption	28 W
	Battery Type	DC 14.4 V Li-ion 2600 mAh
	Dust Bin Capacity	0.5 L
	Water Tank Capacity	0.3 L
	Cleaning Time	Quiet 130 mins
	Charging Time	300 - 360 mins
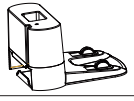	Input	19 V ⎓ 0.6 A
	Output	19 V ⎓ 0.6 A

CONTACT US

support@coredytech.com

http://shop.coredy.com

(US) +1-800-999-8470 (UK) +44-808-134-9909 (DE) +49 800 000 9581 (AU) +61 39 917 5657

@Coredy

@CoredytechOfficial

@coredylife

V3.2