# Instruction Manual

## Espresso Coffee Machine

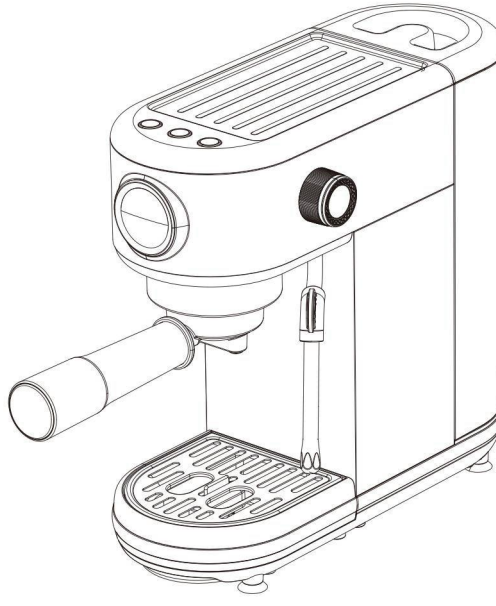

| | |
|---|---|
| Model | EM3111 |
| Voltage | 120V～ |
| Frequency | 60Hz |
| Power | 1350W |
| Water Tank Capacity | 1.3L |
| Pump Pressure | 20Bar |

# Catalogue

**Safety Tips** ..... **1**

Warning ..... **3**

**Product Introduction** ..... **4**

**Instructions** ..... **4**

Operation Guide ..... **5**

First Use ..... **8**

Coffee and Milk Frothing ..... **16**

**Maintenance and Cleaning** ..... **19**

**Indicator Lights** ..... **22**

**Troubleshooting** ..... **24**

**Environmental Protection Checklist** ..... **26**

**Please read this manual carefully and follow the steps below before using this machine:**

1. Before use, please check whether the voltage used is consistent with the product specifications.
2. The coffee machine must be connected to a grounded socket
3. The coffee machine should be supervised when in use. Children and people who lack self-care ability should not use the coffee machine.
4. To avoid damaging the coffee machine, do not place it on a hot surface or near an open flame.
5. Unplug the coffee machine when not in use or cleaning it. Allow the coffee machine to cool before installing removing or cleaning parts.
6. If the coffee machine fails to work properly due to a fault or other reasons, please take it to a qualified service provider for testing and repair.
7. If the power cord is damaged, it must be replaced by professionals from the manufacturer's maintenance department to avoid danger.
8. When the coffee machine fails, please do not use components not from the designated manufacturer, as this may harm or potential danger to the user.
9. The coffee machine should be placed on a table or flat surface, and the power cord should not be hung on the edge of the table or

counter.

10. Make sure the power cord does not come into contact with hot parts of the coffee machine.
11. When the coffee machine is working, some parts will be heated to high temperatures (such as the steam generated, funnel bracket, steam pipe nozzle, high-pressure funnel, etc.). Do not touch them directly when using them. Please hold the funnel handle when using them.
12. Do not immerse the coffee machine or power cord plug in water or other liquids.
13. When adding water to the tank, pay attention to the highest water level, which must not exceed the "MAX" mark.
14. In case of any malfunction, defect, or suspected damage caused by the machine falling, unplug the power plug immediately and do not operate the machine in question.
15. This device is intended for use in homes and similar applications, such as employee kitchens in shops, offices, and other work environments; it can't be used outdoors.
16. Please read this instruction manual carefully before using the product and keep it properly.

**Warning:**

**1. This coffee machine must be used with ground coffee powder to make coffee, and can only make coffee, coffee drinks (such as cappuccino, latte, etc.), heat milk, and make tea. Any other improper use may cause danger.**

**2. When the machine is working, do not put your hands or other parts of your body into the bottom of the funnel and steam pipe to prevent burns; do not touch the steam pipe with your hands or other parts of your body at any time. When turning the steam pipe, you can only touch the silicone sleeve on the steam pipe to turn it to prevent burns.**

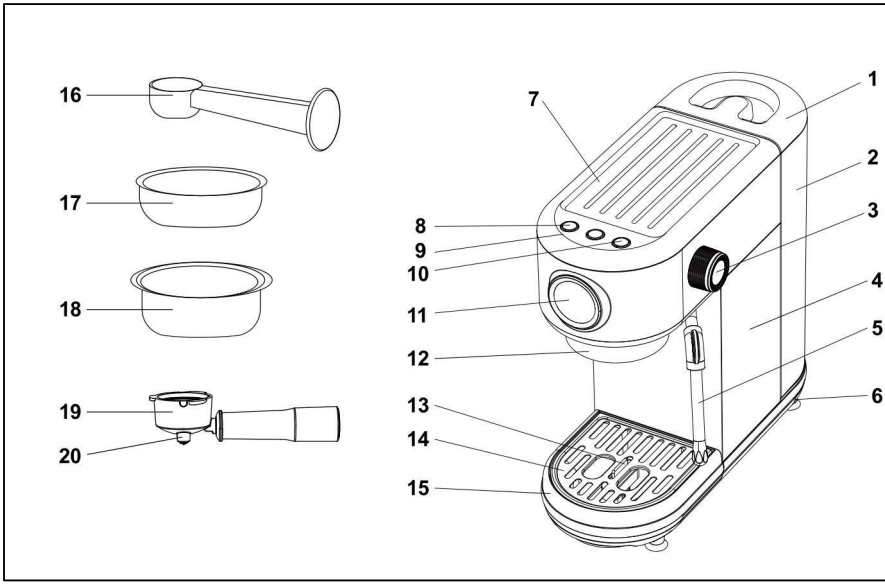


**1. Tank cover 2. Water tank 3. Steam knob 4. Main body 5. Steam nozzle/foaming tube 6. Base 7. Upper cover**

**8. Power/manual coffee button/indicator light**

**9. Single/double shot button/indicator light**

**10. Steam preheating button/indicator light 11. Pressure gauges**

**12.Funnel bracket 13. Float 14. Waste water tray cover 15. Waste water tray 16. Coffee spoon 17. Single cup coffee filter 18. Double cup coffee filter 19. Funnel 20. Coffee outlet**

# Operation Guide

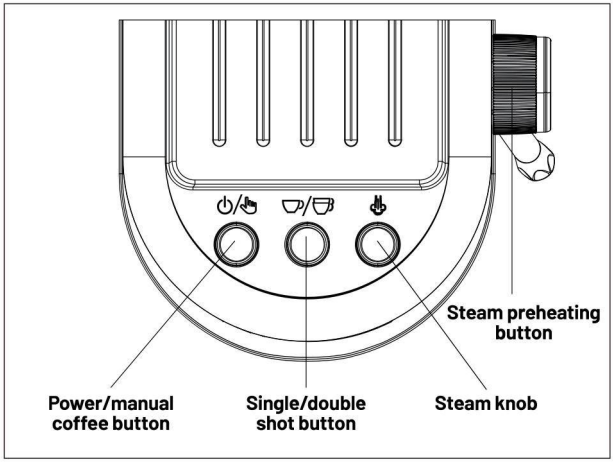


- **"⏻/✋"Power/manual coffee switch/indicator light**

1. Preheating: Plug in the power supply and press the "⏻/✋" button to turn on the machine.The "⏻/✋" and "☕/☕" indicators will flash and the machine will start to preheat (preheating takes up to 30 seconds). After preheating, the 2 lights will be on, indicating that the machine has entered the coffee or hot water-making mode.

If the "✋ " indicator light flashes rapidly after turning on the machine, it means the steam knob is in the on state. Please turn the steam knob

clockwise to the off state.

2. Manual coffee extraction: After preheating, press once to start extracting coffee. Press the button again to manually stop the extraction. If the manual stop operation is not performed, the longest extraction time of this function is about 102 seconds. During the extraction process, the "⏻/✋" indicator light flashes, and the "☕/☕" indicator light goes out. After the extraction is completed, the "⏻/✋" and "☕/☕" indicators are always on.

- **"☕/☕"Single/double shot espresso switch/indicator light:**

After preheating is completed, single click(within 1 second) for single shot coffee extraction, double click(within 1 second) for double shot coffee extraction. During the extraction process, the "☕/☕" indicator light flashes, and the "⏻/✋" indicator light goes out. When the set amount of coffee is reached, the machine automatically stops working (including the coffee soaking time), and the coffee extraction ends. The "⏻/✋" and "☕/☕" indicators are always on. During the extraction process, if you press the "☕/☕" button once, the machine will stop working.

- **"⏻"Steam preheating switch/indicator light:**

Press the "⏻" button once, and the machine starts preheating, the indicator light flashes during the preheating process, and the indicator light stays on after the preheating is completed, and the machine enters the steam-making mode. (If you press the button again during the whole process, the machine switches from the steam mode back to the coffee extraction mode, and the "⏻/" and "/" indicators flash quickly, indicating that the boiler temperature is too high in the coffee mode, and it needs to be cooled naturally or manually turned on the hot water function to cool it down. Coffee can only be extracted after the "⏻/" and "/" indicators stay on)

- **Steam Knob:**

In the picture below, the steam knob is in the off position. The steam knob is turned counterclockwise to the maximum position to turn it on. There are two working states when the steam knob is turned on. When the machine is in the coffee extraction mode, the steam pipe discharges hot

water; when the machine is in the steam mode, the steam pipe discharges steam.

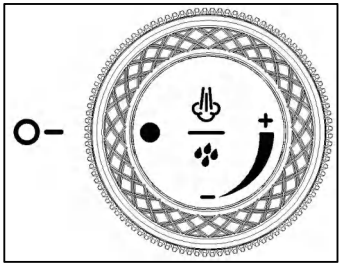

Close

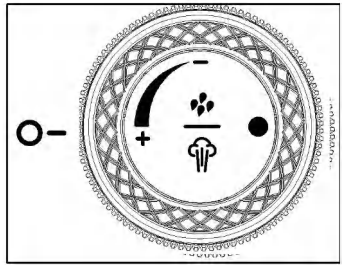

Open

**Remind:**

1. When the power is turned on, if the " " indicator light keeps flashing quickly, it means that the steam knob is not turned off. Turn the steam knob to the off position.

2. At any time when the machine is turned on, press and hold the " " button for 2 seconds to shut down the machine.

# Before First Use (Important)

1. Unpack and take out the coffee machine, check whether the accessories are complete, and clean all detachable parts.

2. Take out the water tank and remove the red silicone cap from the body.

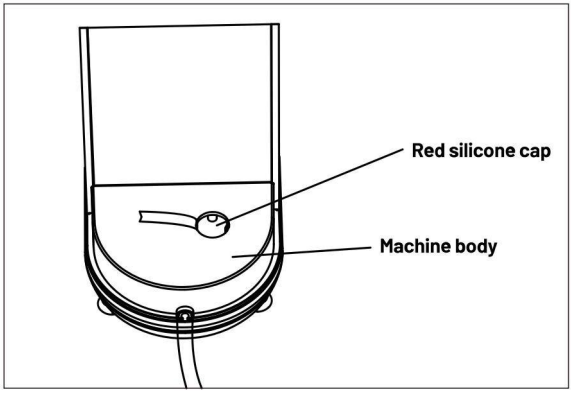


3. To ensure that the coffee you make tastes pure the first time, you need to clean the coffee machine and all removable parts. The specific steps for cleaning are as follows:

① Fill the water tank with water, making sure it does not exceed the maximum water level, then install it back on the machine and close the water tank cap.

② Hold the upper part of the machine with your hands, hold the funnel handle, and rotate the high-pressure funnel assembly counterclockwise from position " " to position " ". No coffee powder needs to be added to the high-pressure funnel. (The high-pressure funnel must be tightened). As shown in the figure below.

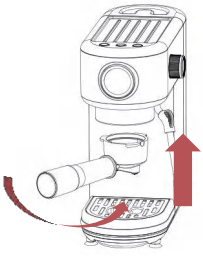

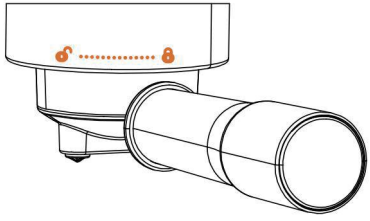

③ Place the coffee cup on the removable drip tray and align it with the coffee outlet.

④Plug the power cord into a grounded socket.

⑤Press the "⏻/" key, and the "⏻/" and "/" indicators will flash, and the machine will start to preheat. When the indicator light turns solid, the preheating is complete.

⑥After preheating is completed, turn the steam knob counterclockwise to the maximum +position, and the electromagnetic pump will work until hot water comes out of the steam pipe continuously for at least 30 seconds (this process takes 1-2 minutes), then turn off the steam switch.

⑦Double-click the "/" button to let hot water flow out to clean the coffee filter and cup.

# Making Espresso (double shot)

1. Open the water tank cover, take out the water tank, and inject an appropriate amount of water, which should not exceed the "MAX" position of the water tank.

2. Put the water tank back in its original position and cover it with the cap.

3. Plug in the power supply, press the " ⏻/☝ " button, the " ⏻/☝ " and " ☕/☕ " indicators flash, the machine starts to preheat, and when the "⏻/☝" and "☕/☕" indicators are always on, the preheating is complete.

4. Take out the high-pressure funnel assembly, add an appropriate amount of coffee powder (about 16 grams) into the double-cup coffee filter with a coffee spoon, and then use the bottom of the coffee spoon to evenly press the coffee powder. After compacting, remove the coffee powder on the edge of the filter.

**Note: If too much coffee powder remains on the edge of the filter, it may cause poor sealing and lead to water leakage.**

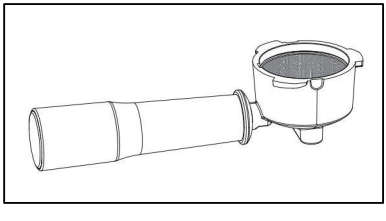

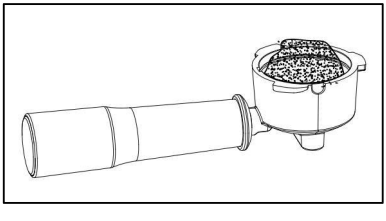

5. Hold the upper part of the machine with your hands, hold the funnel handle, and rotate the high-pressure funnel assembly counterclockwise from position " " to position " " (must be tightened), as shown in the figure below;

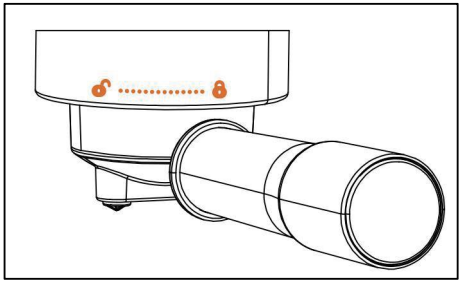

6. Place the coffee cup on the waste tray cover, aligning it with the water outlet.

7. Double-click the " " button, the " " indicator light flashes, the machine starts working and starts making espresso.

8. After the coffee is extracted, the machine automatically stops working, the " " and " " indicators are always on, and then take away the coffee cup.

**WARNING: Do not leave while the coffee is being made.**

9. After making coffee, rotate clockwise to remove the

high-pressure funnel assembly, clean the coffee grounds in the filter in time, and rinse it with hot water. Touch the single/double shots switch, flush the water outlet, install the clean high-pressure funnel assembly on the water outlet, and wait for the next coffee making.

**Note: When using, be careful of the hot parts of the machine. Especially the water outlet (the funnel), funnel and a steam pipe. Do not put your hands on the above parts for any reason during operation.**

# ★ How to make a delicious cup of coffee

The coarseness of the coffee powder grinding largely determines the quality of the coffee, If the coffee powder is ground too coarsely, the coffee will not be extracted enough, the taste will be lighter, the color will be lighter, the oil will be thinner, and the color of the oil will be white. If the coffee powder is ground too fine, it will cause over-extraction of coffee, too little coffee, too dark coffee, and too little oil.Good coffee must be made with freshly ground coffee beans. The freshness of the coffee beans is very important. Long-term storage will cause the oil in

the coffee beans to decompose.

1. Grind fresh coffee beans into coffee powder.

It is recommended to weigh the coffee each time you make it, to ensure that you add the right amount of coffee powder (**single shot: about 9 grams; double shot: about 16 grams**), and compact the coffee powder with a powder tamper.

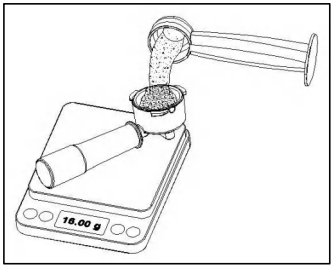


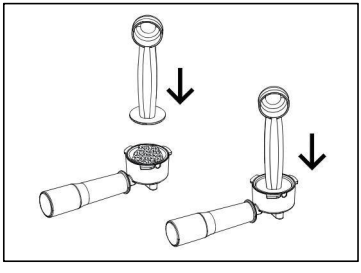

2. The surface of the pressed coffee powder is about 3mm away from the edge of the filter cup (important indicator). Too high or too low will affect the coffee extraction pressure and effect, please reduce or increase the amount of coffee powder accordingly;

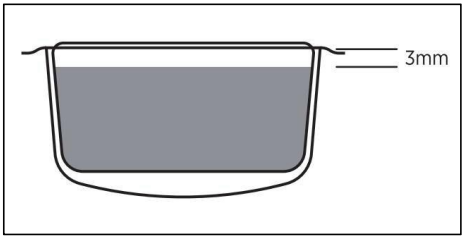


3. Coffee making time: single shot about 28 seconds, double shot about 42 seconds, manual maximum about 102 seconds, the machine has set the time.

4. The amount of coffee liquid to be made: 25-40 grams for a single cup, 55-85 grams for a double cup, 180-350 grams for manual. The amount of coffee liquid can be adjusted by the coarseness of the ground coffee powder (an important indicator).

# Making Cappuccino

1. Take a coffee cup and extract one portion of espresso.

2. Take a special steel cup and pour 1/3 cup of cold whole milk at about 39-47℉ (4-8℃)(not hot).

**Note: When choosing the size of the cup, it is recommended that the diameter of the cup mouth should be no less than 70±5mm. As the volume of the milk will increase after foaming, ensure that the cup is high enough.**

3. Press the " " to start steam preheating. At this time, the " " and " " indicators go out, and the " " indicator starts to flash. When the " " indicator stays on, the steam preheating is completed.

4. Place an empty cup under the steam pipe, turn the "steam knob" counterclockwise to the maximum position to release a small amount of water in the steam pipe. After the steam comes out, turn the "steam knob" clockwise to turn off the steam.

5. Place the special steel cup under the steam pipe nozzle and let the steam pipe nozzle float below the milk surface.

6. Turn on the steam knob to release steam, and adjust the height of the milk cup to froth the milk.
7. When the milk and milk foam reach the required amount, turn off the knob, the steam stops, pour the foamed milk into the prepared espresso, and the cappuccino is ready. You can add the appropriate amount of sugar or cocoa powder on top according to your taste.

**Note: After the steam stops spraying, please clean the surface of the steam pipe immediately and spray it for 1-2 seconds to release the residual milk in the pipe to prevent scaling on the pipe wall and inside the pipe. During operation, since the surface temperature of the steam pipe is very high, do not touch the steam pipe directly with your hands.**

# Making Hot Water

1. Make a cup and place it under the hot water spout.

2. When the "⏻/" and "/" indicators are on, turn on the steam knob switch and hot water will flow out of the steam nozzle. During the hot

water making process, the "⏻/" and "/" indicators will flash.

3. When the hot water reaches the required amount, turn the "steam knob" clockwise to the off position and the water stops flowing.

**Remind: The hot water function can also be used to quickly cool down the coffee machine.**

**Note: When using, be careful of the hot parts of the machine. Especially the water outlet (the funnel), funnel, and steam pipe. Do not put your hands on the above parts for any reason during operation.**

# Heating Liquids

1. Take a professional steel cup and pour 1/2 cup of cold liquid.

   **Note: When choosing the size of the cup, it is recommended that the diameter of the cup mouth should be no less than 70±5mm. As the volume of the milk will increase after foaming, ensure that the cup is high enough.**

2. Press the " " key to start steam preheating, the "⏻/" and "/ " indicators go out, and the " " indicator starts to flash. When the indicator

stays on, the preheating of steam is completed;

3. Place the steel cup under the nozzle of the steam pipe and let the nozzle of the steam pipe be inserted into the liquid.

4. Turn on the steam knob to release steam.

5. When the liquid has heated to the desired temperature, turn off the knob and the steam stops.

**Note: After the steam stops spraying, please clean the surface of the steam pipe immediately and spray it for 1-2 seconds to release the residual liquid in the pipe to prevent scaling on the pipe wall and inside the pipe. During operation, since the surface temperature of the steam pipe is very high, do not touch the steam pipe directly with your hands.**

# Cleaning and Maintenance

1. Please unplug the power plug before cleaning and let the coffee machine cool down to prevent burns.

2. Wipe the stainless steel surface with a clean damp cloth.

**Note: Do not use alcohol or solvents, and do not immerse the machine in water for cleaning.**

3. Use a coffee machine brush to clean the water outlet and the internal sealing ring.

4. Remove the funnel by rotating it clockwise, pour out the coffee grounds inside, and clean the filter and funnel.

5.Please clean the waste water tray and waste water tray cover in time after each use.

6. It is recommended to clean the water tank regularly

# Cleans Mineral Deposits

1. To ensure the normal function of the coffee machine, clean the internal water flow channel and the pure coffee taste, the coffee machine needs to be descaled and cleaned after 2-3 months of use.

2. Add water and descaling agent to the water tank to the MAX position (about 1.3L, the ratio of water to descaling agent is 4:1, the specific ratio is subject to the instruction manual of the descaling agent). Please use a "household coffee machine descaling agent" or go to the service center to buy a special descaling agent. If there is no descaling agent, citric acid can

be used instead (the ratio of water to citric acid is 100:3).

3. According to the coffee making steps, screw the funnel (without coffee powder) into the funnel holder to start the coffee making function.

4. Press the "⏻/☝" button, and when the "⏻/☝" and "☕/☕" indicators are on, double-click the "☕/☕" button to make two cups of coffee; then turn on the steam knob, add hot water for 2 minutes, then turn off the knob, and let the descaling agent stay in the machine for at least 15 minutes.

5. Repeat step 4 three times.

6. Then double-click the "☕/☕" button and start making coffee (multiple times) until all the descaling agent has flowed out;

7.Use tap water to make two cups of coffee (without coffee powder),repeat step 4 three times (but do not wait 15 minutes in step 4), then make two cups of coffee (without coffee powder) again, repeat until there is no water in the water tank.

8. Repeat step 7 at least 3 times to ensure that the pipes are clean.

| Power/manual coffee indicator light | Single/double shot indicator | Steam indicator light | Reason | Resolves |
|---|---|---|---|---|
| Flashing | Flashing | Off | Coffee and hot water preheating | / |
| Still on | Still on | Off | Coffee and hot water preheating completed | / |
| Breathing | Off | Off | Manual coffee making | / |
| Off | Breathing | Off | Single/double shot making | / |
| Breathing | Breathing | Off | Hot water making | / |
| Off | Off | Flashing | Steam preheating | / |
| Off | Off | Still on | Steam preheating completed | / |
| Off | Off | Breathing | Steam making | / |
| Off | Off | Still on | Steam making completed | / |
| Off | Off | Off | Shutdown | / |
| Off | Off | Off | Standby time exceeds 30 minutes | / |
| Off | Off | Flashing | The steam knob was not closed | Tighten the knob |
| Flashing quickly | Flashing quickly | Flashing quickly | Temperature sensor short circuit or open circuit | Contact us |

| | | | | |
|---|---|---|---|---|
| **Flashing quickly** | **Flashing quickly** | **Off** | **After steam production is completed, touch the steam switch (temperature is too high)** | **Wait for the temperature to drop naturally or turn on the steam switch to heat water to cool down** |

**If you cannot find the cause of the fault, do not disassemble the machine by yourself, but contact the authorized service center.**

| Problem | Possible Cause | Solution |
| --- | --- | --- |
| The machine does not produce water or too little water | No water in the tank | Add water to the water tank and pump hot water until hot water continuously comes out of the steam pipe. |
| | The input voltage or frequency does not meet the specifications | Use voltage and frequency that comply with regulations. |
| | Machine failure | Please contact us |
| The machine does not produce steam | The steam pipe nozzle is clogged | Use a needle to clean out the deposits in the nozzle |
| | No water in the tank | Add water to the water tank and pump hot water until hot water continuously comes out of the steam pipe. |
| | Machine failure | Please contact us |
| Coffee is spilling from the edge of the funnel seal | Too much coffee grounds in the filter | After turning off the machine and waiting for it to cool down, clean the remaining coffee powder on the funnel seal ring and add an appropriate amount of coffee powder to make |
| | Coffee grounds remain on the funnel seal | After the machine is turned off and cooled, clean the remaining coffee powder on the funnel seal. |
| | Multiple operations, high hot water temperature, | Turn off the power, wait for the machine to cool down, and then |

| | | |
|---|---|---|
| | vaporization | restart it. |
| | After performing the above operations, the problem still exists | Please contact us |
| The coffee does not come out or comes out too slowly | The coffee powder added is too fine and clogs the filter | After rinsing, switch to a coarser coffee powder. |
| | The filter cup hole is blocked | Use a brush or needle to clean the holes at the bottom of the filter and rinse with clean water |
| | The filter is clogged | Remove the filter with a screwdriver and clean the holes at the bottom of the filter with a brush or needle. |
| | Water tank not plugged in | Insert the water tank into place |
| Water-leaking from the bottom of the coffee machine | The water tray is full | Clean the drip tray |
| | Machine failure | Please contact us |
| Coffee machine not working | The power cord is not plugged in properly | Plug in the power cord |
| | Thermistor is open or short-circuited | Please contact the seller service center |
| | Machine failure | Please contact us |
| The steam from the steam pipe nozzle won't froth the milk | Steam indicator light flashing | Steam can only be released when the steam indicator light is on. |
| | The container is too large or the wrong shape | Use a tall narrow cup or a professional latte art cup |
| | Use skim milk | Use whole milk |

| Name and content of harmful substances in the product | | | | | | |
|---|---|---|---|---|---|---|
| Parts Name | Harmful substances | | | | | |
| | Lead (Pb) | Mercury (Hg) | Cadmium(Cd) | Hexavalent chromium(Cr(VI)) | Polybrominated biphenyls(PBBs) | Polybrominated diphenyl ethers(PBDEs) |
| Plastic parts | ○ | ○ | ○ | ○ | ○ | ○ |
| Hardware parts | ○ | ○ | ○ | ○ | ○ | ○ |
| Power cord | × | ○ | ○ | ○ | ○ | ○ |
| Electrical parts | × | ○ | ○ | ○ | ○ | ○ |
| Silicone parts | ○ | ○ | ○ | ○ | ○ | ○ |
| Packaging parts | ○ | ○ | ○ | ○ | ○ | ○ |

This form is prepared by the provisions of SJ/T 11364。

○：Indicates that the content of the hazardous substance in all homogeneous materials of the component is within the limit requirements specified in GB/T 26572.

×：Indicates that the content of the hazardous substance in at least one homogeneous material of the component exceeds the limit requirements specified in GB/T 26572.

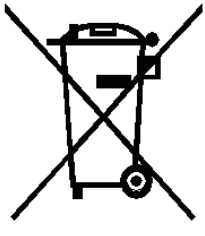

**Environmentally friendly disposal**

**You can help protect the environment!**

**Please remember to comply with local laws and regulations and hand over non-functioning appliances to appropriate waste disposal centers.**