POWER SMART®

INSTRUCTION MANUAL

2500W Inverter Generator

Model # HB5020
Item No:101520012

STOP
PROBLEMS? QUESTIONS?
DO NOT RETURN TO STORE
CALL OUR CUSTOMER HELP LINE
(872)314-0005 Mon-Fri 9-5 EST

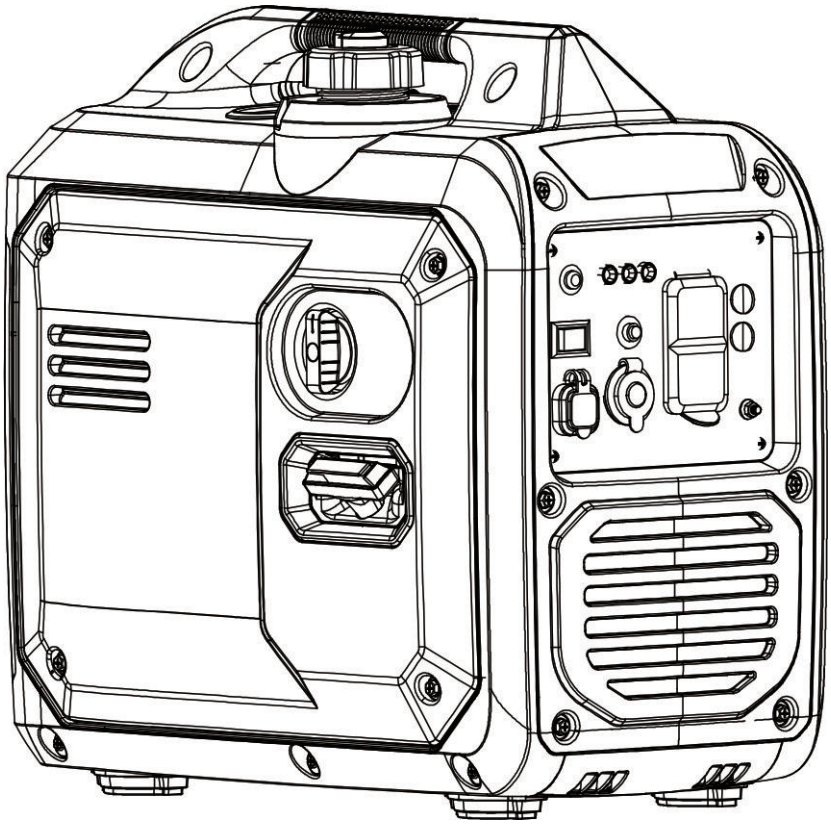

Have product questions or need technical support? Please scan the QR code to enter our official website and contact us!

Website: www.powersmartusa.com

Toll free: 1-872-314-0005 Mon-Fri 9-5 EST

Email: support@amerisuninc.com / support@powersmartusa.com

website

GENERATOR START STEPS

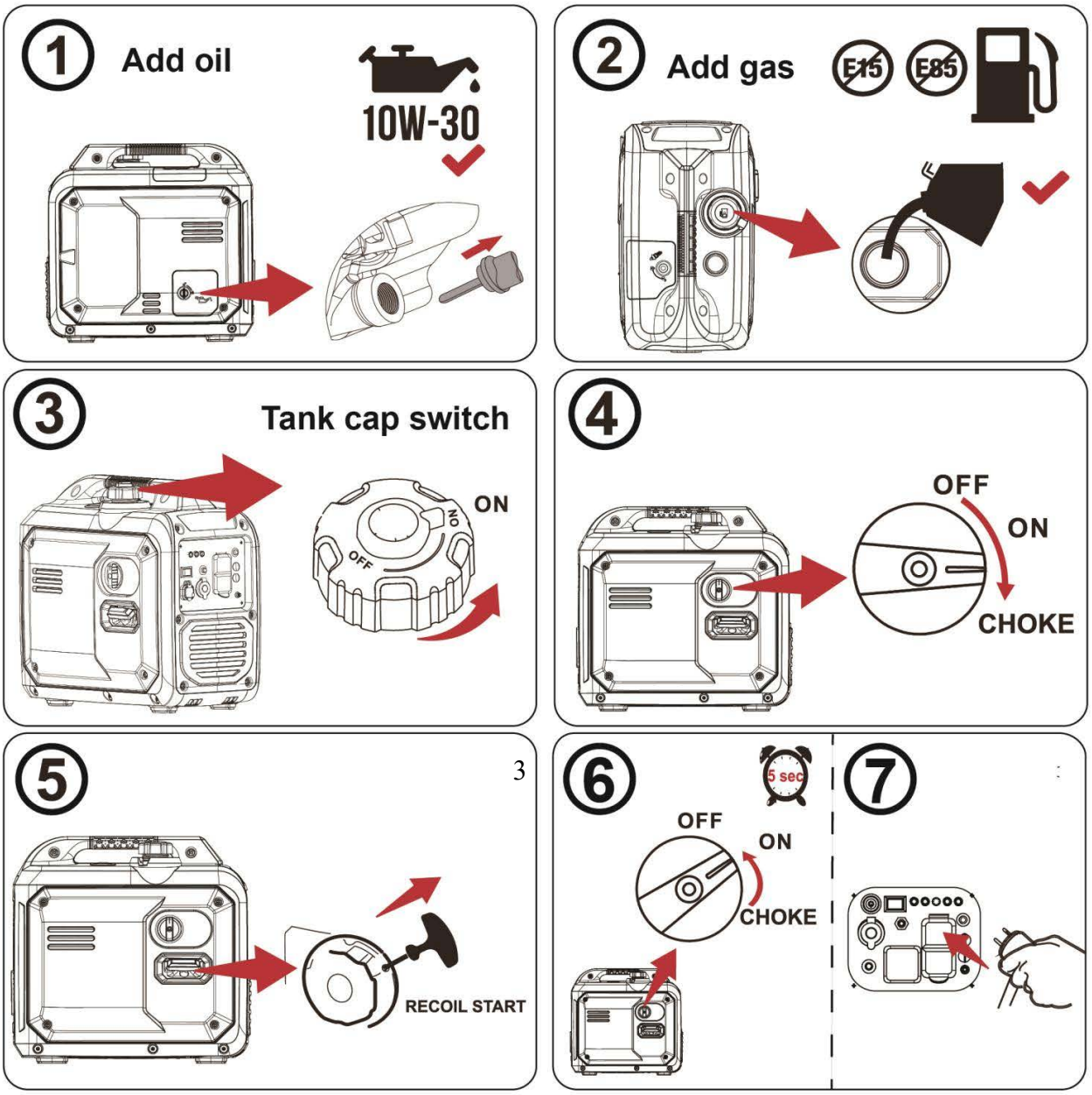

GENERATOR STOP STEPS

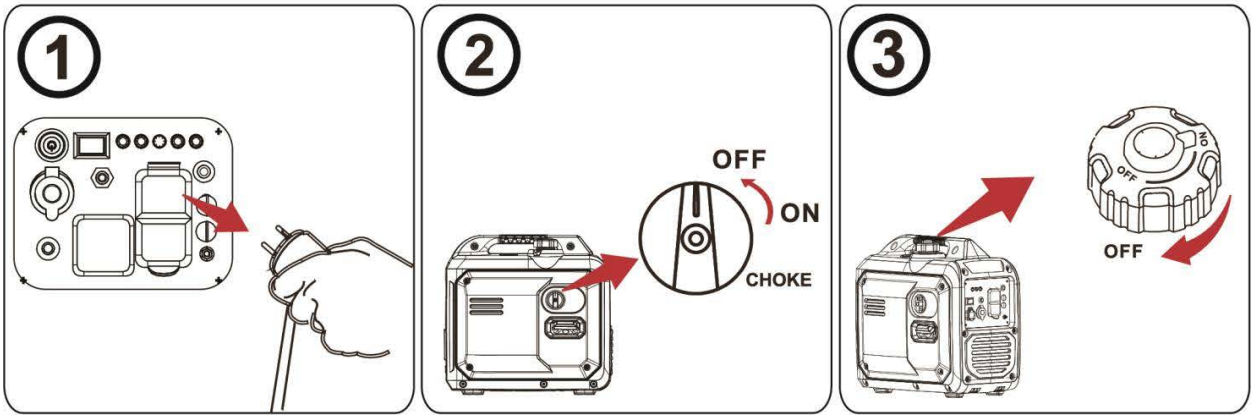

***more operating details, please refer to P16.

CONTENTS

TECHNICAL DATA 4
INTRODUCTION 5
SAFETY INFORMATION 5
GENERAL SAFETY RULES 6
IMPORTANT SAFETY INSTRUCTIONS 7
SYMBOLS 8
KNOWING YOUR INVERTER GENERATOR 9
GENERATOR PREPARATION 12
GENERATOR OPERATION 16
MAINTENANCE 19
TROUBLESHOOTING 23
EXPLODED VIEW & PARTS LIST 25
WARRANTY 29

TECHNICAL DATA

2500W inverter generator	Model#HB5020
Engine type:	4 stroke, OHV, single cylinder with forced air-cooling system
Start type:	Manual
Phase:	Single
Rated wattage:	1900 W
Starting wattage:	2500 W
Rated voltage:	120 V
Rated current:	15.8 A
Rated frequency:	60 Hz
Displacement:	80 cc
Run time at 50% load:	5.5 hour
Spark plug gap:	0.6-0.7 mm (0.024-0.028 in.)
Fuel tank capacity:	1.06 Gallon (4L)
Engine oil capacity:	12.3Fl.oz
USB output voltage:	5V
Noise rating:	59dB at 23 feet
Package dimensions(L x W x H):	21.3x13.4x20 inch
Net weight:	42.3 lb.

INTRODUCTION

Thank You for Purchasing a PowerSmart® Product. This manual provides information regarding the safe operation and maintenance of this product. Every effort has been made to ensure the accuracy of the information in this manual. PowerSmart® reserves the right to change this product and specifications at any time without prior notice.

Please keep this manual available to all users during the entire life of the generator. This manual contains special messages to bring attention to potential safety concerns, generator damage as well as helpful operating and servicing information. Please read all the information carefully to avoid injury and machine damage.

QUESTIONS? PROBLEMS?

Please contact our Customer Service Dept. with any questions and/or comments, either by Email: support@amerisuninc.com / support@powersmartusa.com, or Toll Free at (872)314-0005. We are available Mon-Fri 9am-5pm EST to help solve any issues that you might encounter.

NOTICE REGARDING EMISSIONS

Engines that are certified to comply with U.S. EPA emission regulations for SORE (Small Off Road Equipment), are certified to operate on regular unleaded gasoline, and may include the following emission control systems: (EM) Engine Modifications and (TWC) Three-Way Catalyst (if so equipped).

SAFETY INFORMATION

Before operating this generator, read and observe all warnings, cautions, and instructions on the generator and in this Owner's Manual.

NOTE: The following safety information is not meant to cover all possible conditions and situations that may occur. Read the entire Owner's Manual for safety and operating instructions. Failure to follow instructions and safety information could result in serious injury or death.

This safety alert symbol is used to identify safety information about hazards that can result in personal injury.

A signal word (DANGER, WARNING, or CAUTION) is used with the alert symbol to indicate the likelihood and the potential severity of injury. In addition, a hazard symbol may be used to represent the type of hazard.

DANGER Indicates a hazard, which, if not avoided, will result in death or serious injury.

WARNING Indicates a hazard, which, if not avoided, could result in death or serious injury.

CAUTION Indicates a hazard, which, if not avoided, might result in minor or moderate injury.

CAUTION when used without the alert symbol, indicates a situation that could result in damage to the engine or generator.

GENERAL SAFETY RULES

DANGER: CARBON MONOXIDE

Using a generator indoors CAN KILL YOU IN MINUTES. Generator exhaust contains carbon monoxide (CO). This is a poison gas you cannot see or smell. If you can smell the generator exhaust, you are breathing CO. But even if you cannot smell the exhaust, you could be breathing CO.

NEVER use a generator inside homes, garages, crawlspaces, or other partly enclosed areas. Deadly levels of carbon monoxide can build up in these areas. Using a fan or opening windows and doors does NOT supply enough fresh air. ONLY use a generator outside and far away from windows, doors, and vents. These openings can pull in generator exhaust.

Even if you use a generator correctly, CO may leak into the home. ALWAYS use a battery-powered or battery-backup CO alarm in the home. If you start to feel sick, dizzy, or weak after the generator has been running, move to fresh air RIGHT AWAY. See a doctor. You may have carbon monoxide poisoning.

WARNING: The exhaust from this product contains chemicals known to the State of California to cause cancer, birth defects, or other reproductive harm.

WARNING: This generator may emit highly flammable and explosive gasoline vapors, which can cause severe burns or even death if ignited. A nearby open flame can lead to explosion even if it isn't directly in contact with gasoline.

- Do not operate near open flame.
- Do not smoke near generator.
- Always operate on a firm, level surface.
- Always turn generator off before refueling. Allow generator to cool for at least 2 minutes before removing fuel cap. Loosen cap slowly to relieve pressure in tank.
- Do not overfill fuel tank. Gasoline may expand during operation. Do not fill to the top of the tank.
- Allow for expansion.
- Always check for spilled fuel before operating.
- Empty fuel tank before storing or transporting the generator.

WARNING: This generator produces powerful voltage, which can result in electrocution.

- ALWAYS ground the generator before using it (see the "Generating set ground" portion of the "GENERATOR PREPARATION" section).
- Generator should only be plugged into electrical devices, either directly or with an extension cord.
- NEVER connect to a building electrical system without a qualified electrician. Such connections must comply with local electrical laws and codes. Failure to comply can create a back-feed, which may result in serious injury or death to utility workers.
- Use a ground fault circuit interrupter (GFCI) in highly conductive areas such as metal decking or steel work. GFCIs are available in-line with some extension cords.
- Do not use in rainy conditions.
- Do not touch bare wires or receptacles (outlets).
- Do not allow children or non-qualified persons to operate.

WARNING: This generator produces heat when running. Temperatures near exhaust can exceed 150°F (65°C).

- Do not touch hot surfaces. Pay attention to warning labels on the generator identifying hot parts of the machine.

- Allow generator to cool down after use before touching engine or areas of the generator that become hot during use.

CAUTION: Misuse of this generator can damage it or shorten its life.

- Only use generator for its intended purposes.
- Operate only on dry, level surfaces.
- Allow generator to run for several minutes before connecting electrical devices.
- Shut off and disconnect any malfunctioning devices from generator.
- Do not exceed the wattage capacity of the generator by plugging in more electrical devices than the unit can handle.
- Do not turn on electrical devices until after they are connected to the generator. Turn off all connected electrical devices before stopping the generator.
- Turn the fuel tap to "OFF" position when the engine is not running.

IMPORTANT SAFETY INSTRUCTIONS

- Ensure that adequate ventilation is provided while the generator is in operation.
- The muffler is hot when the generator is running and just stopping. Be careful not to touch it.
- Under certain conditions, gasoline is extremely flammable and explosive.
- Be sure to add gasoline in a well-ventilated place. Turn off the engine and let it cool before filling.
- When refueling, keep away from the open fire.
- If there is oil spill while refueling, wipe the spilled gasoline immediately.
- Using should be prohibited in places with high fire risk.
- Do not connect the generator to the power system, or it may cause people to die from electric shock when they come into contact with the wire; damage the generator or damage the home appliance.
- A pre-operation check must be performed before starting the engine to avoid accidents or equipment damage.
- Generators must operate at least one meter away from the building and other equipment.
- Please put the generator on the horizontal ground. If the generator is tilted, it may cause gasoline overflow.
- Be sure to master how to quickly shut off generators and understand the operation of all control components.
- Children and pets must stay away from the operating area. While the engine is running, all personnel must be away from its rotating parts.
- If the operation is not proper, there is a potential danger to the generator. Do not operate the generator with a wet hand.
- Do not operate in the rain, snow, lest wet generator.
- Maintenance of generators to be operated by professionals.
- Generators vibrate in normal use. During and after the use of the generator, inspect both the generator as well as extension and power supply cords for damage resulting from vibration. Have damaged items repaired or replaced as necessary. Do not use plugs or cords that show signs of damage such as broken or cracked insulation.

For power outages, permanently installed stationary generators are better suited for providing backup power to the home. Even a properly connected portable generator can become overloaded. This may result in overheating or stressing of the components, possibly leading to a generator failure.

SYMBOLS

Some of the following symbols may be used on this product. Please study them and learn their meaning. Proper interpretation of these symbols will allow you to operate the product better and safer.

SYMBOL	NAME	DESIGNATION/EXPLANATION
V	Volts	Voltage
A	Amperes	Current
Hz	Hertz	Frequency (cycles per second)
W	Watts	Power
MIN	Minutes	Time
	Safety Alert	Precautions that involve your safety.
	Read the user's manual	To reduce the risk of injury, user must read and understand user's manual before using this product.
	Carbon monoxide hazard	Never operate the generator in an enclosed area. Engine exhause contains carbon monoxide. Only operate the generator outside and away from windows, doors and vents.
	Ground	Consult with local electrician to determine grounding requirements before operation.
	Clearance	Keep all objects at least 5 feet (1.5m) from generator. Heat from the muffler and exhaust gas can ignite combustible objects.
	Electric shock alert	Beware of electric shock hazard.
	Fire/Explosion	Fuel and its vapors are extremely flammable and explosive. Fire or explosion can cause severe burns or death. Keep generator at least 5 feet (1.5m) from all objects to prevent combustion.
	Wet conditions alert	Do not expose to rain or use in damp locations.
	Hot Surface	To reduce the risk of injury or damage, avoid contact with any hot surface.
	Open Flame Alert	Fuel and its vapors are extremely flammable and explosive. Keep fuel away from smoking, open flames, sparks, pilot lights, heat, and other ignition sources.

KNOWING YOUR INVERTER GENERATOR

Use the illustrations below to become familiar with the locations and functions of the various components and controls of this generator.

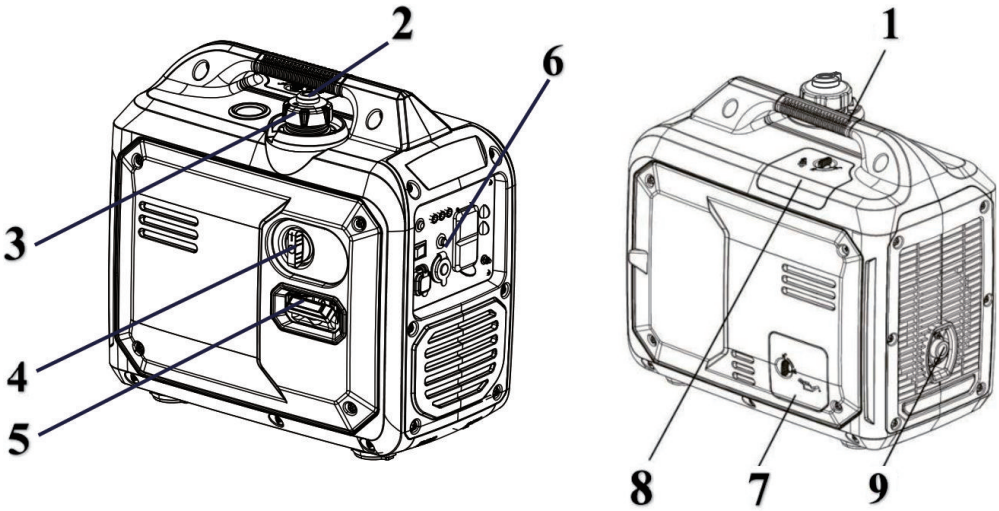

1	Carrying handle	4	Fuel tap	7	Air filter and oil maintenance cover
2	Tank cap switch	5	Recoil start handle	8	Spark plug maintenance cover
3	Fuel tank cap	6	Control panel	9	Muffler exhaust exit

Control Panel

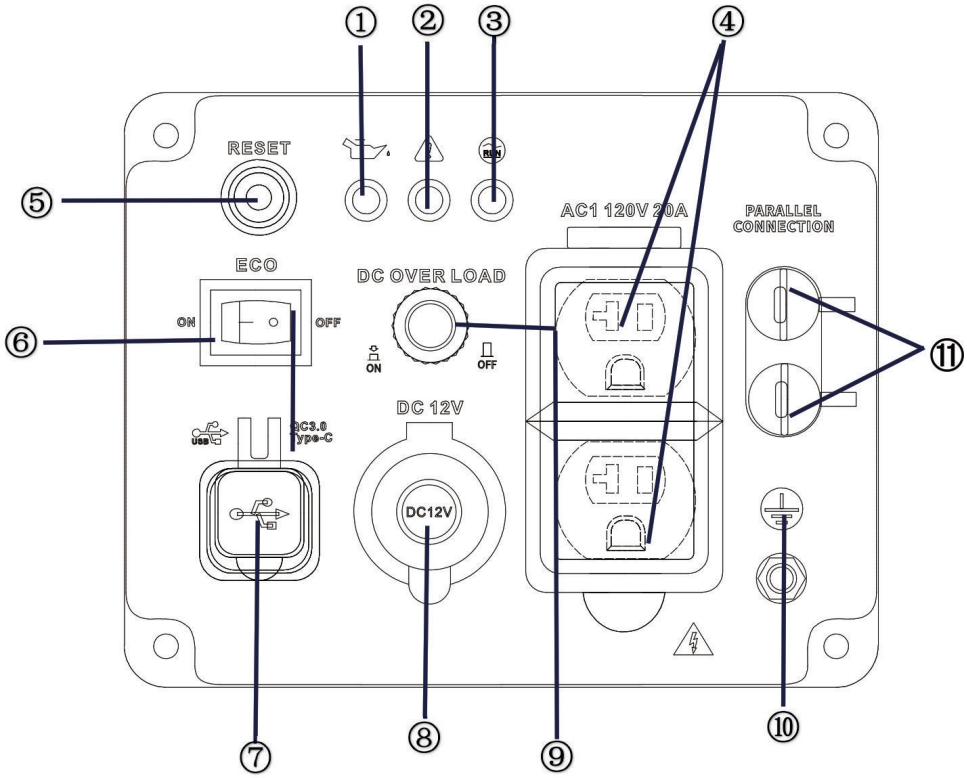

①	Oil warning light	⑤	AC reset	⑨	DC reset
②	Overload indicator light	⑥	ECO switch	⑩	Ground(earth)terminal
③	AC pilot light	⑦	USB port	⑪	Parallel kit terminal
④	AC output receptacle	⑧	12V DC port		

Oil Warning Light (Yellow)

The low oil level alarm system is designed to prevent engine damage due to insufficient oil in the crankcase. The low oil level alarm system automatically shuts down the engine before the engine oil in the crankshaft box is lowered to safety (the generator fuel tap remains “ON”).

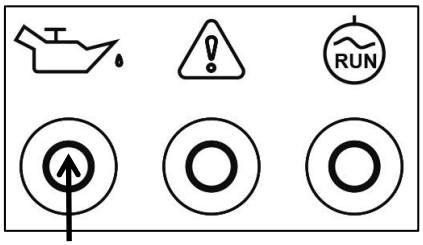

NOTE: After the low oil level alarm system shuts down the engine, if you start the engine again, the low oil alarm indicator (yellow) lights up and the engine cannot run. If this happens, please fill in the oil and then restart the generator.

Overload Indicator (Red)

When the overload indicatoris on, it indicates that the generating set is overload and then the AC protector works. It will stop the output of generating set to protect the electric equipment and the generating set itself. At this time, the overload indicator (red) will be on, but the engine is still in running state. We should disconnect the electrical equipment first.

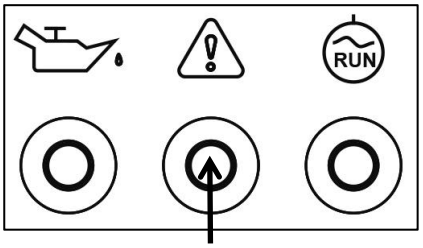

If the overload indicator (red) is extinguished and the operation indication (green) is on, reconnect the electrical equipment, otherwise shut down the engine and check for malfunction.

Running Indicator (Green)

The output indicator lights up when generating set starts and has normal output.

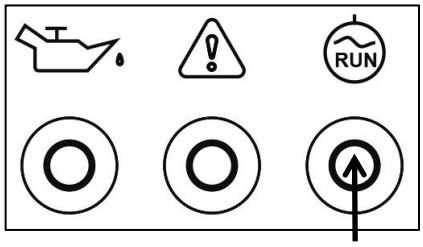

Reset Button

The reset button is used to restore output if an overload occurs. To restore output, reduce the loads and press the rest button.

Grounding Terminal

The grounding terminal is designed to prevent electric shock by connecting it to the grounding wire. The generating set must be properly grounded before operation.

ECO switch

When the energy-saving switch is in the energy-saving position, the generator is in the energy-saving state. When disconnecting or using low power, the engine automatically returns to a low speed state, thus reducing engine fuel consumption

Full speed

“full speed” means that the energy-saving state(ECO switch) is in OFF position and the engine is always at high speed, which is suitable for the situation where the load of electrical appliances varies greatly.
When the energy-saving switch is in full-speed position, the engine will remain in a high speed state.

- In order to reduce the change of voltage, the energy saving switch should be in the position of "full speed" when the electrical equipment needs a large instantaneous power, or when the generator is connected with the load of the high power apparatus at the same time.
- When using 12 V DC output, put the energy-saving switch in full-speed position.

WARNING: In the non-overload state, the output can not be restored by pressing the reset key. Each time the engine is started, the number of effective operation times of the protection cut-off switch is 5 times, or the engine needs to be restarted.

Fuel Tank Cap

Remove the fuel tank cap by rotating it anticlockwise to add fuel.

Parallel Operation

Make sure that the generating set is in a good running state before connecting it to other generating sets.
The total power of electric devices should not exceed rated power of generating set.
When electric motor starts, the overload indicator (red) will light up and normally it will stop within4 seconds. If it cannot stop, please call 1-872-314-0005 Mon-Fri 9-5 EST or email: support@powersmartusa.com & support@amerisuninc.com for customer service.

During parallel operation, energy-saving switches of generating sets should be in the same position. To parallel operation, perform the following steps:
1. Connect one generating set to other generating set(s) in parallel. Use the parallel kit to make the parallel connection (the parallel kit needs to be purchased separately).
2. Start the engine in proper order and make sure that the running indicator (green) is normal.
3. Connect the plug of electric devices to the AC receptacle of parallel kit.
4. Run the electric devices.

GENERATOR PREPARATION

The following section describes steps necessary to prepare the generator for use. If after reading this section, you are unsure about how to perform any of the steps please call (872) 314-0005 Mon-Fri 9-5 EST for customer service. Failure to perform these steps properly can damage the generator or shorten its lifespan.

Unpacking

Unpack the generator and all its parts. Do not discard the carton or any packaging until the generator is completely assembled.

Operating Location

- Only use OUTSIDE and place the generating set in a well-ventilated area.
- Only operate the generating set on a flat, level surface and in a clean, dry operating environment.
- Allow two feet clearance on all side of the generating set while operating it outdoors.
- Operate in specified area, if any problem on applicable occasion, please consult the authorized local dealers. In some areas, generating set must be registered with the local utility. Generating set used to construction sites may be subject to additional rules and regulations.

DANGER: The exhaust of the generating set contains carbon monoxide, using engine indoors CAN KILL YOU! NEVER use inside any building or any kind of enclosure, EVEN IF doors and windows are open. Place the generating set in a well-ventilated and clean area. Note the wind direction and air current when place the generating set.

High Altitude

This generating set may require a high altitude carburetor kit to ensure correct operation at high altitudes. Consult the authorized local dealer for high altitude kit information if you always operate your engine at altitudes above 5,000 feet (1,500 meters).

CAUTION: Even with carburetor modification, generating set horsepower will decrease about 3.5% for each 1,000 feet (300 meters) increase in altitude. The effect of altitude on horsepower will be greater than this if no carburetor modification is made.

Operation the engine at altitude below 5,000 feet (1,500 meters) with modified carburetor may cause the generating set to overheat and result in serious engine damage. Please restore factory specifications of the carburetor at the dealer when using the engine in a low altitude area.

Operating Condition

Check for loose or damaged parts, signs of oil or fuel leaks, and any other condition that may affect proper operation. Repair or replace all damaged or defective parts immediately.

Clean the dirt or foreign objects on the surface around exhaust and air intake of generator. DO NOT move or tip the generating set during operation. Use generating set only for intended uses. If you have questions about intended use, ask your local dealer.

Engine oil check

WARNING: This engine is not filed with oil before send out to the factory. User must add the proper amount of oil before operating the generator for the first time. Any attempt to crank or start the engine before it has been properly filled with the recommended type and amount of oil may result in

engine damage and void your warranty.

Engine Oil Recommendations
Only use 4-stroke engine oil of SJ,SL or equivalent level which are in accordance with or higher than API standard.
Check the API label on oil bottle or other container, and make sure the "SJ,SL" or equivalent level letter is in the label.
SAE 10W-30 is recommended for general, all-temperature use. Other viscosities shown in the chart may be used when the average temperature in your area is within the indicated range.

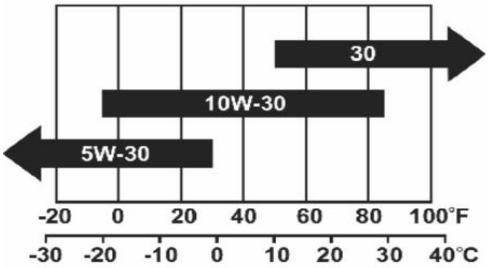

Ambient Temperature

Add the engine oil
1. Remove two screws of the appearance cover.
2. Unscrew and remove the dipstick.
3. Add recommended oil to the upper limit(H).
4. Fully tighten the dipstick.
5. Install the appearance cover and tighten the screws.

NOTE: The oil capacity (rated) of the engine crankcase is 12.3 fl. oz.
Properly dispose of any used oil at an approved waste management facility.

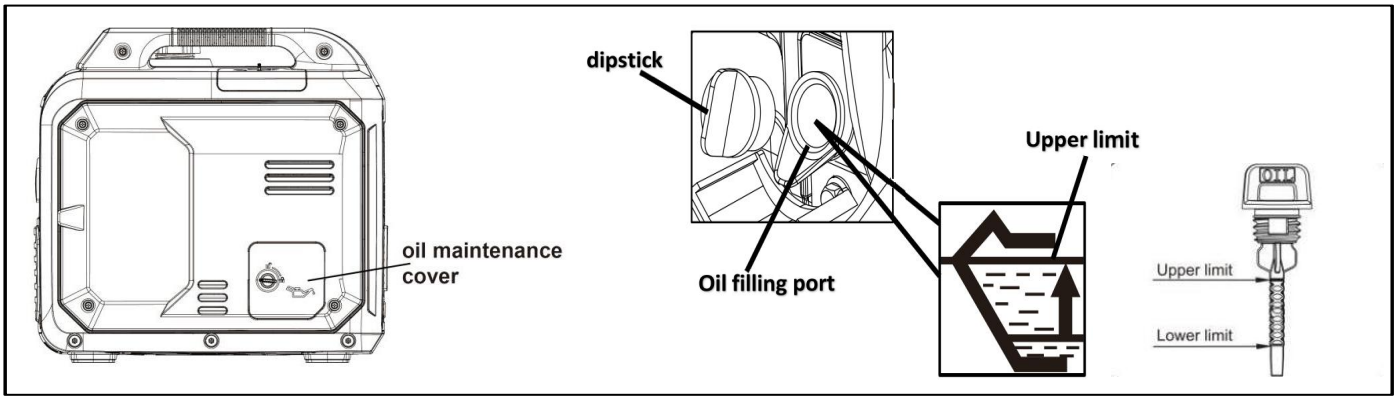

CAUTION: Operate generator only on a level surfaces.
Running the engine when the oil level is low can seriously damage the engine.
The engine is equipped with a low oil sensor (applicable types) that will automatic stop the engine when the oil level falls below the safe limit. To avoid the inconvenient of an unexpected shutdown, fill to the upper limit and check the oil level regularly.

Generator Fuel Check

WARNING: This generator may emit highly flammable and explosive gasoline vapors, which can cause severe burns or even death if ignited. A nearby open flame can lead to explosion even if not directly in contact with gasoline.

- With the engine stopped, check the fuel level. Refill the fuel tank if necessary.
- Use clean, fresh, regular unleaded gasoline with a minimum octane rating of 87.
- Do not mix oil with gasoline.
- Gasoline shall not overflow the tank (the oil level is lower than the red oil level indicator). After

refueling, tighten the tank cover and wipe up any spilled fuel. Prevent dirt and water from entering the tank.

- Do not use gasoline containing more than 10% ethanol or gasoline containing methanol, otherwise the engine will be seriously damaged.

To add gasoline, follow these steps:

1. Make sure the generator stopped and it is on a level surface.
2. Unscrew fuel cap and set aside.

NOTE: The fuel cap may be tight and hard to unscrew.

3. Slowly add unleaded gasoline to the fuel tank. Be sure not to fill above the upper limit mark. Always allow room for fuel expansion.
4. The capacity of the fuel tank is 1.06gallon(4L).

NOTE: Do not fill the fuel tank to the very top. Gasoline will expand and spill over during use even with the fuel cap in place.
Reinstall fuel cap and wipe clean any spilled gasoline with a dry cloth.

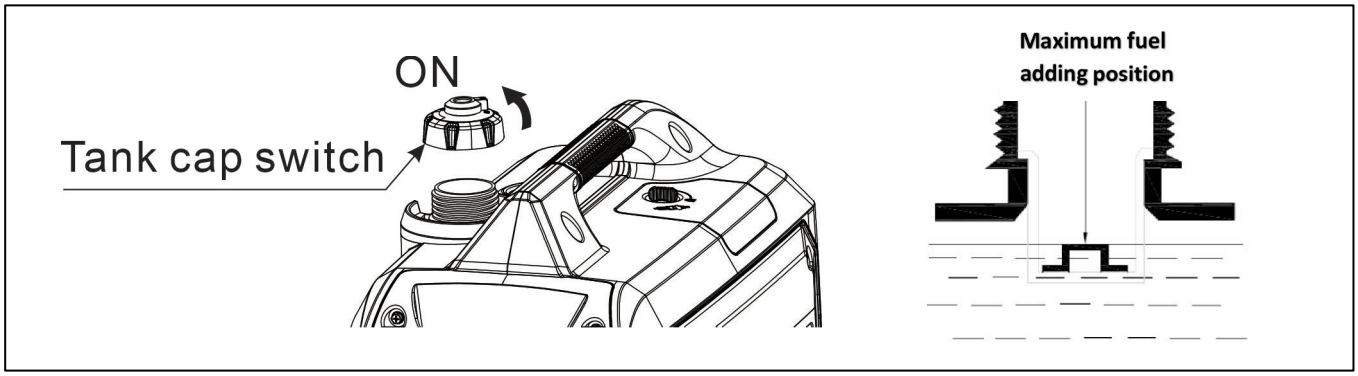

IMPORTANT:

- Do not fill tank indoors.
- Do not fill tank when the engine is running or hot.
- Never use an oil/gasoline mixture.
- Never use old gasoline.
- Avoid getting dirt or water into the fuel tank.
- Gasoline can age in the tank and make starting difficult. Never store generator for extended periods of time with fuel in the tank or the carburetor.
- Turn the fuel cock off and drain the fuel from the carburetor.
- Never use engine or carburetor cleaner products in the fuel tank or permanent damage may occur.
- It is important to prevent gum deposits from forming in essential fuel system parts, such as the carburetor, fuel filter, fuel hose or tank during storage. Also, experience indicates that alcohol-blended fuels (called gasohol, ethanol or methanol) can attract moisture, which leads to separation and formation of acids during storage.
- Acidic fuel can damage the fuel system of the generating set while in storage. Be sure to review the instruction given in “Storage” section.
- Gasoline/ Alcohol Blends: up to 10% alcohol, 90% unleaded gasoline by volume is approved as a fuel. Other gasoline/alcohol blends are not approved.
- Effects of old, stale or contaminated fuel are not warrantable.
- Allow the generating set to cool for at least two minutes before removing fuel cap when adding fuel.
- Loose the fuel cap slowly to relieve any pressure in the tank.

Generator Set Grounding

DANGER: Failure to properly ground the generator can result in electric shock.

The generator must be properly connected to an appropriate ground. It helps prevent electrical shock if a ground fault condition exists in the generating set or in connected electrical devices, especially when the unit is equipped with a wheel kit. Proper grounding also helps dissipate static electricity, which often builds up in underground devices.
A ground terminal has been provided on the generating set. For remote grounding, connect of a length of heavy gauge($4mm^2$ 12 AWG minimum) copper wire between the generating set ground terminal and a copper rod driven into the ground.

Local electrical codes may also require proper grounding of the unit. We strongly recommend that you consult with a qualified electrician for grounding requirements in your area.

Neutral Floating*
— Neutral circuit IS NOT electrically connected to **the engine crankcase**/ground of the inverter generator.
— The generator (stator winding) is isolated from **the engine crankcase** and from the AC receptacle ground pin.
— Electrical devices that require a grounded receptacle pin connection will not function if the receptacle ground pin is not functional.

Neutral Bonded to Frame*
— Neutral circuit IS electrically connected to the frame/ground of the generator.
— The generator system ground connects lower frame cross-member below the alternator. The system ground is connected to the AC neutral wire.

* See your model's control panel for specified type of grounding.

Electrical Devices

Disconnect all electrical devices from the generator and switch off the AC circuit breaker before start the engine.
The generator may be hard to start with electrical devices.
The connected electrical equipment must not exceed the maximum limit of the generator. Please refer to the specification table for details.

NOTE: After completing the above preparation, the generator is ready to be started.

GENERATOR OPERATION

Generator Start

- Disconnect the electrical equipment from the alternator's AC socket before starting the engine.
- For initial use (long unused, start after gasoline is used up), turn the fuel tap knob to "ON" position for 10 to 20 seconds before starting, so that gasoline can enter the engine carburetor.

1. Rotate the tank cap switch to “ON” position.

NOTE: When the generator is being transported, the oil tank cover switch should be cranked to “OFF” position.

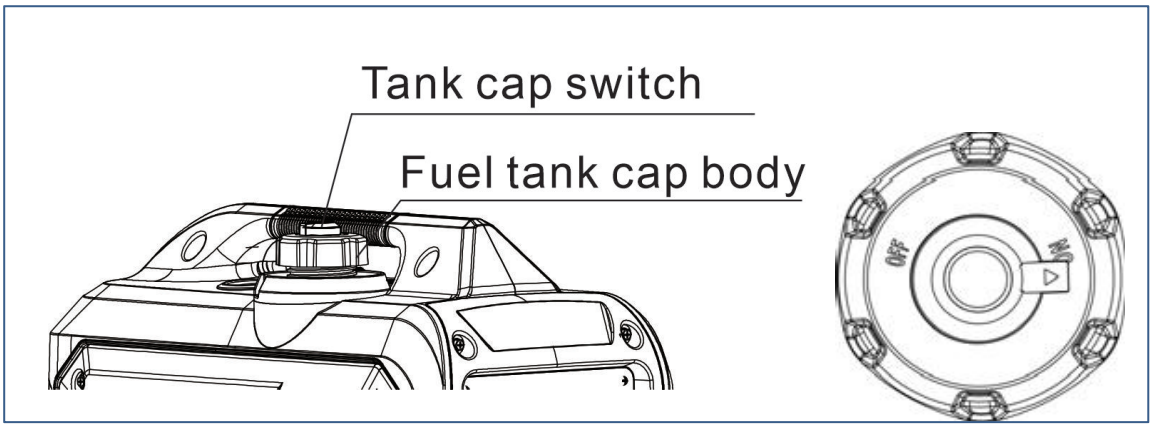

2. Turn the fuel tap knob to the "CHOKE" position.

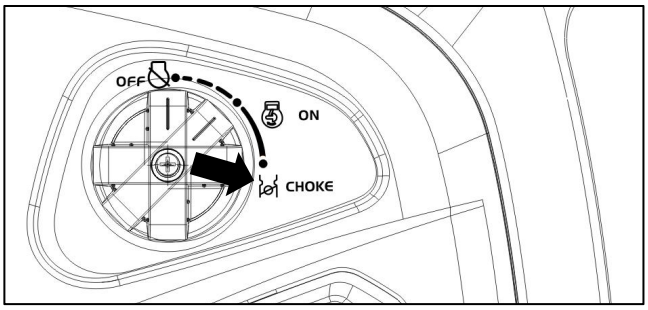

3. Grasp the recoil starter handle and pull slowly until resistance is felt, and then pull rapidly to avoid kickback. Firmly grasp the generator to avoid tumble of generator.

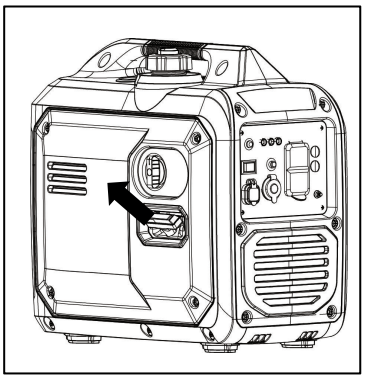

NOTE: Pay attention to pull the starting handle, the pull angle should not be too large, to prevent the handle from wearing the housing.
Do not allow the starting handle to rebound and retract automatically to avoid damage to the shell. Slowly put the starting handle back.

4. When the engine is running, wait about 5 second, then turn the fuel tap to the “ON” position.

5. After all above operations, the engine can be normally loaded.

WARNING: Check starter cord conditions before operating. Have it replaced immediately by local authorized dealer if cord is frayed.

WARNING: Do not connect device to the panel before generator start. The device should be in off position when it is connecting to the generator.

Using The Generator

WARNING: It is prohibited to start or close the generating set when the output terminal of generating set is connected to an electric device is in "ON" state.

Connect to electrical devices

- Inspect power cord for damage before using. There is a hazard of electrical shock from crushing, cutting or heat damage.
- Make sure that the generating set has been properly grounded. If the electric devices require grounding, the generating set must ground.
- Make sure that the electric devices are in "OFF" position.
- Allow the engine to stabilize and warm up for a few minutes after starting.
- Connect and start the electric devices.
- Turn off all electric devices and disconnect them from the generating set.
- If the generating set supplies for several loads or electric devices, start the smallest one first and the largest one last.

DANGER: If connected devices overheat, turn them off and disconnect them from generating set.

Electrical Shock

To reduce the risk of electrical shock, DO NOT use electrical cords that are worn, frayed, bare or otherwise damaged. DO NOT touch bare wires or receptacles. DO NOT handle generating set or electrical cords while standing in water, while barefoot, or while hands or feet are wet.

Loading Capacity

WARNING: Do not overload the generating set. Exceeding the generating set's capacity can damage the generating set and/or electric devices connected to it.

You must make sure your generating set can supply enough rated (running) and (starting) watts for the electrical devices at the same time. Follow these simple steps to calculate the running and starting watts necessary for your purposes.

1. Count the electrical devices you will power at the same time.
2. The amount of power you need to run with the devices is the total rated (running) watts of these items.
3. Starting power is the power needed shortly when electric devices start. Since not all devices start at the same time, starting power can be estimated by the maximum power of all devices plus the total power counted in step 2.

Electric equipment		Rate power(W)	Starting power(W)
Appliances	Tablet computer27"	80	100
	Energy saving lamb	5-50	5-50
	Electric cooker	1000	1000
	Computer	250	250
	Electric fan	50	100
	Washing machine	250	500
	Refrigerator	50	300
	Air-conditioner	1600	3200
Electric tooling	Electric hammer	1000	1500
	Impact Hammer	3000	6000
	Water pump	2200	5000
	Electric welding machine	5000	7500
	Air compressor	5000	10000

Wattage Reference Chart

WARNING: It is necessary to equip with circuit protector or switch to isolate the generating set from the electric utility when the generating set is mainly used for backup. Failure to isolate the generating set from the power utility may result in injury or death to electric utility workers and damage to the generating set due to back feed of electrical energy.

When using AC power, you can use DC power at the same time. If using both AC and DC output sockets, note that the total power does not exceed the sum of AC and DC power.

DC application

The output voltage of DC socket is 15-20 V, for 12V DC load only.

- When AC power is used, DC power supply can be used.
- Overload of DC may make DC over protector act. Firstly, remove the DC load, wait for a few minutes, and then reset the button of DC protector.

AC application

1. Start the engine, make sure the AC output light (green) is on.
2. Turn off the power supply switch and plug the device into the generator's output socket.

NOTE: In order to obtain the best operation effect and the maximum service life of the generator, the new generator should run for at least 20 hours under 50% load, so that the engine performance can be optimized.

Stop The Invert Generator

WARNING: Never stop the engine with electrical devices connected and with the connected devices in "ON" position.

1. Switch off the connected electrical appliances, and remove the connectors of all electric equipment from the generating set panel.

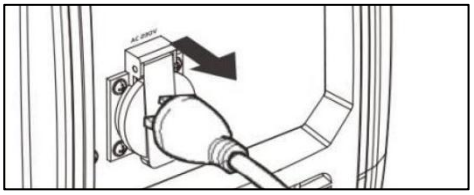

2. Turn the fuel tap to "OFF" position.

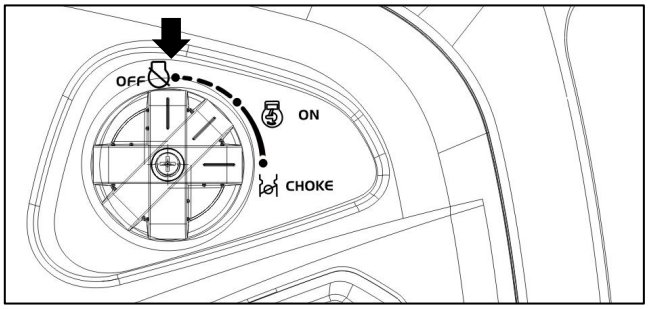

3. After the engine has cooled down completely, turn the fuel tank cap switch counterclockwise to the "OFF" position.

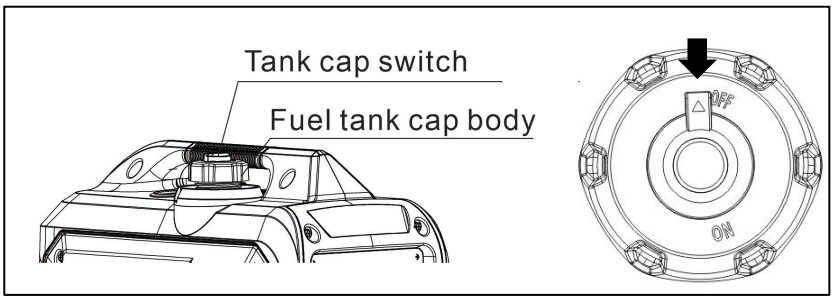

WARNING: Be sure the fuel tank cap switch and fuel tap locate the "OFF" position, when stopping, transporting and storing the generator.

MAINTENANCE

The purpose of maintenance and periodic maintenance is to keep the generator in the best operating condition.

WARNING: Improper maintenance or failure correct a problem before operation can cause a malfunction and result in property damage, serious injury or DEATH. lease use our original spare parts or the same quality parts when replacing damaged parts.Improper maintenance will void your warranty.

DANGER: Accidental starts can cause severe injury or death. Remove the spark plug cap and ground generating set before performing any service.

WARNING: The filter element may contains PAHs, PAHs are harmful for your health. Please wear gloves for protection during air filter maintenance.

Items \ Frequency		Each time	First 1 month or first 20hrs of operation	Thereafter, every 3 months or every 50hrs of operation	Every year or every 100 hrs of operation
Engine oil	Check-Refill	√			
	Replace		√	√	
Reduction gear oil(if equipped)	Oil level check	√			
	Replace		√	√	
Air filter element	Check	√			
	Clean		√		
	Replace			√	
Deposit Cup (if equipped)	Clean				√
Spark Plug	Check-adjust				√
	Replace	Every year or 250 hrs of operation			
Spark arrester	Clean			√	
Idling (if equipped)*	Check-adjust				√
Valve clearan -ce *	Check-adjust				√
Fuel tank & fuel filter *	Clean				√
Fuel line	Check	Every 2 years(change if necessary)			
Cylinder head, piston	Clean up carb -on *	<225cc, Every 125hrs ≧225cc, Every 250hrs			

* These items should be maintained and repaired by our authorized dealer, unless the owner has appropriate tools and is proficient with mechanical maintenance.

Maintenance Schedule

- If the gasoline engine frequently works under high temperature or heavy load, change the oil every 25 hours.
- If the engine frequently work under dusty or other severe circumstances, clean the air filter element

every 10 hours; If necessary, change the air filter element every 25 hours.

- If maintenance period and the exact time(hour), the one which comes first should govern.
- If you have missed the scheduled time to maintain your engine, do it as soon as possible.

Generator Maintenance

WARNING: Never clean the generator when it is running! Never use water to clean the generating set. Water can enter the generating set through the cooling slots and damage the generating set windings.

WARNING: Do not modify the generator in any way. Do not tamper with governed speed. Generator supplies correct rated frequency and voltage when running at factory set. Tampering with the factory set governor will void your warranty.

- Make certain that the generator is kept clean and stored properly.
- Use a dry cloth to clean exterior surfaces of the generating set. Use a soft brush to clean the dirt and oil.
- Use an air compressor (25 PSI) to clear dirt and debris from the generating set.
- Inspect all air vents and cooling slots to ensure that they are clean and unobstructed.

Changing the oil

WARNING: Change the oil when the engine is warm form operation. The oil can reach up to 140°Cunder that condition. Careful operation should be taken to prevent burns**.**

1. Place the machine on a level surface which is about 300mm high away from the ground.
2. Loosen the cover screw and remove the cover as shown in the right figure.
3. Place the waste oil box on the ground.
4. Remove the oil dipstick, and tilt the machine to pour the dirty oil as shown in the below figure.
5. Add recommended oil to the upper limit(H).
6. Fully tighten the dipstick.
7. Properly dispose of any used oil at an approved waste management facility.
8. Reinstall the oil maintenance cover.

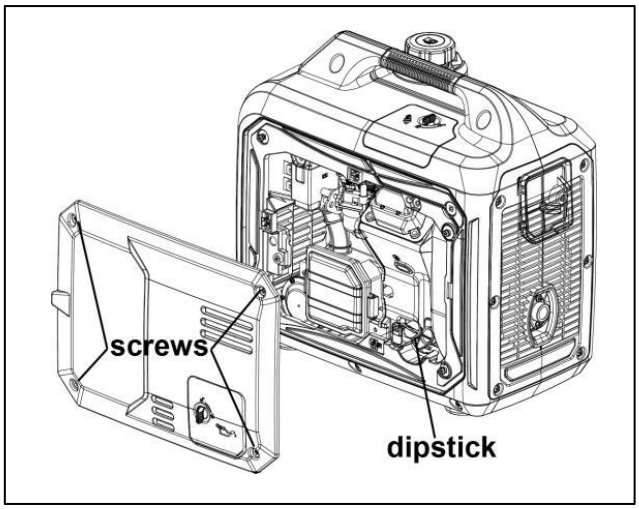

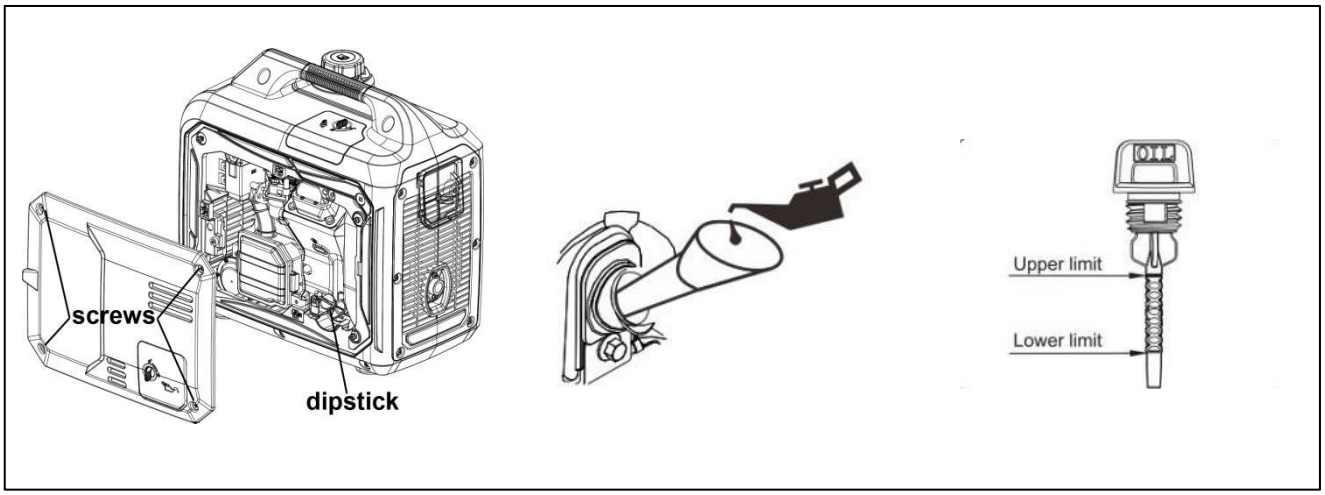

For conforming to the environment requirement, the used oil will be put into a sealed container and then be transported to the service station for recycle. Do not throw it into the trash or pour it on the ground.

Air Filter Maintenance

WARNING: Do not run the engine without the air filter, or serious danger can result.
A dirty Air Cleaner will restrict air flow into the carburetor. Please clean and maintain the air cleaner regularly to prevent carburetor from breaking down,If generators are often used in high dust areas, they need to be maintained more frequently.

1. Loosen the cover screw and remove the appearance cover.
2. Loose the filter fix clamp and remove the cover of the air filter.
3. Remove the foam filter element.
4. Wash in liquid detergent and warm water.
5. Squeeze thoroughly dry in a clean cloth.
6. Saturate in clean engine oil.
7. Squeeze in a clean absorbent cloth to remove all excess oil.
8. Assemble the filter element onto the filter unit.
9. Assemble the filter fix clamp.
10. Reinstall the air filter maintenance cover and the appearance cover.

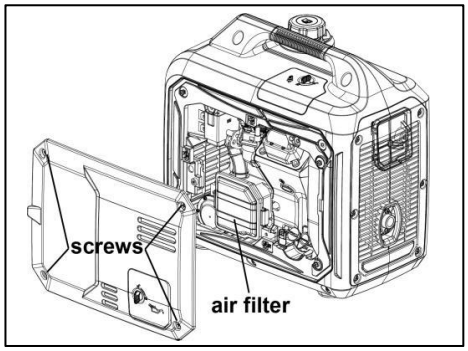

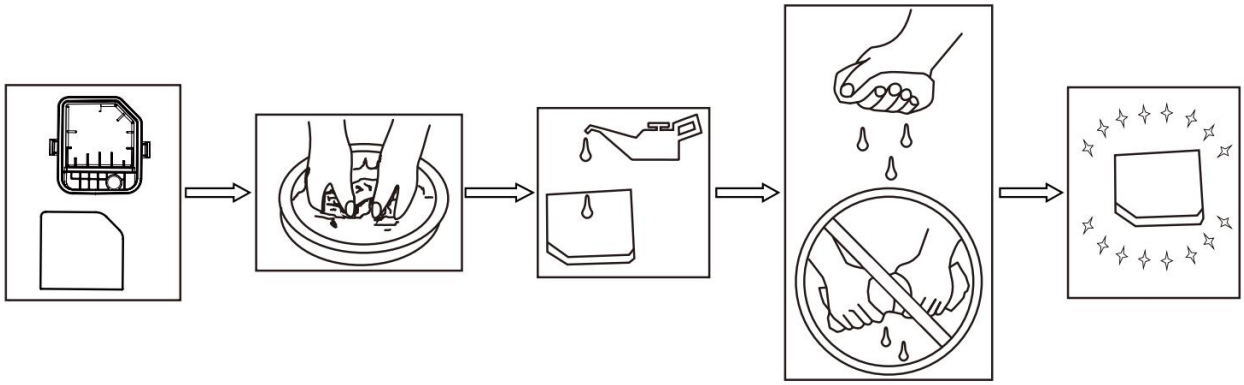

Spark Plug Maintenance

Spark plug gap : 0.6mm-0.7mm(0.024-0.028 in). Spark plug tighten torque: 12.5N.m

The spark plug is important for proper engine operation. A good spark plug should be intact, free of deposits, and properly gapped. Refer to Recommended Maintenance Schedule. To inspect the spark plug:

1. Remove the spark plug maintenance cover, and take off the spark plug cap
2. Using the spark plug spanner to loose and take off the spark plug.
3. Check the spark plug, if the spark plug insulator cracked or chipped, change a new one. Clean any dirt from the spark plug cap and spark plug base with wire brush if reuse it.
4. Measure the spark plug gap with a standard gauge. The normal value should be:0.6-0.7mm (0.024-0.028in), adjust if necessary.
5. Carefully thread the spark plug into the engine by hand.
6. After the spark plug is seated, use spark plug wrench to tighten the plug.
7. Attach the spark cap to the plug and connect the spark plug wire to the plug.

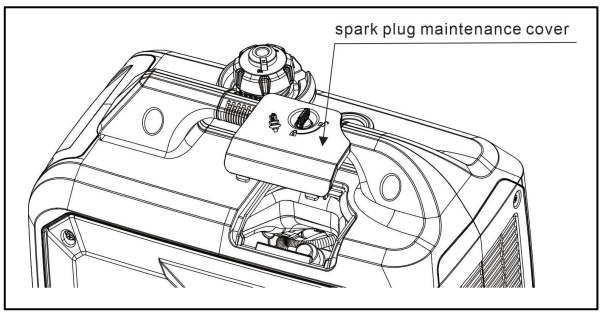

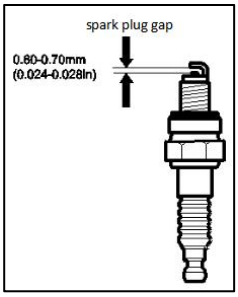

CAUTION: Only use recommended spark plug or equivalent. Do not use spark plugs that have improper heat range.

Spark Collector Maintenance

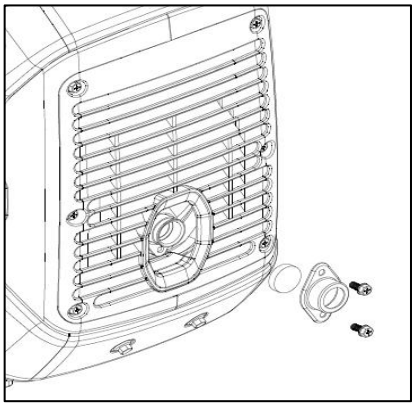

WARNING: The spark collector must be maintained for every 100 hours of engine operation.

1. When the muffler is cooled, loosen the screws from the muffler outlet and take off the spark collector.
2. Use a brush to clean the carbon deposits on the spark collector. If the spark collector is damaged, and replace it.
3. Re-install the spark collector.Fuel Tank Filter Maintenance.

Fuel Tank Filter Maintenance

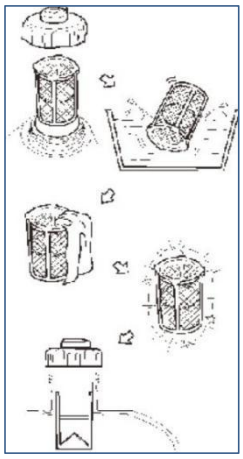

WARNING: Never use the gasoline while smoking or in the vicinity of an open flame.

1. Remove the fuel tank cap and filter.
2. Clean the filter with gasoline.
3. Wipe the filter and install it.
4. Install the fuel tank cap.

NOTE: Be sure the fuel tank cap is tightened securely.

Transport And Storage

WARNING: Gasoline is highly flammable and extremely explosive. Empty the fuel tank and shut off fuel valve before storing or transporting this generating set.

To prevent fuel spillage when transporting or during temporary storage, the generating set should be secured upright in its normal operating position, with the fuel tap OFF. The combination switch should be in the “stop” position and knob of the fuel cap should be turned to the “OFF” position.

When transporting

- Do not overfill the tank.
- Do not operate the generating set while it is on vehicle. Take the generating set off the vehicle and use it in a well-ventilated place. Avoid a place exposed to direct sunlight when putting the generating set on a vehicle. If the generating set is left in an enclosed vehicle for many hours, high temperature inside the vehicle could cause fuel to vaporize resulting in a possible explosion.
- The generator must not be transported a long time on rough road. If you have to drive on a road like this,drain off the gasoline and oil beforehand.

When storage for a long period

The generating set should be started at least once every 2 weeks and allowed to run for at least 20 minutes. Follow the instructions below for longer term storage if the generating set will be out of service for 2 months or more.

- Allow the generating set to cool completely before storage.
- Clean the generating set according to instruction in maintenance section.
- Drain all fuel completely from the fuel tank, fuel hose and carburetor to prevent gum from forming.
- Turn off the fuel supply at the fuel valve.
- Change the oil.
- Reattach the spark plug.
- Remove the spark plug and pour about 15ml of oil into the cylinder.Crank the engine slowly to distribute the oil and lubricate the cylinder.
- Store the unit in a clean, dry area out of direct sunlight.

TROUBLESHOOTING

Failure	Trouble	Solution
Generating set fails to start	engine switch is in **"OFF"** position.	Turn engine switch to the **"RUN"** position.
	Lack of fuel.	Fill fuel tank per instructions in this manual.
	Lack of engine oil.	Check oil level. This engine is equipped with a low oil sensor. The engine cannot be started unless the oil level is above the prescribed lower limit.
	No ignition.	Remove the spark plug cap. Clean any dirt around the plug base, and then remove the spark plug. Install the spark plug in the plug cap. Turn the engine switch to **"RUN"** position. Grounding the electrode to any engine ground, pull the recoil starter to see if sparks jump across the gap. If there is no spark, replace the plug.
		Reinstall the plug and start engine according to instructions in this manual.
		Consult Customer Service if necessary.
	Spark plug is splashed by fuel	Remove the spark plug and wipe the fuel.
	The generating set flames out after running for a certain time.	Turn the ventilation knob on the fuel tank cap to "ON" position;
		Check the fuel and oil level. Add them if necessary.
Generating set has no output	Breaker trip	Reset circuit breakers.
	Inadequate cord sets or extension cords.	Check cord sets or extension cords capabilities in section controls; cable size in this manual.
		Consult Customer Service if necessary.

WIRING DIAGRAM

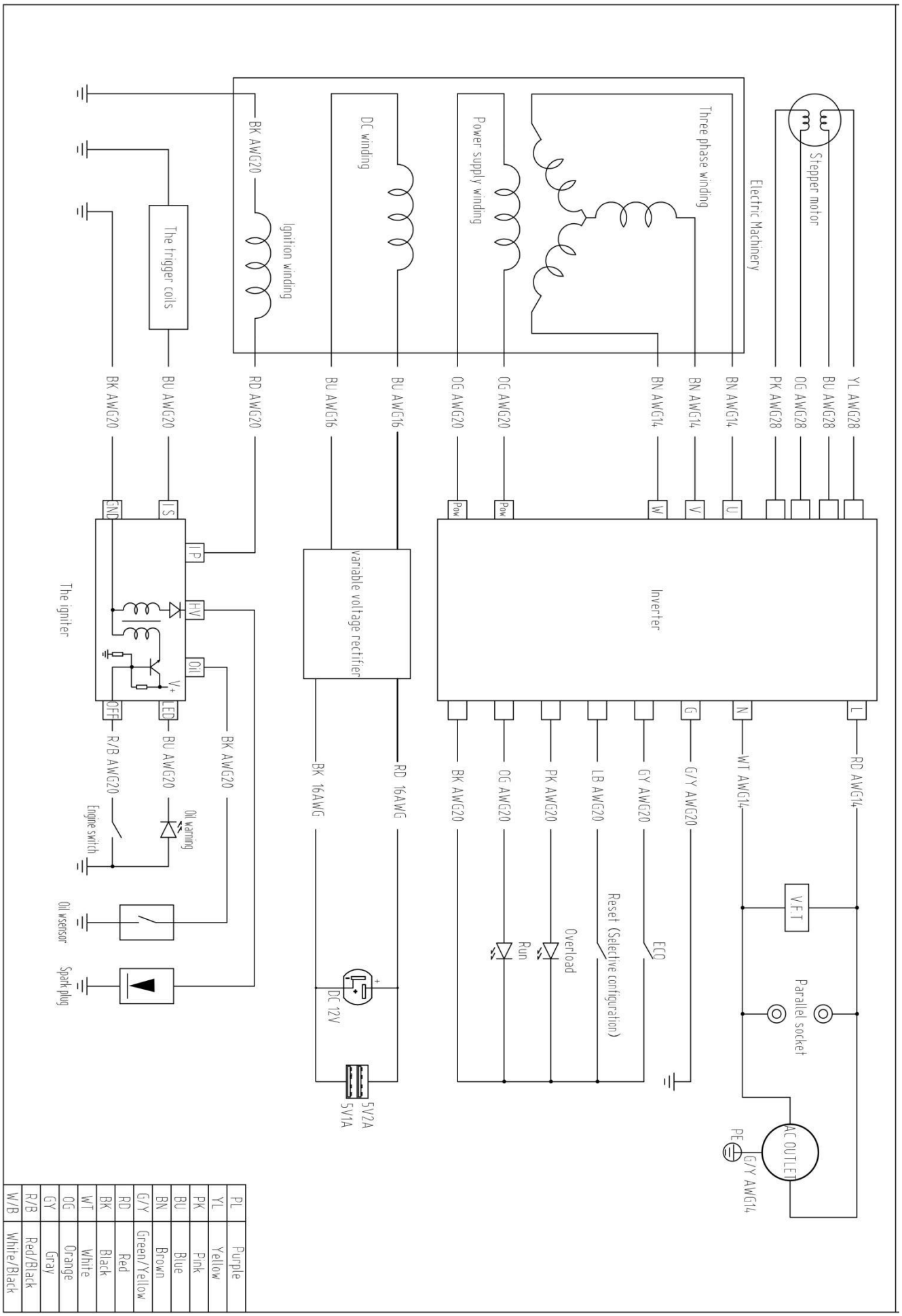

PL	Purple
YL	Yellow
PK	Pink
BU	Blue
BN	Brown
G/Y	Green/Yellow
RD	Red
BK	Black
WT	White
OG	Orange
GY	Gray
R/B	Red/Black
W/B	White/Black

EXPLODED VIEW & PARTS LIST

Generator Exploded View

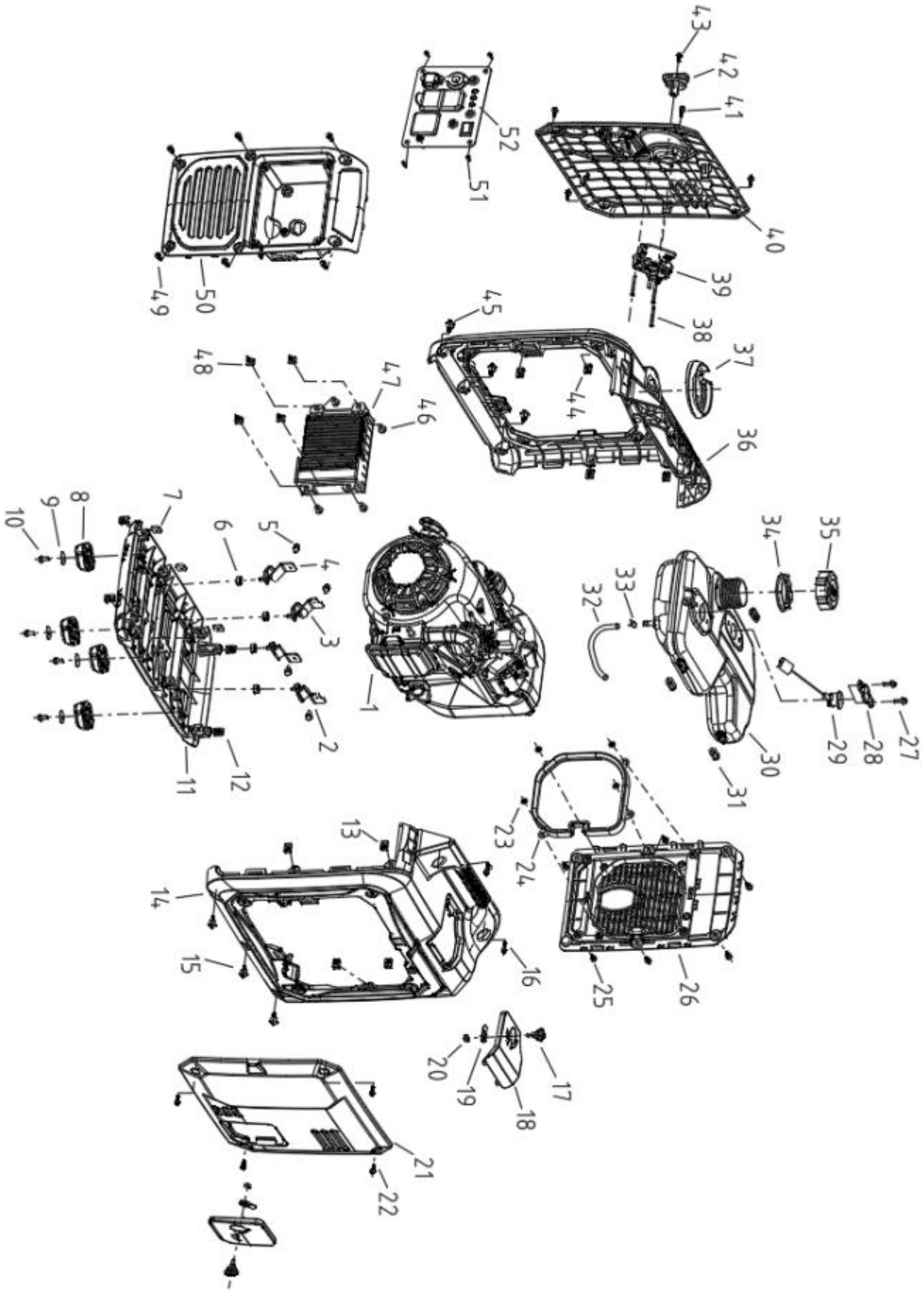

Generator Part List

Item	Stock #	Description	Qty
1	H80i-TJDB000	Engine	1
2	41120-G650501-00000	Right shock-absorbing pad assembly	1
3	41110-G650501-00000	Left shock.absorbing pad assembly	1
4	41110-G290011-00000	Left shock.absorbing pad assembly	2
5	91101-0612-00100	Hexagon flange bolt - Small series	4
6	92201-0600-00100	Hexagon flange nut	4
7	92318-G290503-00000	Square nut	6
8	41130-G65C502-00000	Frame shock-absorbing seat assembly	4
9	93104-0618-00100	flat washer	4
10	91101-0612-00100	Hexagon flange bolt - Small series	4
11	41410-G80B000-H0400	Base plate assembly	1
12	92319-G290502-00000	Clip-on nut	4
13	92319-G290502-00000	Clip-on nut	4
14	41430-G80D000-H0400	Right housing assembly	1
15	91705-G290505-00000	Hexagon step bolt	3
16	91705-G290506-00000	Hexagon step bolt	2
17	41440-G290022-H0400	Knob assembly	2
18	41403-G80B001-H0400	spark plug maintenance cover	2
19	41450-G290011-H0400	Baffle plate assembly	2
20	92110-0500-00200	Nylon hexagon lock nut	2
21	41431-G80D000-C0100	Right cover plate	1
21-1	41403-G80D000-C0100	oil maintenance cover	1
22	91705-G290504-00000	Hexagon step bolt	4
23	93208-G290502-00000	Retaining ring for bearing clip	4
24	23018-G650502-00000	Air shroud, Muffler	1
25	91705-G290506-00000	Hexagon step bolt	6
26	23019-G80B000-H0400	shield assembly.Muffler	1

Item	Stock #	Description	Qty
27	91101-0610-00100	Hexagon flange bolt - Small series	2
28	25214-G80B000-00000	Gauge cover	1
29	25210-G290021-00000	Gauge assembly	1
30	25140-G80B000-H0400	Fuel tank	1
31	25108-G290011-00000	Fuel Tank Support Sleeve	4
32	25130-G290021-000I0	Fuel Line	1
33	95206-G290502-00000	Clamp	3
34	25109-G290011-H0400	Fixed nut, Fuel tank	1
35	25110-G290011-H0400	Fuel tank cap assembly	1
36	41420-G80D000-H0400	left housing assembly	1
37	26233-G650502-00000	Rubber sleeve, Filling port	1
38	91206-4245-00200	Cross-groove disc head self-tapping screw	3
39	31430-G290506-00000	Starting switch assembly	1
40	41421-G80D000-C0100	left cover plate	1
41	91705-G290504-00000	Hexagon step bolt	4
42	41440-G290021-H0400	knob assembly	1
43	91202-0416-00200	Cross recessed pan head screw	1
44	92319-G290502-00000	Clip-on nut	1
45	91705-G290505-00000	Hexagon step bolt	3
46	91107-0516-00100	Hexagon flange bolt . Heavy series.Grade B	6
47	36300-G80A000-00000	inverter	1
48	92319-G80A000	Clip-on nut	6
49	91705-G290506-00000	Hexagon step bolt	6
50	36103-G80B000-H0400	Panel holder assembly	1
51	91202-0510-00200	Cross recessed pan head screw	4
52	36120-G80DXXX-RXXXX	control panel	1

Engine Exploded View

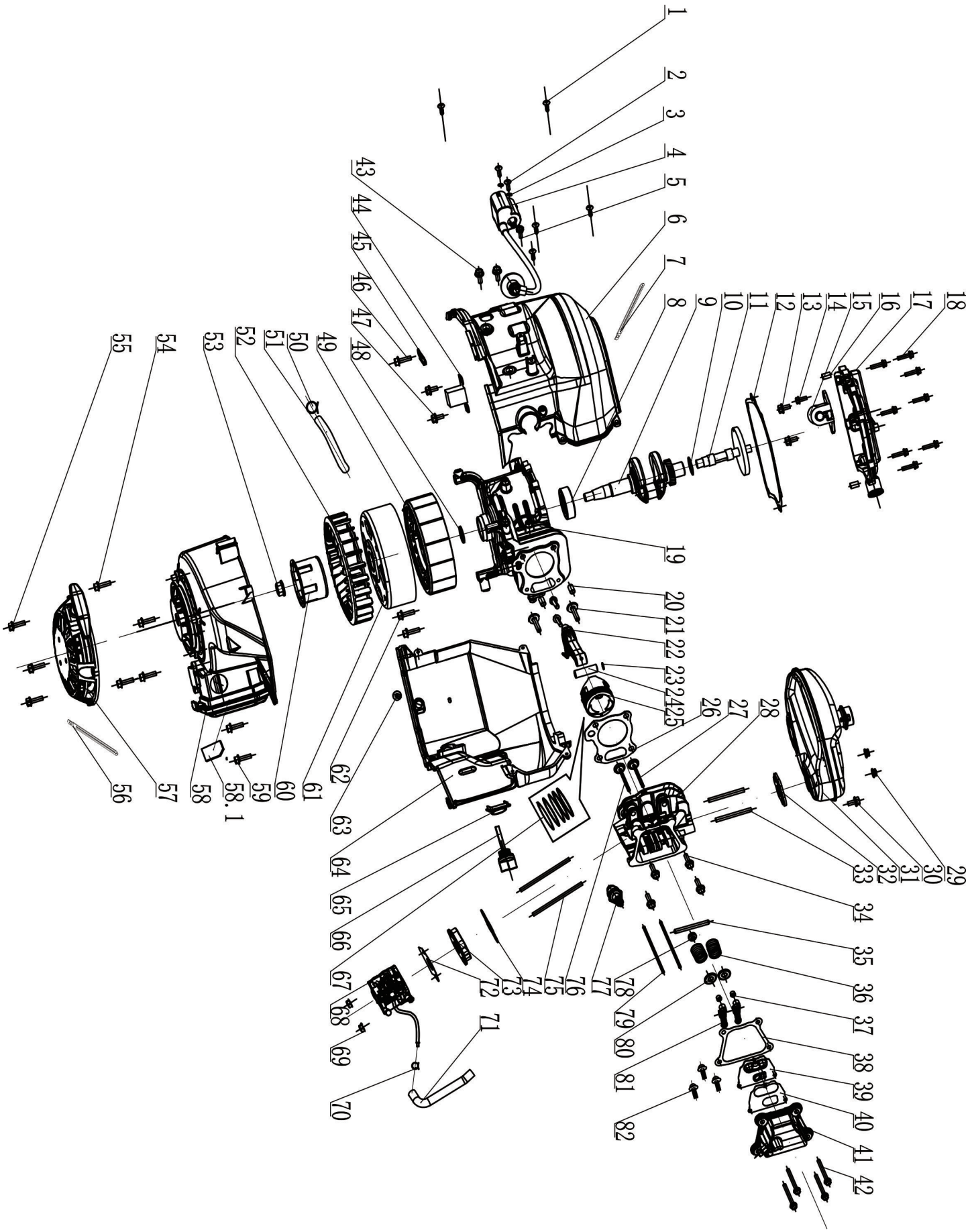

Engine Part List

Item	Stock#	Description	Qty
1	91206-4816-00100	Cross recessed pan head tapping screw	5
2	91206-4816-00100	Cross recessed pan head tapping screw	2
3	93104-0513-00500	Plain washer - Product grade C	2
4	31300-E180518-00000	Ignition coil	1
5	91101-0612-00100	Hexagon flange bolt - Small series	1
6	26231-E180506-00000	Air shroud upper housing, Crankcase	1
7	91719-E040010-00000	Wire clamp	1
8	94100-6204-P6300	Deep groove bearing	1
9	15310-E180011-00000	Crankshaft assembly	1
10	93100-E01L010-00000	Washer	1
11	17210-E180011-00000	Camshaft assembly	1
12	13001-E180505-00000	Gasket, Crankcase	1
13	91101-0614-00100	Hexagon flange bolt - Small series	2
14	91101-0612-00100	Hexagon flange bolt - Small series - Reduced shank	1
15	31080-E300502-00000	Oil sensor assembly	1
16	93302-0812-00001	Aligning pin	2
17	13410-E180503-00000	Crankcase cover assembly	1
18	91101-0622-00100	Hexagon flange bolt - Small series	8
19	13310-E180509-00000	Crankcase assembly	1
20	93302-0812-00001	Aligning pin	2
21	17021-E180502-00000	Valve lifter	2
22	15010-E1800111-00000	Connecting rod assembly	1
23	15122-E180011-00000	Collar, Piston pin	2
24	15121-E180011-00000	Piston pin	1
25	15100-E180011-00000	Piston	1
26	11131-E180012-00000	Gasket,Cylinder head	1
27	11122-E180502-00000	Exhaust valve	1
28	11140-E180509-00000	Cylinder head assembly	1
29	92201-0600-00100	Hexagon flange nut	2
30	91107-0612-00100	Hexagon flange bolt - Heavy series - Grade B	1
31	23100-E180508-00000	Muffler	1
32	23001-E180011-00000	Gasket, Exhaust	1
33	91708-V020501-00000	Double end bolt (Exhaust)	2
34	91718-E180011-00000	Bolt, Cylinder head	4
35	17341-E180011-00000	Valve rocker arm shaft	1
36	11102-E180011-00000	Spring, Valve	2
37	11108-E180011-00000	Lock clamp, Valve	2
38	11401-E180011-00000	Gasket, Cylinder head cover	1
39	11431-E180011-00000	Cover, Breath groove	1
40	11432-E180021-00000	Gasket, Breath groove cover	1
41	11410-E180504-00000	Cylinder head cover assembly	1

Item	Stock#	Description	Qty
42	91101-0620-00100	Hexagon flange bolt - Small series	4
43	91101-0612-00100	Hexagon flange bolt - Small series	2
44	31340-E180504-00000	Trigger assembly	1
45	13316-E180011-00000	Wire pressing block	1
46	91101-0610-00100	Hexagon flange bolt - Small series	1
47	91101-0612-00100	Hexagon flange bolt - Small series	2
48	90001-E180041-00000	Oil seal	1
49	33310-G290505-00000	Magneto stator assembly	1
50	95206-G650502-00000	Clamp	1
51	22004-E180011-00000	Exhaust pipe	1
52	26201-E180011-00000	Cooling fan	1
53	92403-E070010-00000	Flywheel nut	1
54	91101-0620-00100	Hexagon flange bolt - Small series	4
55	91101-0614-00100	Hexagon flange bolt - Small series	3
56	91719-E040010-00000	Wire clamp	1
57	28110-E320506-00000	Recoil startor assembly	1
58	28140-E180507-00000	Air shroud housing assembly	1
59	22132-E180502-00000	Foam filter element	1
60	91101-0614-00100	Hexagon flange bolt - Small series	2
61	28001-E180011-00000	Starter cup	1
62	33330-G290502-00000	Magneto rotor assembly	1
63	91101-0630-00100	Hexagon flange bolt - Small series	2
64	91101-0612-00100	Hexagon flange bolt - Small series	1
65	26232-E180509-00000	Air shroud lower housing, Crankcase	1
66	26236-E180011-00000	Rubber sleeve, Engine oil port	1
67	19010-E180011-H0200	Oil dipstick assembly	1
68	15200-E180011-00000	Piston ring	1
69	25300-E180524-00000	Carburetor	1
70	92201-0600-00100	Hexagon flange nut	2
71	25132-E180502-00000	Fuel Line Clamp	1
72	25130-E180541-000I0	Fuel Line Casing	1
73	22007-E180011-00000	Gasket, Carburetor heat shield	1
74	22006-E180011-00000	Heat shield, Carburetor	1
75	22002-E180011-00000	Gasket, Air intake	1
76	91707-E180011-00000	Double end bolt (Intake)	2
77	11121-E180502-00000	Intake valve	1
78	31110-E180503-00000	Spark plug assembly	1
79	11101-E180011-H0100	Oil sheild	1
80	17010-E180502-00000	Valve push rod assembly	2
81	11105-E180502-P0100	Spring seat, Intake valve	2
82	17310-E180011-00000	Valve rocker arm assembly	2
83	91202-0308-00100	Cross recessed pan head screw	3

TWO (2) YEARS LIMITED WARRANTY

PowerSmart® is committed to building tools that are dependable for years. Our warranties are consistent with our commitment and dedication to quality.

TWO (2) YEARS LIMITED WARRANTY OF POWERSMART PRODUCTS FOR HOME USE.

PowerSmart ("Seller") warrants to the original purchaser only, that all PowerSmart consumer power tools will be free from defects in material or workmanship for a period of two (2) years from date of purchase. Ninety (90) days for all PowerSmart Products, if the tool is used for professional or commercial use.

SELLER'S SOLE OBLIGATION AND YOUR EXCLUSIVE REMEDY under this Two (2) Years Limited Warranty and, to the extent permitted by law, any warranty or condition implied by law, shall be the repair or replacement of parts, without charge, which are defective in material or workmanship and which have not been misused, carelessly handled, or misrepaired by persons other than Seller or Authorized Service Center. To make a claim under this Limited Warranty, you must return the entire power tool product; transportation prepaid, to PowerSmart Include a legible copy of the original receipt, which lists the date of purchase (month and year) and the name of the company purchased from.

THIS LIMITED WARRANTY DOES NOT APPLY TO ANY ACCESSORY ITEMS INCLUDED WITH THE TOOL SUCH AS CIRCULAR SAW BLADES OTHER RELATED ITEMS OR TO ANY REPLACEMENT PARTS LISTED UNDER MAINTENANCE.

ANY IMPLIED WARRANTIES SHALL BE LIMITED IN DURATION TO TWO (2) YEARS FROM DATE OF PURCHASE. SOME STATES IN THE U.S. AND SOME CANADIAN PROVINCES DO NOT ALLOW LIMITATIONS ON HOW LONG AN IMPLIED WARRANTY LASTS, SO THE ABOVE LIMITATION MAY NOT APPLY TO YOU.

IN NO EVENT SHALL SELLER BE LIABLE FOR ANY INCIDENTAL OR CONSEQUENTIAL DAMAGES (INCLUDING BUT NOT LIMITED TO LIABILITY FOR LOSS OF PROFITS) ARISING FROM THE SALE OR USE OF THIS PRODUCT. SOME STATES IN THE U.S. AND SOME CANADIAN PROVINCES DO NOT ALLOW THE EXCLUSION OR LIMITATION OF INCIDENTAL OR CONSEQUENTIAL DAMAGES, SO THE ABOVE LIMITATION OR EXCLUSION MAY NOT APPLY TO YOU.

THIS LIMITED WARRANTY GIVES YOU SPECIFIC LEGAL RIGHTS, AND YOU MAY ALSO HAVE OTHER RIGHTS WHICH VARY FROM STATE TO STATE IN THE U.S., PROVINCE TO PROVINCE IN CANADA AND FROM COUNTRY TO COUNTRY.

For questions / comments, technical assistance or repair parts –
Please call toll free at: 1-872-314-0005 (M-F 9am – 5pm EST)
Email: support@amerisuninc.com / support@powersmartusa.com

SAVE YOUR RECEIPTS. THIS WARRANTY IS VOID WITHOUT THEM.