MAXPEEDINGRODS

USER MANUAL



FOR MODEL:

MXR5500

Digital Inverter Generator

5000 Running Watts | 5500 Peak Watts

DISCLAIMERS:
All information, illustrations and specifications in this manual are based on the latest information available at the time of publishing. The illustrations used in this manual are intended as representative reference views only. Moreover, because of our continuous product improvement policy, we may modify information, illustrations and/or specifications to explain and/or exemplify a product, service or maintenance improvement. We reserve the right to make any change at any time without notice. Some images may vary depending upon which model is shown.

ALL RIGHTS RESERVED:
No part of this publication may be reproduced or used in any form by any means - graphic, electronic or mechanical, including photocopying, recording, taping or information storage and retrieval systems - without the written permission of Chongqing Guoyu Technology Co., Ltd

⚠ DANGER

This manual contains important instructions for operating this inverter generator. For your safety and the safety of others, be sure to read this manual thoroughly before operating the generator. Failure to properly follow all instructions and precautions can cause you and others to be seriously hurt or killed.

TECHNICAL SPECIFICATIONS

Model Number	Running Watts	Peak Watts	Fuel Tank Size (L)	Rated Speed (RPM)	Ignition Type	Spark Plug	Engine Disp(cc)	Stroke X Bore	Oil Capacity (L)	Oil Type
MXR5500	5000	5500	13.5	3600	CDI	F7RTC F6RTC	312	80X62	0.8	10W30



LIMITED WARRANTY

1. **DURATION:** Maxpeedingrods warrants all the inverter generators against defects in workmanship under normal use for a period of 2 years from the date of retail purchase by the original end-user purchaser ("Warranty Period"), and free lifetime technical support and customer service.If a product is used for business,commercial, or industrial applications, the warranty period will be limited to ninety (90) days from the date of purchase.
2. **WHO GIVES THIS WARRANTY (WARRANTOR):**
   Chongqing Guoyu Technology Co., Ltd
3. **WHO RECEIVES THIS WARRANTY(PURCHASER):**
   The original purchaser (other than for purposes of resale) of the MAXPEEDINGRODS inverter.
4. **WHAT PRODUCTS ARE COVERED BY THIS WARRANTY:**
   Any portable generator supplied or manufactured by Warrantor.
5. **WHAT IS COVERED UNDER THIS WARRANTY:**
   Substantial defects on material and workmanship which occur within the duration of the warranty period.
6. **WHAT IS NOT COVERED UNDER THIS WARRANTY:**
   A. Transportation changes for sending the product to Warrantor or its authorized service representative for warranty service, or for shipping repaired or replacement products back to the customer; these charges must be borne by the customer.
   B. Damages caused by abuse, accident, shipping, misuse, overloading, modification, and the effects of corrosion, erosion and normal wear and tear.
   C. Warranty is voided if the customer fails to install, maintain and operate the product in accordance with the instructions and recommendations set forth in the owner's manual(s), or if the product is used as rental equipment.
   D. Pre-delivery service, i.e. assembly, oil or lubricants, and adjustment.
   E. Items or service that are normally required to maintain the product, i.e. lubricants and filters.
   F. Warrantor will not pay for repairs or adjustments to the product, or for any costs or labour, performed without Warrantor's prior authorization.
   EXCLUSIONS AND LIMITATIONS: Warrantor makes no other warranty of any kind, express or implied. Implied warranties, including warranties of merchantability and of fitness for a particular purpose, are hereby disclaimed. This warranty service described above is the exclusive remedy under this warranty; liability for incidental and consequential damages is excluded to the extent permitted by law.
7. **RESPONSIBILITIES OF PURCHASER UNDER THIS WARRANTY:**
   A. The purchaser must provide dated proof of purchase and must notify Warrantor within the warranty period.
   B. Deliver or ship the serviced generator or component to the nearest Warrantor's authorized service representative. Freight costs, if any, must be borne by the purchaser.

TABLE OF CONTENTS

TECHNICAL SPECIFICATIONS 2

LIMITED WARRANTY 3

SAFETY 5
- Safety Definitions 5
- Safety Symbol Definitions 5
- General Safety Rules 6
- Safety Labels and Decals 7

UNPACKING 7

FEATURES 8
- Basic Inverter Features MXR5500 8
- Control Panel Features MXR5500 9

OPERATION 10
- Before Starting the Inverter 10
  - Location Selection 10
  - Weather 10
  - Dry Surface 10
  - No Connected Loads 10
- Grounding the Inverters 10
- Powercord 11
- Inverter Paralleling Operation 11
- Initial Oil Fill 12
- Connect The Battery Line 12
- Adding/Checking Engine Fluids and Fuel . 13
- Checking and/or Adding Engine Oil 13
- Adding Gasoline to the Fuel Tank 13
- Starting MXR5500 14
- Stopping the Inverter 15
- Using Efficiency Mode 15
- Resetting the Reset Breaker 15

MAINTENANCE 16
- Maintenance Schedule 16
- Engine Oil Maintenance 17
- Checking Engine Oil 17
- Adding Engine Oil 17
- Changing Engine Oil 18
- Air Filter Maintenance 18
- Cleaning the Air Filter 18
- Draining the Float Bowl 19
- Spark Plug Maintenance 20
- Cleaning the Spark Arrestor 21
- Cleaning the Inverter 21
- Storage 21

TROUBLESHOOTING 22

SCHEMATIC 23
- MXR5500 Schematic 23

SAFETY

SAFETY DEFINITIONS

The words DANGER, WARNING, CAUTION and NOTICE are used throughout this manual to highlight important information. Be certain that the meanings of these alerts are known to all who work on or near the equipment.



This safety alert symbol appears with most safety statements. It means attention, become alert, your safety is involved! Please read and abide by the message that follows the safety alerts symbol.

⚠ DANGER

Indicates a hazardous situation which, if not avoided, will result in death or serious injury.

⚠ WARNING

Indicates a hazardous situation which, if not avoided, could result in death or serious injury.

⚠ CAUTION

Indicates a hazardous situation which, if not avoided, could result in minor or moderate injury.

NOTICE

Indicates a situation which can cause damage to the generator, personal property and/or the environment, or cause the equipment to operate improperly.

⚠ DANGER

Connection of the product to a building's electrical system is not applicable.

NOTE: Indicates a procedure, practice or condition that should be followed in order for the generator to function in the manner intended.

SAFETY SYMBOL DEFINITIONS

Symbol	Description
	Safety Alert Symbol
	Asphyxiation Hazard
	Burn Hazard
	Burst/Pressure Hazard
	Don't leave tools in the area
	Electrical Shock Hazard
	Explosion Hazard
	Fire Hazard
	Lifting Hazard
	Pinch-Point Hazard
	Read Manufacturer's Instructions
	Read Safety Messages Before Proceeding
	Wear Personal Protective Equipment (PPE)

SAFETY

GENERAL SAFETY RULES

⚠ DANGER



Never use the inverter in a location that is wet or damp. Never expose the inverter to rain, snow, water spray or standing water while in use. Protect the inverter from all hazardous weather conditions. Moisture or ice can cause a short circuit or other malfunction in the electrical circuit.



Never operate the inverter in an enclosed area. Engine exhaust contains carbon monoxide. Only operate the inverter outside and away from windows, doors and vents.

⚠ WARNING



Voltage produced by the inverter could result in death or serious injury.

- Never operate the inverter in rain or a flood plain unless proper precautions are taken to avoid being subject to rain or a flood.
- Never use worn or damaged extension cords.
- Always have a licensed electrician connect the inverter to the utility circuit.
- Never touch an operating inverter if the inverter is wet or if you have wet hands.
- Never operate the inverter in highly conductive areas such as around metal decking or steel works.
- Always use grounded extension cords. Always use three-wire or double-insulated power tools.
- Never touch live terminals or bare wires while the inverter is operating.
- Be sure the inverter is properly grounded before operating.

⚠ WARNING





Gasoline and gasoline vapors are extremely flammable and explosive under certain conditions.

- Always refuel the generator outdoors, in a well-ventilated area.
- Never remove the fuel cap with the engine running.
- Never refuel the inverter while the engine is running. Always turn engine off and allow the generator to cool before refueling.
- Only fill fuel tank with gasoline.
- Keep sparks, open flames or other form of ignition (such as match, cigarette, static electric source) away when refueling.
- Never overfill the fuel tank. Leave room for fuel to expand. Overfilling the fuel tank can result in a sudden overflow of gasoline and result in spilled gasoline coming in contact with HOT surfaces. Spilled fuel can ignite. If fuel is spilled on the inverter, wipe up any spills immediately. Dispose of rag properly. Allow area of spilled fuel to dry before operating the inverter.
- Wear eye protection while refueling.
- Never use gasoline as a cleaning agent.
- Store any containers containing gasoline in a well-ventilated area, away from any combustibles or source of ignition.
- Check for fuel leaks after refueling. Never operate the engine if a fuel leak is discovered.

⚠ WARNING



Never operate the inverter if powered items overheat, electrical output drops, there is sparking, flames or smoke coming from the inverter, or if the receptacles are damaged.



Never use the inverter to power medical support equipment.



Always remove any tools or other service equipment used during maintenance from the inverter before operating.

NOTICE

Never modify the inverter.

Never operate the inverter if it vibrates at high levels, if engine speed changes greatly or if the engine misfires often.

Always disconnect tools or appliances from the inverter before starting.

SAFETY

SAFETY LABELS AND DECALS MXR5500



1

⚠ WARNING

Operation of this equipment may create sparks that can start fires around dry vegetation.

2

⚠ WARNING

A hot exhaust system can cause serious burns. Avoid contact if the engine has been running.

3

MXR5500 MAXPEEDINGRODS CE Low-power generating set Serial number and Year of MFG: on crankcase

COP Power(kW):	5.0	COP Power Factor:	1
Max Power(kW):	5.5	Performance Class:	G1
Rated Voltage(V):	230	Quality Class:	Class A
Rated Current(A):	21.7	IP Class:	IP23M
Rated Frequency(Hz):	50	Net Weight(kg):	52
DC Output(A):	12V 8.3A	Standards:	ISO 8528-13

Chongqing Guoyu Technology Co.,Ltd Tuchang Town, Hechuan District, Chongqing, China

4

⚠ DANGER

Using a generator indoors CAN KILL YOU IN MINUTES. Generator exhaust contains carbon monoxide. This is a poison you cannot see or smell.

NEVER use inside a home or garage, EVEN IF doors and windows are open.

Only use OUTSIDE and far away from windows, doors, and vents.

5

AUTOMATIC SHUTOFF–YOU MUST:

MOVE GENERATOR TO AN OPEN, OUTDOOR AREA. POINT EXHAUST AWAY. DON'T RUN GENERATOR IN ENCLOSED AREAS (E.G. NOT IN HOUSE OR GARAGE).

MOVE TO FRESH AIR AND GET MEDICAL HELP IF SICK, DIZZY OR WEAK.

6

⚠ WARNING

- Read the operator's instruction manual; The new engine inside has no engine oil, before starting the generating set, be sure to fill the crankcase with specif ied engine oil.
- Check that there is not any fuel spilling or fuel leakage. Not to refuel when operating.
- Exhaust gas is poisonous; Do not operate in an unventilated area.(Carbon monoxide (CO) danger).
- Hot exhaust can burn you, Stay away if engine has been running.

MAINTENANCE

- Maintain this generator properly, Improper maintenance may cause issues starting the generator and even shorten the generator's life.
- Change the oil after the first 20 hours. It is recommended to change engine oil once a month minimum.
- Keep the fuel tank clean to ensure the carburetor is not blocked. Do not mix water and gasoline.
- Daily maintenance checks are essential for trouble free operation. For regular maintenance and service steps, refer to the operations manual.

⚠ CAUTION

UNPACKING

⚠ CAUTION

Always have assistance when lifting the inverter. The inverter is heavy; lifting it could cause bodily harm.

Avoid cutting on or near staples to prevent personal injury.

Tools required – box cutter or similar device.

1. Carefully cut the packing tape on top of the carton.
2. Remove socket wrench, funnel and save for later.
3. Carefully cut two sides of the carton to remove the inverter.

WHAT COMES IN THE BOX

Owner Manual (1)
Spark Plug Socket Wrench (1)
Oil Funnel (1)
Screwdriver (1)
Cigarette Lighter Plug (1)
EU Plug (2)
Generator Parallel Cables (1)
Generator Dust Cover (1)
Remote Controller (1)

FEATURES

BASIC INVERTER FEATURES MXR5500



1. **Fuel cap:** Open the fuel tank cap and fill with proper amount of gasoline.
2. **Control Panel:** Contains the reset breaker, outlets and warning lights.
3. **Recoil Handle Protective Cover:** Prevents pull cord wire from damaging inverter body.
4. **Recoil Handle:** Pull to start the engine.
5. **Fuel switch:** Turn on the fuel to start the generator, turn off the fuel to stop the generator.
6. **Engine Service Panel:** Remove the panel to access the engine for maintenance.
7. **Muffler and Spark Arrestor:** Avoid contact until the engine is cooled down. The spark arrestor prevents sparks from exiting the muffler. It must be removed for servicing.
8. **Engine Cooling Vents:** Helps move airflow in unit to regulate engine temperatures.

FEATURES

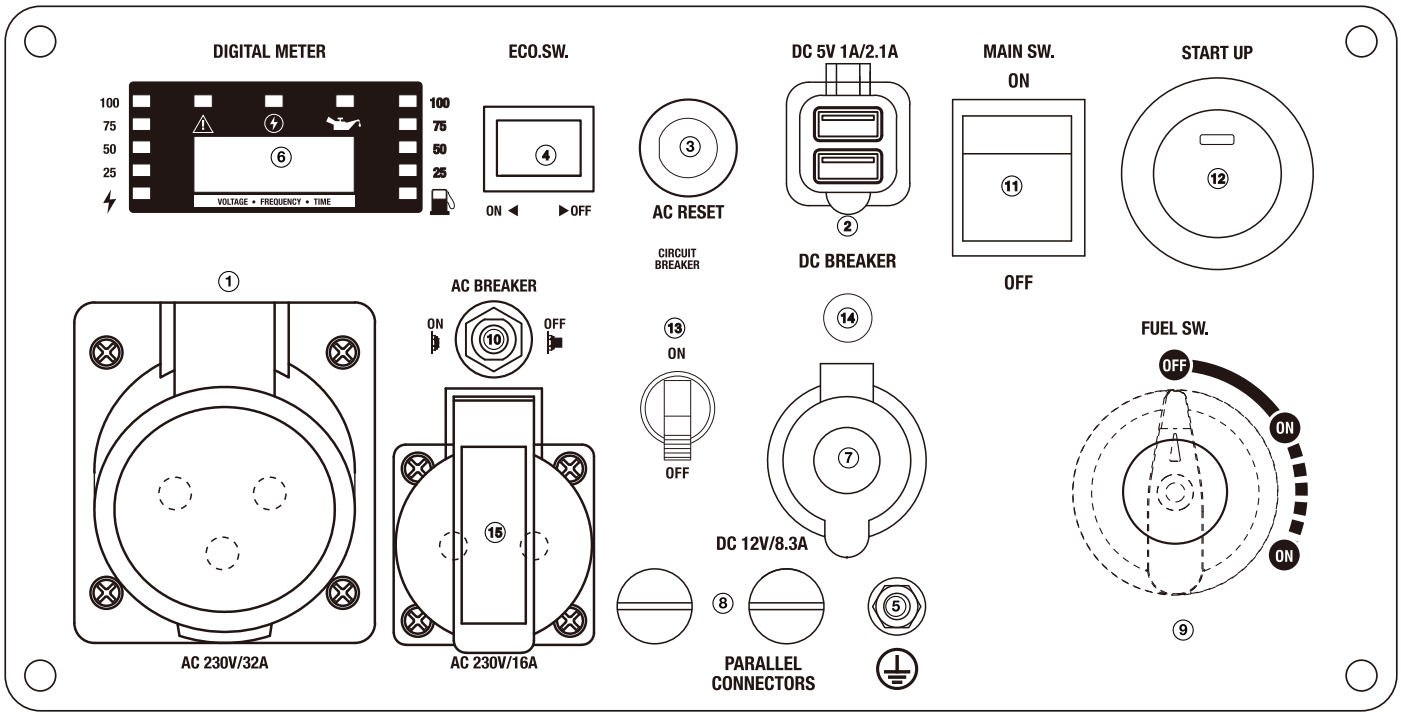

CONTROL PANEL FEATURES MXR5500

① **230-Volt, 32-amp EU Outlet:** The outlet is capable of carrying a maximum of 32 amps.

② **USB Duplex:** 5V DC that come in 1 amps and 2.1 amps.

③ **AC Reset:** If the inverter is overloaded, the reset breaker will trip. The engine will continue to run, but there will be no output from the inverter. Unplug the devices and reduce the load. Push in the reset breaker to reset it.

④ **Efficiency Mode Switch:** When turned to the ON position, the engine will sense the load needed and run at a slower RPM to save fuel.

⑤ **Ground Terminal:** The ground terminal is used to externally ground the inverter.

⑥ **Multifunction Digital Display Meter:** Yellow light means that the amount of oil is too low, red light means that the machine overload, green light means normal operation; Power display on the left, oil level display on the right; The display screen scrolls to display the output voltage, frequency, accumulative running time.

⑦ **DC Cigarette Lighter Outlet:** 12V DC 8.3A.

⑧ **Parallel Connectors:** To increase AC power output, the connector sockets are used to connect the two same type generator with special paralleling cords. The connector sockets is only used to the communication between the inverters, they can not used for AC power output. The special paralleling cords shall be purchase separately, and they shall be approved by certification body.

⑨ **Fuel Switch:** Fuel switch is OFF, and the engine will not run.

⑩ **AC Breaker:** If the inverter is overloaded, the AC breaker will trip to block current.

⑪ **Main SW:** Manage battery power and shutdown.

⑫ **One Push Start:** Press this button, the engine can start and stop.

⑬ **Circuit Breaker:** A circuit breaker interrupts the current when the whole circuit is overloaded. After the generator is started, confirm whether the circuit breaker is in the on position. If it is in the off position, push up the circuit breaker.If the circuit breaker is closed, there will be no voltage output from the AC socket.

⑭ **DC Breaker:** If the inverter is overloaded, the reset breaker will trip to block current.

⑮ **230-Volt, 16-amp EU Outlet**: The outlet is capable of carrying a maximum of 16 amps.

FEATURES

BEFORE STARTING THE INVERTER



BEFORE STARTING THE INVERTER, REVIEW SAFETY SECTION STARTING ON PAGE 5.

Location Selection – Before starting the inverter, avoid exhaust and location hazards by verifying:

- You have selected a location to operate the inverter that is outdoors and well ventilated.
- You have selected a location with a level and solid surface on which to place the inverter.
- You have selected a location that is at least 6 feet (1.8 m) away from any building, other equipment or combustible material.
- If the inverter is located close to a building, make sure it is not located near any windows, doors and/or vents.

⚠ DANGER

Using a generator indoors
CAN KILL YOU IN MINUTES.
Generator exhaust contains carbon monoxide.
This is a poison you cannot see or smell.



NEVER use inside a home or garage, **EVEN IF** doors and windows are open.

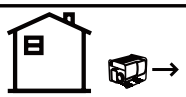

Only use **OUTSIDE** and far away from windows, doors, and vents.

Avoid other generator hazards.
READ MANUAL BEFORE USE.

⚠ WARNING



Always operate the inverter on a level surface. Placing the inverter on non level surfaces can cause the inverter to tip over, causing fuel and oil to spill. Spilled fuel can ignite if it comes in contact with an ignition source such as a very hot surface.

NOTICE

Only operate the inverter on a solid, level surface. Operating the inverter on a surface with loose material such as sand or grass clippings can cause debris to be ingested by the inverter that could:
• Block cooling vents
• Block air intake system

Weather – Never operate your inverter outdoors during rain, snow or any combination of weather conditions that could lead to moisture collecting on, in or around the generator.

Dry Surface – Always operate the inverter on a dry surface free of any moisture.

No Connected Loads – Make sure the inverter has no connected loads before starting it. To ensure there are no connected loads, unplug any electrical extension cords that are plugged into the control panel receptacles.

NOTICE

Starting the inverter with loads already applied to it could result in damage to any appliance being powered off the inverter during the brief start-up period.

Grounding the Inverters
Consult with your local municipalities for your grounding codes.

⚠ WARNING



Be sure the inverter is properly connected to earth ground before operating.

OPERATION

POWERCORD

Using Extension Cords

MAXPEEDINGRODS Portable Power assumes no responsibility for the content within this table. The use of this table is the responsibility of the user only. This table is intended for reference only. The results produced by using this table are not guaranteed to be correct or applicable in all situations as the type and construction of cords are highly variable. Always check with local regulations and a licensed electrician prior to installing or connecting an electrical appliance.

Extension Cord Wire Gauge Size

	LENGTH OF EXTENSION CORD (ft)								
AMPS	10	20	30	40	50	60	80	100	120
5	20	18	16	14	12	12	10	10	8
10	18	16	14	12	12	10	10	8	8
15	16	14	12	12	10	10	8	8	6
20	14	12	12	10	10	8	8	6	6
25	12	12	10	10	8	8	6	6	6
30	12	10	10	8	8	6	6	6	6
35	10	10	8	8	6	6	6	6	6

INVERTER PARALLELING OPERATION

⚠ DANGER



Never connect the paralleling cord to the inverters with the inverters running. The inverters must not be running and both the paralleling cord switches must be off when connecting the cords.

⚠ WARNING



Do not attempt to parallel the MAXPEEDINGRODS inverter with any other manufacturers' inverters. Do not use the paralleling cord for any application other than inverter paralleling. Do not use this cord on other manufacturers' inverters.



Always ensure that both ends of the paralleling cord are switched off before connecting the inverters.

INVERTER PARALLELING OPERATION

1. Using only the MAXPEEDINGRODS paralleling cord with both cord switches set to OFF (O), connect one male plug to one inverter and connect the remaining plug into the other inverter. Either of the receptacles on the inverters can be used.
2. Start one of the inverters and wait until the output ready light is on.
3. Turn both cord switches to ON (I).
4. Start the remaining inverter; wait until the output ready light is on before connecting the load.
5. When power is present, a light will illuminate in the three-prong plug that is plugged into the inverter.
6. To stop the inverters, unplug all connected loads, turn both cord switches to OFF (O) and unplug the cord on each inverter.
7. If during operation the inverters' output is stopped due to overloading, reduce the connected load by unplugging appliances, and then push the reset button and restart the inverter When the ready light is on, the load can be reconnected.

OPERATION

INITIAL OIL FILL

BEFORE ADDING ENGINE OIL, REVIEW SAFETY SECTION STARTING ON PAGE 5.

NOTICE

Engine oil must be added when the inverter is on a flat, level surface, or an inaccurate reading may result. Do not overfill. If the engine is overfilled with oil, it can cause serious engine damage.

1. Loosen the screw and remove the engine oil fill/drain plug service panel to access the oil fill/drain plug (see Figure 1)

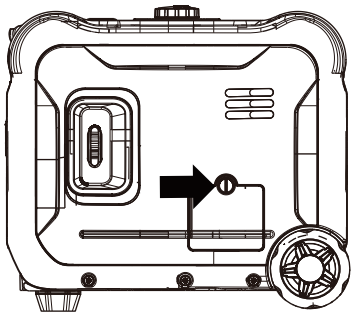

Figure 1: Engine Service Panel

2. Clean the area around the oil fill/drain plug and remove plug (See Figure 2).

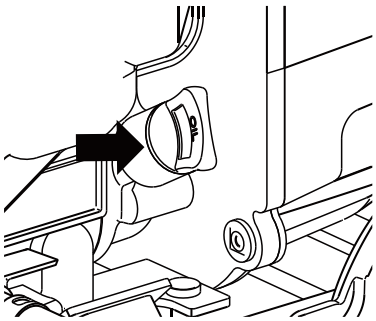

Figure 2: Oil Fill/Drain Plug

3. Using the funnel and oil, pour the entire bottle of oil into the engine (see Figure 3).

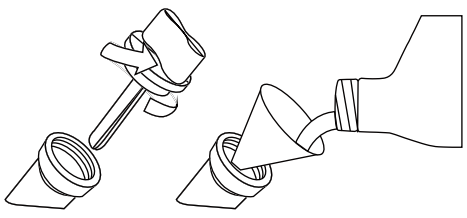

Figure 3: Oil Funnel

4. Do not overfill, if oil level is too high, oil will drain out through the fill plug. See correct oil level in Figure 4.

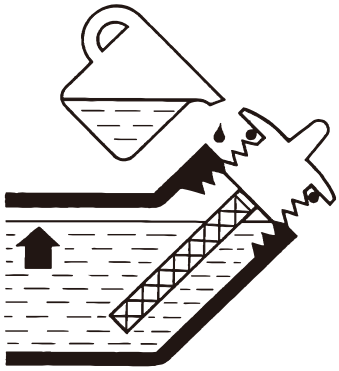

Figure 4: Engine Oil Correct Level

CONNECT THE BATTERY LINE

1. Open the battery maintenance cover.
2. A quick-connect battery plug is pre-installed on the battery. Just connect the battery plug.

Nominal Voltage: 12.8V. Rated Capacity: 1.6Ah.

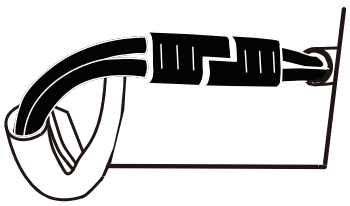

NOTICE

1. For the first use, open the side panel and connect the battery line.
2. Disconnect the battery line if long storage is required.
3. The generator is equipped with a battery charging feature. Once the engine is running, will slowly recharge the battery.

ADDING/CHECKING ENGINE FLUIDS AND FUEL



BEFORE ADDING/CHECKING ENGINE FLUIDS AND FUEL, REVIEW SAFETY SECTION STARTING ON PAGE 5.

⚠ DANGER



Filling the fuel tank with gasoline while the inverter is running can cause gasoline to leak and come in contact with hot surfaces that can ignite the gasoline.

Before starting the inverter, always check the level of:

- Engine oil
- Gasoline in the fuel tank

Once the inverter is started and the engine gets warm, it is not safe to add gasoline to the fuel tank or engine oil to the engine while the engine is running or the engine and muffler are hot.

CHECKING AND / OR ADDING ENGINE OIL

⚠ WARNING



Internal pressure can build in the engine crankcase while the engine is running. Removing the oil fill plug/dipstick while the engine is hot can cause extremely hot oil to spray out of the crankcase and can severely burn skin. Allow engine oil to cool for several minutes before removing the oil fill plug/dipstick.

The unit as shipped does not contain oil in the engine. You must add engine oil before starting the inverter for the first time. See Initial Oil Fill on page 12 for instructions on checking engine oil level and the procedure for adding engine oil.

NOTICE

The engine does not contain engine oil as shipped. Attempting to start the engine without adding engine oil will permanently damage internal engine components.

The engine is equipped with a low oil shutdown switch. If the oil level becomes low, the engine may shut down and not start until the oil is filled to the proper level.

The engine is equipped with a low oil shutdown switch. If the oil level becomes low, the engine may shut down and not start until the oil is filled to the proper level.

ADDING GASOLINE TO THE FUEL TANK

⚠ WARNING



Never refuel the inverter while the engine is running.



Always turn the engine off and allow the inverter to cool before refueling.

⚠ CAUTION



Avoid prolonged skin contact with gasoline. Avoid prolonged breathing of gasoline vapors.

Required Gasoline - Only use gasoline that meets the following requirements:

- Unleaded gasoline only
- Gasoline with maximum 10% ethanol added
- Gasoline with an 87 octane rating or higher

Filling the Fuel Tank - Follow the steps below to fill the fuel tank. Fuel Tank Capacity: 13.5L

1. Shut off the inverter.
2. Allow the inverter to cool down so all surface areas of the muffler and engine are cool to the touch.
3. Move the inverter to a flat surface.
4. Clean area around the fuel cap.
5. Remove the fuel cap by rotating counterclockwise.

NOTICE

Do not overfill the fuel tank. Spilled fuel will damage some plastic parts.

6. Slowly add gasoline into the fuel tank. Be very careful not to overfill the tank. The gasoline level should NOT be higher than the red ring (see Figure 5).
7. Install the fuel cap by rotating clockwise.

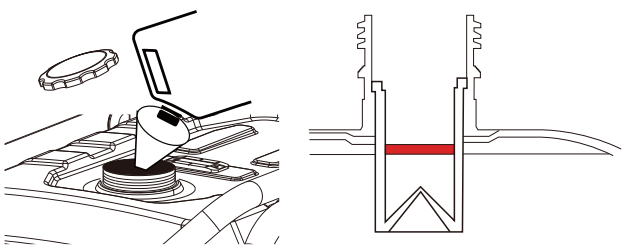

Figure 5: Maximum Gasoline Fill Level

OPERATION

STARTING THE INVERTER



BEFORE STARTING THE INVERTER, REVIEW SAFETY SECTION STARTING ON PAGE 5.

For proper starting and operation of the inverter, make sure you review the inverter features and their descriptions starting on page 8.

Before attempting to start the inverter, verify the following:

- The engine is filled with engine oil (see Figure 4: Engine Oil Correct Level on page 12).
- The inverter is situated in a proper location (see Location Selection on page 10).
- The inverter is on a dry surface (see Weather and Dry Surface on page 10).
- All loads are disconnected from the inverter (see No Connected Loads on page 10).
- The inverter is properly grounded (see Grounding the Inverter on page 10)

⚠ DANGER



Never use the inverter in a location that is wet or damp. Never expose the inverter to rain, snow, water spray or standing water while in use. Protect the inverter from all hazardous weather conditions. Moisture or ice can cause a short circuit or other malfunction in the electrical circuit.



Never operate the inverter in an enclosed area. Engine exhaust contains carbon monoxide. Only operate the inverter outside and away from windows, doors and vents.

Recoil Start

1. Remove all the loads out of the output;
2. Turn the oil switch to “ON”;
3. Turn the main switch to “ON”;
4. Then quickly pull the starting handle (see Figure 6), normal operation of generator.

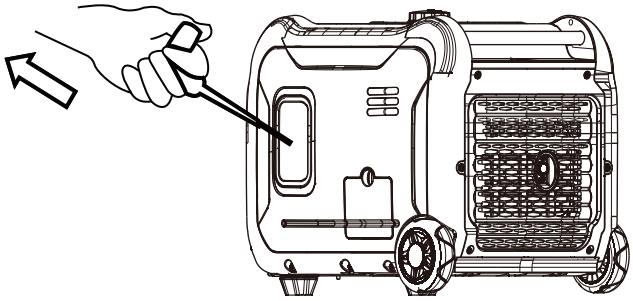

Figure 6: Pull the Recoil Handle out from Inverter

Electric Start

1. Remove all the loads out of the output;
2. Turn the oil switch to "ON";
3. Turn the main switch to "ON";
4. Press the start button 2-3s generator runs normally.

NOTICE

Do not press the one-key start button for more than 5 seconds, it may damage the starter motor. If the startup fails, release the switch and wait for 10 seconds to restart.
If the speed of the starter motor drops rapidly after a period of time, it means that the battery should be recharged.

Remote Start

1. Remove all the loads out of the output;
2. Turn the oil switch to "ON";
3. Turn the main switch to "ON";
4. Press "ON" botton on the remote controller for 2-3 second and the generator runs normally.

OPERATION

STOPPING THE INVERTER

Normal Operation

During normal operation, use the following steps to stop your inverter:

1. Remove all loads in the output;
2. Turn the oil switch to OFF and the generator stops running.
3. Turn the main switch to "OFF".

During an Emergency

To stop the engine in an emergency, turn the generator switch to the "OFF" position.

USING EFFICIENCY MODE

The inverter is equipped with an efficiency mode switch to minimize fuel consumption. In efficiency mode, the inverter will sense the load and adjust the engine RPM to the current load requirements. Efficiency mode should be used only after the inverter has been warmed up to operating temperature.

1. To turn on the efficiency mode, press the switch to the ON position).
2. If no load is present, the inverter RPM will drop down to an idle speed.
3. As a load is applied, the inverter will sense the load and engine RPM will increase according to the load applied.
4. To run the inverter at maximum power and RPM, press the efficiency mode switch to the OFF position.

RESETTING THE RESET BREAKER

The inverter will trip the breaker and automatically disconnect from the load when the controls sense a predetermined overload condition. The inverter engine will continue to run, but there will not be any electrical output.

1. Turn off all devices and unplug them from the inverter;
2. Determine the wattage required from the devices being powered by the inverter Make sure the wattage required does not exceed the maximum output of the inverter.
3. Press in the reset breaker to reset it (see Figure 7).

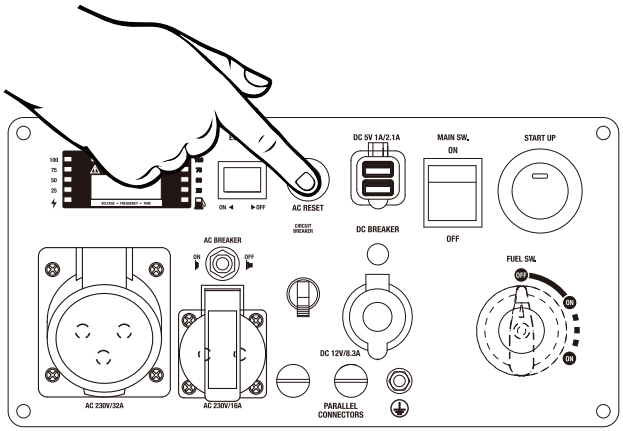

Figure 7: Press in reset breaker

4. Plug the devices in to the inverter.
5. Turn on the devices as needed.

MAINTENANCE



BEFORE PERFORMING MAINTENANCE ON THE INVERTER, REVIEW THE SAFETY SECTION STARTING ON PAGE 5, AS WELL AS THE FOLLOWING SAFETY MESSAGES.

⚠ WARNING



Avoid accidentally starting the inverter during maintenance by removing the spark plug boot from the spark plug. For electric start inverters, also disconnect the battery cables from the battery (disconnect the black negative (-) cable first) and place the cables away from the battery posts to avoid arcing.



Allow hot components to cool to the touch prior to performing any maintenance procedure.



Internal pressure can build in the engine crankcase while the engine is running. Removing the oil fill plug dipstick while the engine is hot can cause extremely hot oil to spray out of the crankcase and can severely burn skin. Allow engine oil to cool for several minutes before removing the oil fill plug/dipstick.



Always perform maintenance in a well- ventilated area. Gasoline fuel and fuel vapors are extremely flammable and can ignite under certain conditions.

⚠ CAUTION



Avoid skin contact with engine oil or gasoline. Prolonged skin contact with engine oil or gasoline can be harmful. Frequent and prolonged contact with engine oil may cause skin cancer, lake protective measures and wear protective clothing and equipment. Wash all exposed skin with soap and water.

⚠ WARNING



Failure to perform periodic maintenance or not following maintenance procedures can cause the inverter to malfunction and could result in death or serious injury.

NOTICE

Periodic maintenance intervals vary depending on inverter operating conditions. Operating the inverter under severe conditions, such as sustained high-load, high-temperature, or unusually wet or dusty environments, will require more frequent periodic maintenance. The intervals listed in the maintenance schedule should be treated only as a general guideline.

Following the maintenance schedule is important to keep the inverter in good operating condition. The following is a summary of maintenance items by periodic maintenance intervals.

TABLE 1: MAINTENANCE SCHEDULE – OWNER PERFORMED

Maintenance Item	Before Every Use	After First 20 Hours or First Month of Use	After 50 Hours of Use or Every 6 Months	After 100 Hour of Use or Every 6 Months	After 300 Hours of Use or Every Year
Engine Oil	Check Level	Change	Change	-	-
Cooling Features	Check/Clean	-	-	-	-
Air Filter	Check	-	Clean*	-	Replace
Spark Plug	-	-	-	Check/Clean	Replace
Spark Arrestor	-	-	-	Check/Clean	-

*Service more frequently if operating in dry and dusty conditions.

MAINTENANCE

ENGINE OIL MAINTENANCE

Engine Oil Specification

1. Only use the engine oil specified in Figure 8.
2. Only use 4-stroke/cycle engine oil. NEVER USE 2-STROKE/CYCLE OIL Synthetic oil is an acceptable substitute for conventional oil.

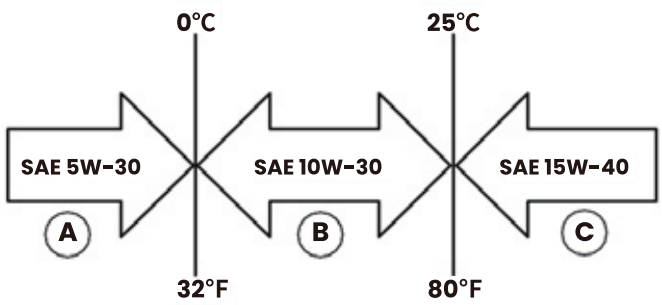

Figure 8 : Recommended Oil

CHECKING ENGINE OIL

NOTICE

Always maintain proper engine oil level. Failure to maintain proper engine oil level could result in severe damage to the engine and/or shorten the life of the engine.
Always use the specified engine oil. Failure to use the specified engine oil can cause accelerated wear and/ or shorten the life of the engine.

Engine oil level should be checked before every use.

1. Always operate or maintain the inverter on a flat surface.
2. Stop engine if running.
3. Let engine sit and cool for several minutes (allow crankcase pressure to equalize).
4. Remove the engine service panel to access the oil fill/drain plug.
5. With a damp rag, clean around the oil fill/drain plug.
6. Remove the oil fill/drain plug.
7. Check oil level: When checking the engine oil, remove the oil fill/ drain plug.

- The oil level is acceptable if oil is visible at the bottom of the threads of the oil fill plug.
- If oil level is low, add to the correct level using the supplied oil fill bottle. Do not overfill the oil crankcase.

NOTICE

Engine oil must always be checked and added when the inverter is on a flat, level surface, or an naccurate reading may result, causing serious engine damage.

ADDING ENGINE OIL

1. Always operate or maintain the inverter on a flat surface.
2. Stop engine if running.
3. Let engine sit and cool for several minutes (allow crankcase pressure to equalize).
4. Remove the engine service panel to gain access to the oil fill/drain plug.
5. Thoroughly clean around the oil fill/drain plug.
6. Remove the oil fill/drain plug.
7. Select the proper engine oil as specified in Figure 11.
8. Using the supplied oil funnel, slowly add engine oil to the engine. Stop frequently to check the oil level and avoid overfilling.

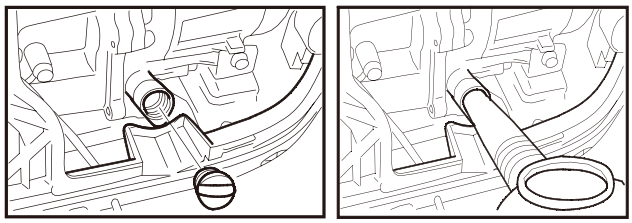

9. Continue to add oil until the oil is at the correct level.

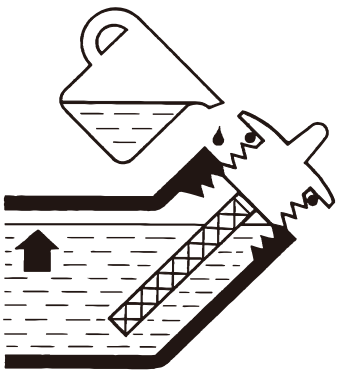

MAINTENANCE

CHANGING ENGINE OIL

Engine Oil Specification

1. Stop the engine.
2. Let engine sit and cool for several minutes (allow crankcase pressure to equalize).
3. Remove the engine service panel to gain access to the oil fill/drain plug.
4. Place oil pan (or suitable container) under the oil fill/ drain plug (see Figure 9).

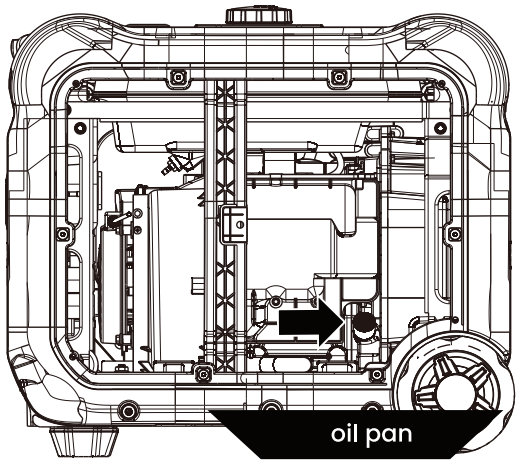

Figure 9: Place oil pan under oil fill/drain plug

5. With a damp rag, thoroughly clean around the oil fill/drain plug.
6. Tilt the inverter so the oil drains down the through into the container.

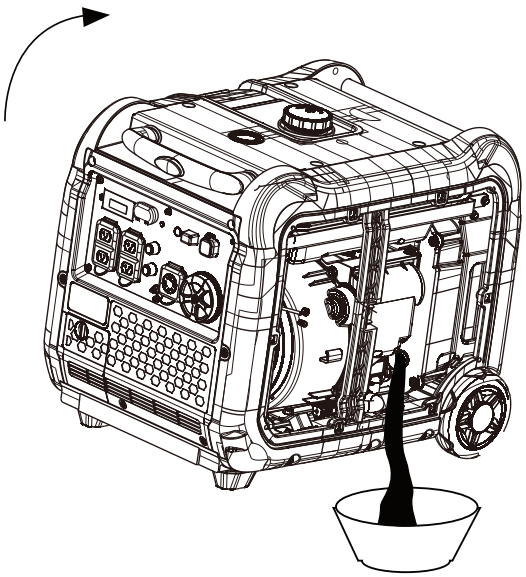

Figure 10: Carefully tip Inverter so oil flows into oil pan

7. Allow oil to completely drain.
8. Fill crankcase with oil following the steps outlined in Adding Engine Oil on page 17.
9. Dispose of used engine oil properly.

NOTICE

Never dispose of used engine oil by dumping the oil into a sewer, on the ground, or into groundwater or waterways. Always be environmentally responsible. Follow the guidelines or other governmental agencies for proper disposal of hazardous materials. Consult local authorities or reclamation facility.

AIR FILTER MAINTENANCE

⚠ WARNING



Never use gasoline or other flammable solvents to clean the air filter. Use only household detergent soap to clean the air filter.

Cleaning the Air Filter

The air filter must be cleaned after every 50 hours of use or 3 months (frequency should be increased if inverter is operated in a dusty environment).

1. Turn off the inverter and let it cool for several minutes if running.
2. Remove the engine service panel to gain access to the air filter.
3. Unscrew the air cleaner cover and tip the cover down (see Figure 11)
4. Remove the foam element from the air cleaner housing.

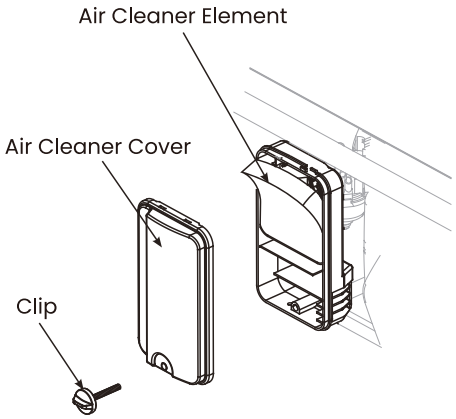

Figure 11: Unscrew air cleaner cover

5. Wash the foam air filter element by submerging the element in a solution of household detergent soap and warm water. Slowly squeeze the foam to thoroughly clean.

NOTICE

NEVER twist or tear the foam air filter element during cleaning or drying. Only apply slow but firm squeezing action.

6. Rinse in clean water by submerging the air filter element in fresh water and applying a slow squeezing action (see Figure 12).



Figure 12

NOTICE

Never dispose of soap cleaning solution used to clean the air filter by dumping the solution into a sewer, on the ground, or into ground water or waterways. Always be environmentally responsible. Follow the guidelines or other governmental agencies for proper disposal of hazardous materials. Consult local authorities or reclamation facility.

7. Dispose of used soap cleaning solution properly.
8. Dry the air filter element by again applying a slow firm squeezing action.
9. Return the air filter element to its position in the air cleaner housing.
10. Install the air cleaner cover, making sure the tabs lock into place.
11. Install the engine service panel.

DRAINING THE FLOAT BOWL

1. Remove the engine service panel to access the carburetor.
2. Locate the clear plastic hose from the float that is exiting out the bottom of the inverter, and place a suitable container under it to catch the drained fuel (see Figure 13).

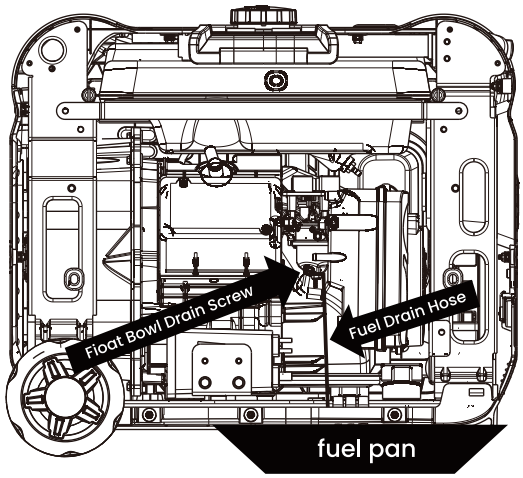

Figure 13: Fuel drain hose

3. Loosen the float bowl drain screw (see Figure 14) until fuel is seen draining from the float bowl.

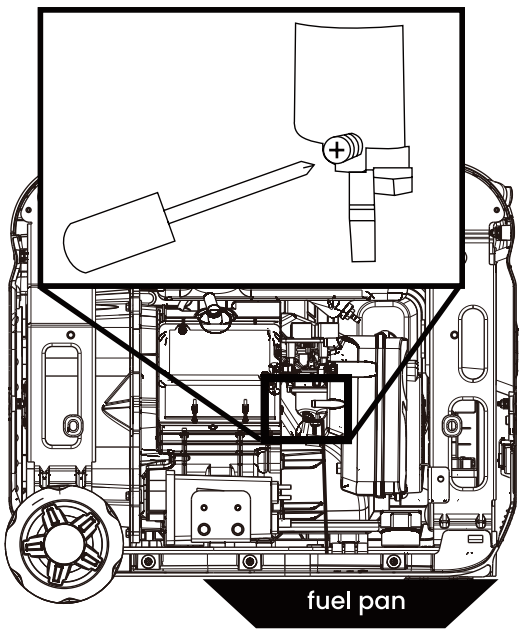

Figure 14: Loosen float bowl screw

4. Allow fuel to drain into the container, and then tighten the float bowl drain screw.

NOTICE

Never dispose of fuel by dumping fuel into a sewer, on the ground, or into groundwater or waterways. Always be environmentally responsible. Follow the guidelines or other governmental agencies for proper disposal of hazardous materials. Consult local authorities or reclamation facility.

5. Install the engine service panel.

MAINTENANCE

SPARK PLUG MAINTENANCE

The spark plug must be checked and cleaned after every 100 hours of use or 6 months and must be replaced after 300 hours of use or every year.

1. Stop the inverter and let it cool for several minutes if running.
2. Move the inverter to a flat, level surface.
3. Slide the spark plug access cover off the housing (see Figure 15).

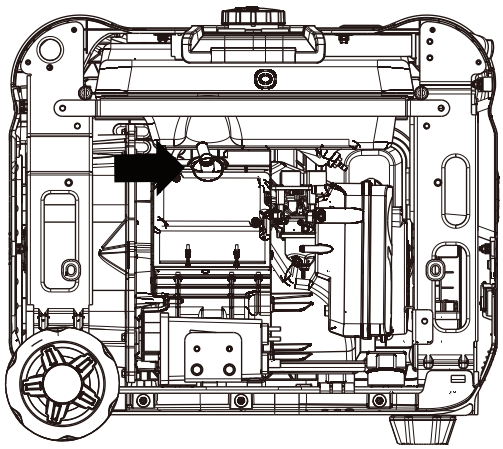

Figure 15: Slide off spark plug cover

4. Remove the spark plug boot by firmly pulling the plastic spark plug boot handle directly away from the engine.

NOTICE

Never apply any side load or move the spark plug laterally when removing the spark plug. Applying a side load or moving the spark plug laterally may crack and damage the spark plug boot.

5. Clean area around the spark plug.
6. Using the spark plug socket wrench provided, remove the spark plug from the cylinder head (see Figure 16).

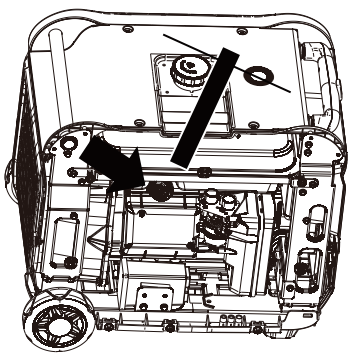

Figure 16: Slide off spark plug cover

7. Place a clean rag over the opening created by the removal of the spark plug to make sure no dirt can get into the combustion chamber.
8. Inspect the spark plug for:

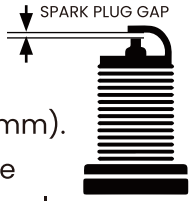

- Cracked or chipped insulator
- Excessive wear
- Spark plug gap of 0.032 in. (0.80 mm).

If the spark plug fails any one of the conditions listed above, replace the plug.

NOTICE

Only use the recommended spark plug. Using a non- recommended spark plug could result in damage to the engine.

9. Install the spark plug by carefully following the steps outlined below:
   a. Carefully insert the spark plug back into the cylinder head. Hand-thread the spark plug until it bottoms out.
   b. Using the spark plug socket wrench provided, turn the spark plug to ensure it is fully seated.
   c. Replace the spark plug boot, making sure the boot fully engages the spark plug's tip.
   d. Install the spark plug access coven

BRAND	TYPE
TORCH	F7RTC/F6RTC
NGK	BPR6ES

MAINTENANCE

CLEANING THE SPARK ARRESTOR

Check and clean the spark arrestor after every 100 hours of use or 6 months.

1. Stop the inverter and let it cool for several minutes if running.
2. Move the inverter to a flat, level surface.
3. Remove the screws holding the muffler cover in place (see Figure 17).

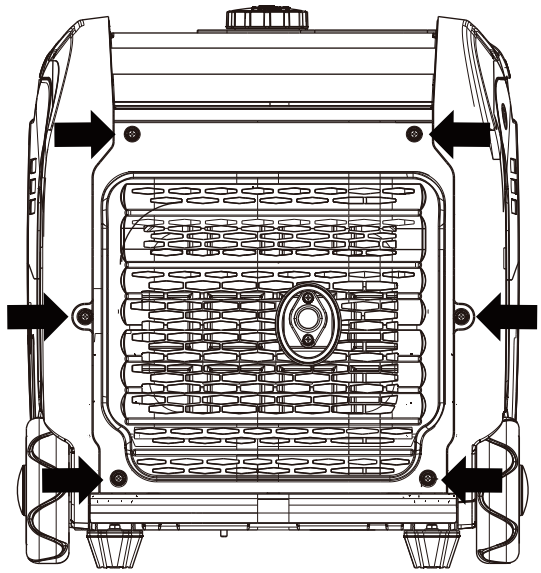

Figure 17: Remove screws holding muffler cover

4. Loosen the clamp holding the spark arrestor onto the muffler.
5. Slide the spark arrestor band clamp off the spark arrestor screen.
6. Pull the spark arrestor screen off the muffler exhaust pipe.
7. Using a wire brush, remove any dirt and debris that may have collected on the spark arrestor screen.
8. If the spark arrestor screen shows signs of wear (rips, tears or large openings in the screen), replace the spark arrestor screen.
9. Install the spark arrestor components in the following order:
   a. Place spark arrestor screen over the muffler exhaust pipe. Push on the screen until it fully bottoms out.
   b. Place the spark arrestor band clamp over the screen and tighten with a flathead screwdriver
10. Replace the discharge gate.

CLEANING THE INVERTER

It is important to inspect and clean the inverter before every use.

Clean All Engine Air Inlet and Outlet Ports – Make sure all engine air inlet and outlet ports are clean of any dirt and debris to ensure the engine does not run hot.

STORAGE

⚠ WARNING



Never store an inverter with fuel in the tank indoors or in a poorly ventilated area where the fumes can come in contact with an ignition source such as a: 1) pilot light of a stove, water heater, clothes dryer or any other gas appliance; or 2) spark from an electric appliance.

NOTICE

Gasoline stored for as little as 60 days can go bad, causing gum, varnish and corrosive buildup in fuel lines, fuel passages and the engine. This corrosive buildup restricts the flow of fuel, preventing an engine from starting after a prolonged storage period.

Proper care should be taken to prepare the inverter for any storage

1. Clean the inverter as outlined in Cleaning the Inverter.
2. Siphon all gasoline from the fuel tank as best as possible.
3. Start the engine and allow the inverter to run until all the remaining gasoline in the fuel lines and carburetor is consumed and the engine shuts off.
4. Drain any remaining fuel from the float bowl. See Draining the Float Bowl on page 19.
5. Change the oil (see Changing Engine Oil on page 18).
6. Remove the spark plug (see Spark Plug Maintenance on page 20) and place about 1 tablespoon of oil in the spark plug opening. While placing a clean rag over the spark plug opening, slowly pull the recoil handle to allow the engine to turn over several times. This will distribute the oil and protect the cylinder wall from corroding during storage.
7. Replace the spark plug (see Spark Plug Maintenance on page20).
8. Move the inverter to a clean, dry place for storage.

TROUBLESHOOTING

⚠ WARNING



Before attempting to service or troubleshoot the generator, the owner or service technician must first read the owner's manual and understand and follow all safety instructions. Failure to follow all instructions may result in conditions that can lead to voiding certification or product warranty, serious personal injury, property damage or even death.

PROBLEM	POTENTIAL CAUSE	SOLUTION
Engine is running, but no electrical output.	1. Reset breaker is tripped.	1. Reset the reset breaker (see page 15).
	2. The power cord's plug connector is not fully engaged in the inverter's outlet.	2. Verily plug connector is firmly engaged in the inverter's outlet.
	3. Faulty or defective power cord.	3. Replace power cord.
	4. Faulty or defective electrical appliance.	4. Try connecting a known good appliance to verify the inverter is producing electrical power.
Engine will not start or remain running while trying to start.	1. Inverter is out of gasoline.	1. Add gasoline to the inverter (see page 13).
	2. Fuel flow is obstructed.	2. Inspect and clean fuel delivery passages.
	3. Dirty air filter.	3. Check and clean the air filter (see page 18).
	4. Low oil level shutdown switch is preventing the unit from starting.	4. Check oil level and add oil if necessary (see page 17).
	5. Spark plug boot is not fully engaged with the spark plug tip.	5. Firmly push down on the spark plug boot to ensure the boot is fully engaged.
	6. Spark plug is faulty.	6. Remove and check the spark plug. Replace if faulty (see pages 20).
	7. Dirty/plugged spark arrestor.	7. Check and clean the spark arrestor (see page 21).
	8. Stale fuel.	8. Drain fuel and replace with fresh fuel.
Inverter suddenly stops running.	1. Inverter is out of fuel.	1. Check fuel level (see page 13). Add fuel if necessary.
	2. The low oil shut down switch has stopped the engine.	2. Check oil level and add oil if necessary (see page 17).
	3. Too much load.	3. Restart the inverter and reduce the load.
Engine runs erratic; does not hold a steady RPM.	1. Choke was left in the CHOKE position.	1. Move choke to the RUN position.
	2. Dirty air filter.	2. Clean the air filter (see page 18).
	3. Applied loads maybe cycling on and off.	3. As applied loads cycle, changes in engine speed may occur; this is a normal condition.

MXR5500 SCHEMATICS

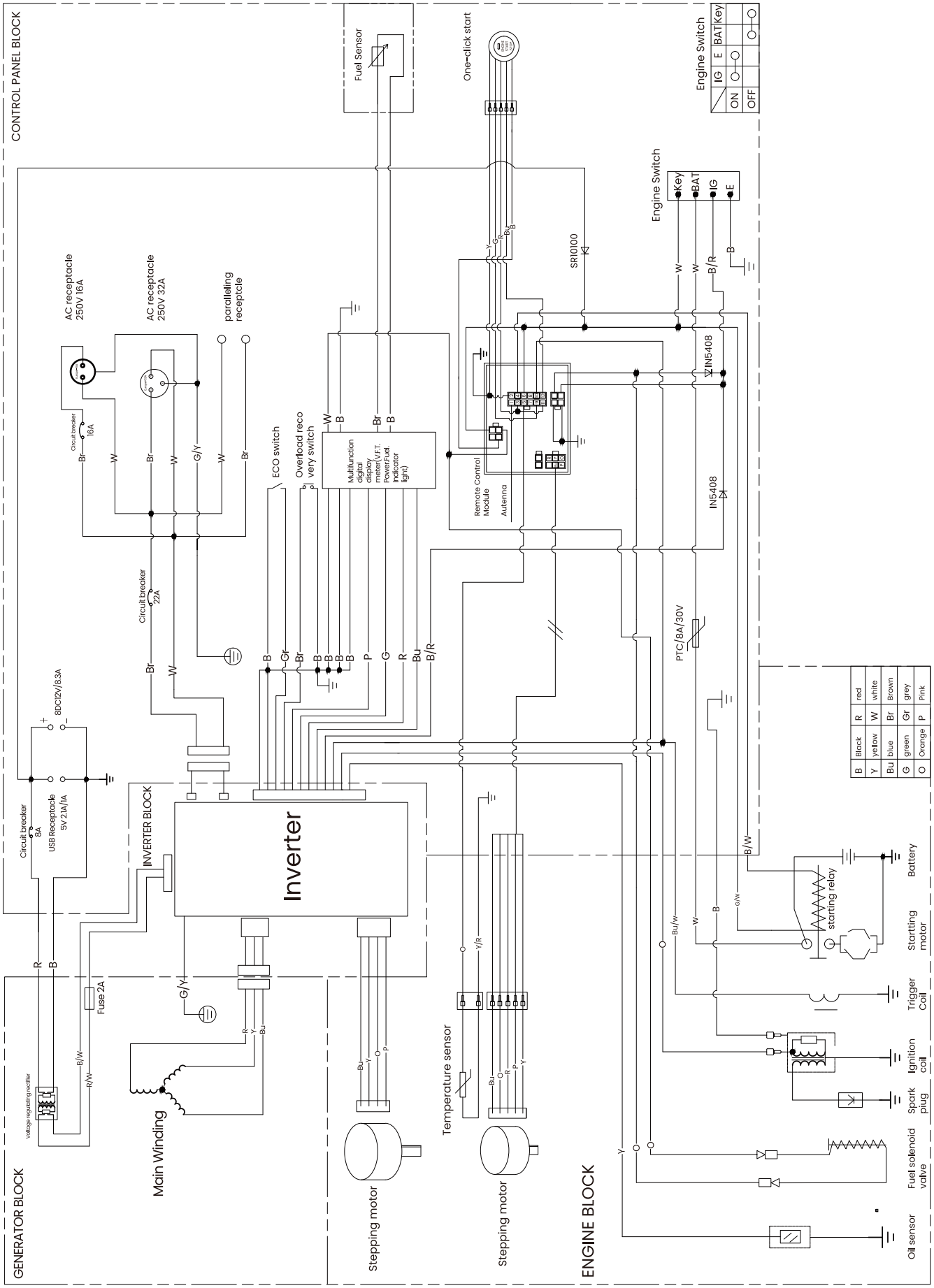

MAINTENANCE NOTES

EC DECLARATION OF CONFORMITY

The following products have been tested by us with the listed standards and found in compliance with the European Community Machinery Directive 2006/42/EC, Eectromagnetic Compatibility Directive 2014/30/EU.

Manufacture's Name:	Chongqing Guoyu Technology Co., Ltd
Manufacturer's Address:	Tuchang Town, Hechuan District, Chongqing, China
Product:	Inverter generator
Type/Model:	MXR2300, MXR3500, MXR5500

The statement is based on a single evaluation of above-mentioned products. All products in series production are in conformity with the product sample detailed in this report. We Chongqing Guoyu Technology Co., Ltd hereby declare that this product(s) described complies with the relevant basic safety requirements of the following EU directives:

Applied EC Directives:	2006/42/EC Machinery Directive
	2014/30/EU Electromagnetic Compatibility Directive
Applied Standards:	EN ISO 8528-13:2016
	EN 61000-6-1:2007
	EN 55012:2007+A1
Notified Body:	TUV Rheinland LGA Products GmbH

CE

Place of issue: Chongqing

Date of issue: 28/4/2022

Product Technical Director: Tang Guolan

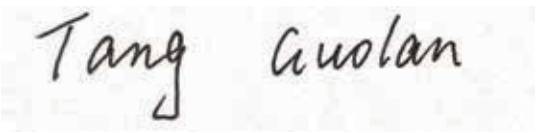

MAXPEEDINGRODS

MAXPEEDINGRODS

CE

EC REP	APEX ES SPECIALISTS, S.L.
	Calle Puerto de la Morcuera, 13, PL. 1 OF. 18-8 28919 Leganés Madrid

Chongqing Guoyu Technology Co., Ltd