User Manual of Product 1:

Midea Cube 20 Pint Dehumidifier for Basement and Rooms at Home for up to 1,500 Sq. Ft., Smart Control, Works with Alexa (White), Drain Hose Included, ENERGY STAR Most Efficient 2023

User Manual of Product 2:

Midea Cube 35 Pint Dehumidifier for Basement and Rooms at Home for up to 3,500 Sq. Ft., Smart Control, Works with Alexa (White), Drain Hose Included, ENERGY STAR Most Efficient 2023

en

USER MANUAL

Dehumidifier

MAD

Rated voltage: 115V
Frequency: 60Hz

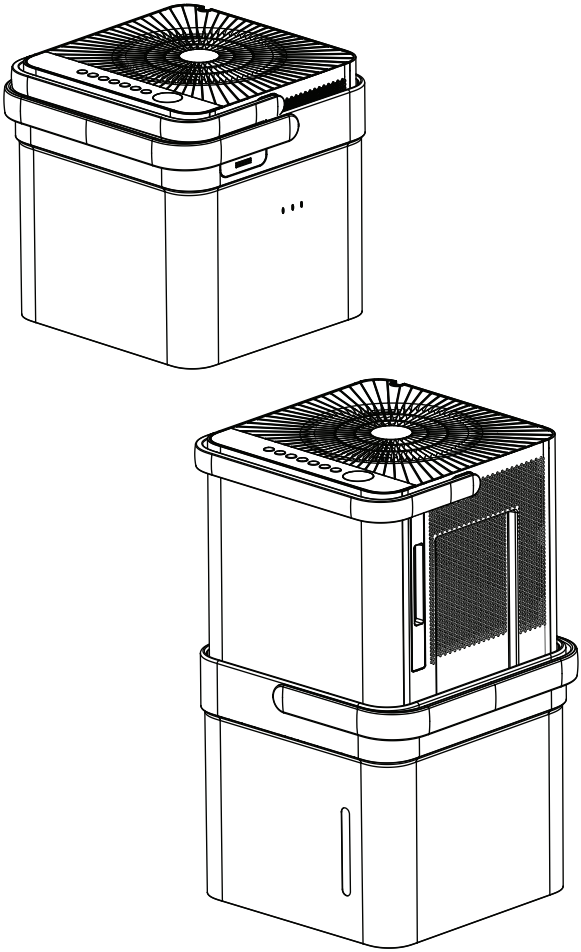

Warning notices: Before using this product, please read this manual carefully and keep it for future reference.

The design and specifications are subject to change without prior notice for product improvement.

MAD20S1QWT
MAD35S1QWT
MAD50S1QWT
MAD50PS1QWT
MAD50PS1QGR

www.midea.com

1 Safety Precautions 3
2 Unit Specifications and Features 6
3 Set Up Instructions 7
4 Installation Instructions 8
5 Operating Instructions 9
6 Care and Cleaning 15
7 Nesting and Storing Instructions 16
8 Troubleshooting Tips 17
9 App Instructions 18

Read This Manual

Inside you will find many helpful hints on how to use and maintain your Dehumidifier properly. A little preventive care on your part can save you a great deal of time and money over the life of your Dehumidifier. You'll find many answers to common problems in the troubleshooting tips - you should be able to fix most of them quickly before calling service. These instructions may not cover every possible condition of use, so common sense and care for safety is required when installing, operating and maintaining this product.

CAUTION

- For support, please call the Service Center at 1-866-646-4332.
- This appliance is not intended for use by people (including children) with reduced physical, sensory, or mental capabilities or lack of experience and knowledge, unless they have been given supervision or instruction concerning use of the appliance by a person responsible for their safety.
- Children should be supervised to ensure that they do not play with the appliance.
- The appliance shall be installed in accordance with National wiring regulations and local electrical codes.

NOTICE

All the pictures in this manual are for illustrative purposes only. The actual shape of the dehumidifier you purchased may be slightly different, but its operations and functions are similar.

SAFETY PRECAUTIONS

To prevent injury to the user or personal and property damage, these instructions must be followed. Incorrect operation due to ignoring of instructions may cause harm or damage. The level of risk is shown by the following indications.

⚠ WARNING **This symbol indicates a hazardous situation which, if not avoided, could result in death or serious injury.**

⚠ CAUTION **This symbol indicates a hazardous situation, which, if not avoided, could result in minor or moderate injury.**

NOTICE **This symbol addresses practices not related to physical injury.**

⚠ WARNING

- Do not modify power cord length or share the outlet with other appliances.
  It may cause electric shock or fire due to overheating.
- Do not operate or stop the unit by inserting or pulling out the power plug.
  It may cause electric shock.
- Do not allow water to enter into electric parts.
  It may cause failure or electric shock.
- Do not use the power outlet if it is loose or damaged.
  It may cause fire and electric shock.
- Do not use or keep the power cord close to heating appliances or heat sources such as fireplaces.
  It may cause fire and electric shock.
- Do not disassemble or modify unit.
  It may cause failure and electric shock.
- Do not damage or use an unspecified power cord.
  It may cause fire and electric shock.
- Do not use the unit near flammable gas or combustibles, such as gasoline, benzene, thinner, etc.
  It may cause fire.
- Do not operate with wet hands.
  It may cause electric shock.
- Do not open the unit during operation.
  It may cause electric shock.
- Do not drink the water from the bucket.
- Do not use the unit in small spaces or place in a sink or shower.
  Lack of ventilation can cause overheating and fire.
- Do not attempt to repair the unit yourself.

⚠ WARNING

- Avoid fire hazard or electric shock.
  Do not use an extension cord or an adaptor plug. Do not remove any prongs from the power cord.
- Plug in power plug properly.
  Otherwise, it may cause electric shock or fire due to excess heat generation.
- Always ensure effective grounding.
  Incorrect grounding may cause electric shock.
- Unplug the unit if strange sounds, smells, or smoke come from it.
  A damaged product may cause fire and electric shock.
- Ventilate room before operating the unit if there is a gas leak from other appliances.
- If the power cord is damaged, it must be replaced by the manufacturer or an authorized service center in order to avoid electrical risk.
- Before cleaning, turn off the power and unplug the unit.
- Be sure the dehumidifier has been securely and correctly installed according to the installation instructions in this manual. Save this manual for possible future use in removing or installing this unit.
- Be sure the dehumidifier is properly grounded. To minimize shock and fire hazards, proper grounding is important.
  The power cord is equipped with a three-prong grounding plug for protection against shock hazards.
- Your dehumidifier must be used in a properly grounded wall receptacle. If the wall receptacle you intend to use is not adequately grounded or protected by a time delay fuse or circuit breaker, have a qualified electrician install the proper receptacle. Ensure the receptacle is accessible after the unit installation.
- Be sure the electrical service is adequate for the model you have chosen. This information can be found on the serial plate, which is located on the side of the cabinet and behind the grille.
- Make sure the bucket is empty of water before nesting unit.
  It could cause electric shock and/or damage the unit.
- Unplug the unit before nesting it in the bucket.
  It could cause electric shock and/or damage the unit.
- When unplugging the unit, be sure to grab the plug, not the cord.

⚠ CAUTION

- Do not use in places where water may splash onto the unit.
  Water may enter the unit and degrade the insulation. It may cause an electric shock or fire.
- Place the unit on a level, sturdy section of the floor.
  If the unit falls over, it may cause water to spill and damage belongings, or cause electrical shock or fire.
- Never insert your finger or other foreign objects into grills or openings. Take special care to warn children of these dangers.
  It may cause failure or electric shock.
- Do not climb up on or sit on the unit.
  You may be injured if you fall or if the unit falls over.
- Always insert the filters securely, and take caution to avoid injuries to hand and fingers. Clean filter once every two weeks.
- If water enters the unit, turn the unit off and disconnect the power, contact the Service Center at 1-866-646-4332.
- If the unit is knocked over during use, turn off the unit and unplug it from the main power supply immediately. Visually inspect the unit to ensure there is no damage. If you suspect the unit has been damaged, contact customer service.
- In a thunderstorm, the power should be disconnected to the unit due to lightning.
- Do not run power cord under carpeting. Do not cover cord with throw rugs, runners, or similar coverings. Do not route cord under furniture or appliances. Arrange cord away from traffic area and where it will not be tripped over.
- Do not place anything on top of the unit.
  This would restrict airflow, possibly damage the unit and decrease performance.
- Always lift unit with 2 hands using proper lifting technique.
- Before turning the unit on, make sure it is seated correctly on the bucket.
- Before lifting ensure the handle is properly attached.
- Only use the bucket that came with the unit. Do not use any other bucket.
- Clean the bucket regularly.

UNIT SPECIFICATIONS AND FEATURES

Product overview

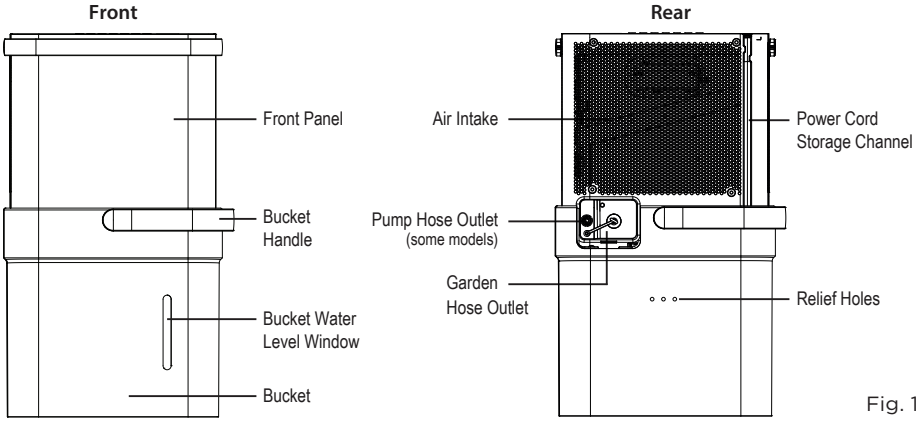

Fig. 1

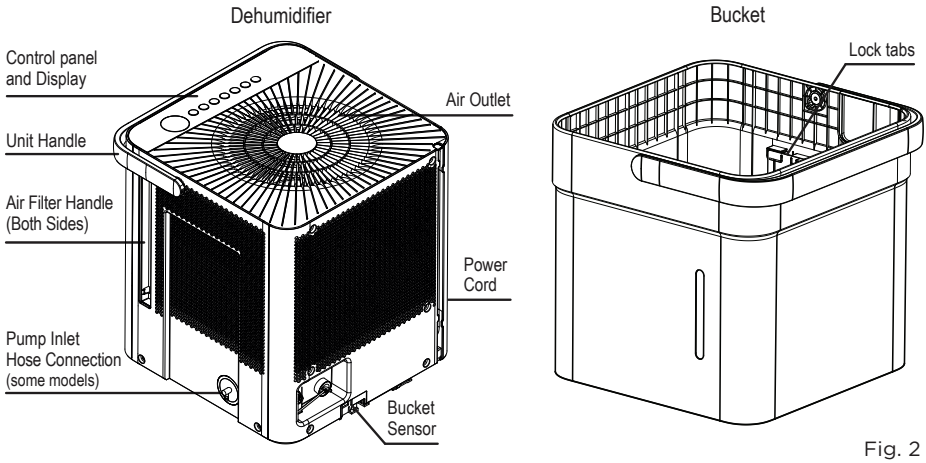

Fig. 2

Accessories

Pump drain hose (only for units with the drain pump feature)	
Pump inlet hose (only for units with the drain pump feature)	
Normal drain hose	

SET UP INSTRUCTIONS

Step 1:

Separate dehumidifier & bucket from the nested shipping/storage position.

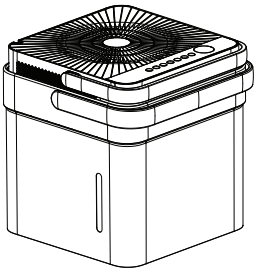

Fig. 3a

Nested Shipping & Storage Position

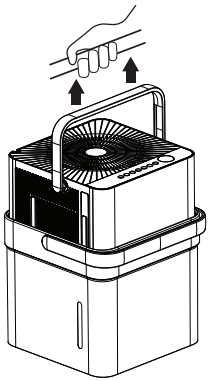

Fig. 3b

Step 2:

Rotate dehumidifier 90° and align the arrows on the two labels (one on the bucket and one on the dehumidifier) and carefully sit the dehumidifier down onto the bucket. The water level window in the bucket and the user interface buttons on the dehumidifier should be on the same side when properly stacked. Check to ensure the arrows on the unit and bucket are aligned as in Fig. 4c for proper operation.

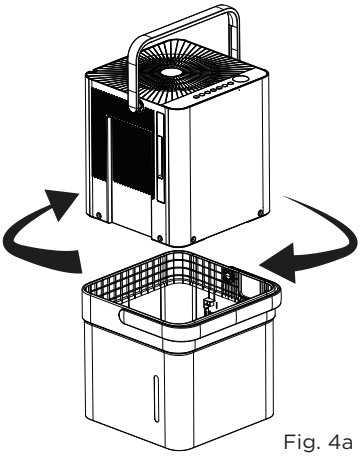

Fig. 4a

Rotate dehumidifier 90°

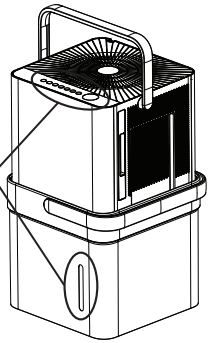

Fig. 4b

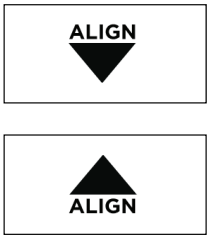

Fig. 4c

Step 3:

Plug the unit in and press the power button and the unit is ready to run in normal (bucket) mode.

INSTALLATION INSTRUCTIONS

Positioning the Unit

The dehumidifier should be placed in the area where dehumidification is desired most. Adjacent rooms in which dehumidification is also desired should allow adequate airflow in and out of the space containing the dehumidifier.

- Do not use outdoors.
- This dehumidifer is intended for indoor residential applications only. This dehumidifier should not be used for commercial or industrial applications.
- Place the dehumidifier on a smooth, level floor strong enough to support the unit with a full bucket of water.
- Allow at least 8” of air space on all sides of the unit for air circulation (at least 16” for air outlet).
- Place the unit in an area where the temperature will not fall below 41°F (5°C). The coils can become covered with frost at at lower temperatures, which may reduce performance.
- Place the unit away from any clothes dryer, heater or radiator.
- Close all doors, windows, and other openings to the outdoors in the room.

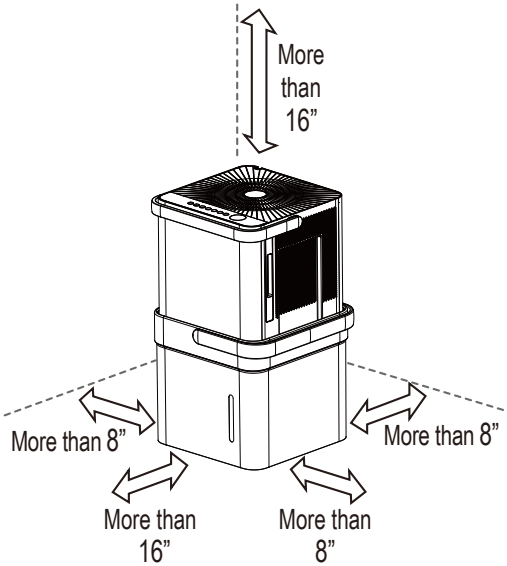

Fig. 5

Additional Setup and Usage Information

Scan this QR code with your mobile device to see a playlist of helpful videos about your new Cube Dehumidifier.

OPERATING INSTRUCTIONS

Key Pad Features

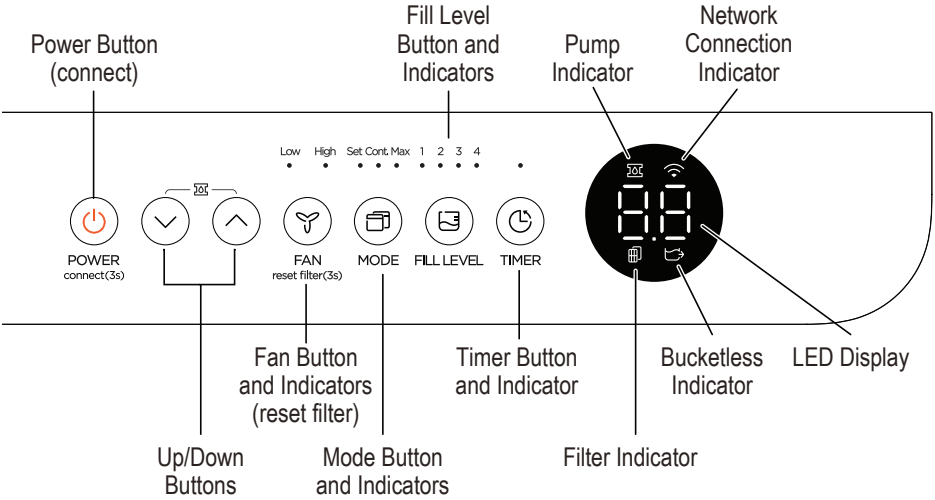

NOTICE

The appearance of the control panel on your unit may vary slightly. Functions will be similar.

Operating Instructions

When you push the button to change operation modes, the unit will make a beep sound to indicate that it is changing modes.

Power Button:

Press this button to turn the unit On/Off.

Connect:

Holding the power button for 3 seconds will place the unit in network connection mode to setup wireless control.

Up/Down Buttons:

Press these buttons to adjust the setpoint or to set the timer feature. Holding the Up and Down buttons for 3 seconds will activate pump mode if the bucket is in place (some models).

Fan Button:

Press this button to change the fan speed between High and Low.

Filter Reset:

To reset the change filter indicator, hold the fan button for 3 seconds.

Mode Button:

Press this button to change the mode of the dehumidifier between Set mode, Max mode, and Continuous run mode.

Set – The dehumidifier runs until the humidity setpoint has been reached. The dehumidifier will begin running once the humidity rises above the setpoint again.

Max – The dehumidifier will run continuously on High Fan.

Continuous – The dehumidifier will run continuously and the fan speed can be changed in this operating mode.

NOTICE

While operating on continuous and Max modes, the humidity setpoint cannot be adjusted manually.

Fill Level Button:

Press this button to change the required water level before the bucket full switch activates. The options will fill approximately to the amounts shown in the table below:

Fill level	Models MAD20S1QWT	Models MAD35S1QWT MAD50S1QWT MAD50PS1QWT MAD50PS1QGR
1	1.5 gallons (17 lb)	2.25 gallons (24 lb)
2	2 gallons (21 lb)	3 gallons (30 lb)
3	2.75 gallons (27.5 lb)	3.75 gallons (36.5 lb)
4	3 gallons (29.5 lb)	4.25 gallons (40.5 lb)

Choose the option which is most comfortable for you when emptying the bucket.

When the bucket is full, the Display will show P2.

The weights above are approximate weights of the bucket when filled with the corresponding volume of water.

NOTICE

For accurate fill levels, ensure the bucket is empty before beginning operation.

Timer Button:

Press this button to activate the Timer function. The Timer LED will illuminate indicating timer mode is being set. 0.0 will also appear on the display indicating the number of hours from now until the timer function will initiate. When the timer function initiates, the unit will change its power state. For more information see Timer function under other features on the next page.

Bucketless mode:

Bucketless mode allows you to run the unit without the bucket in place. The included drain hose or a garden hose must be attached for proper bucketless mode operation. To activate bucketless mode, the following steps must be completed within three minutes of plugging the dehumidifier in.

1. Press and hold the up and fill level buttons for 3 seconds until the bucketless icon appears on the display.
2. Ensure the dehumidifier is on flat level ground (free of debris).
3. Make sure the hose for bucketless mode does not rise above the connection point on the unit.
4. Attempting to change the unit into bucketless mode while it is sitting on the bucket will have no effect.

To remove the unit from bucketless mode, place the unit back on the bucket.

Error Codes and Protection Code:

EH60 - Room temperature r sensor error--Unplug the unit and plug it back in. If error repeats, call for service.

EH61 - Tube Temperature sensor of the evaporator error-- Unplug the unit and plug it back in. If error repeats, call for service.

EH0b - Display board and master control board communication error.Unplug the unit and plug it back in. If error repeats, call for service.

P2 - Bucket has reached the set Fill Level– Empty the bucket and place the unit on the bucket properly.

Eb - Bucket is removed or not in right position - Replace the bucket in the right position. (only available for the unit with pump feature.)

Other Features

Auto Defrost

When frost builds up on the evaporator coils, the compressor will cycle off and Auto Defrost function will run automatically.

3 minute compressor operation delay protection

After the unit has stopped, it can not be restarted in the first 3 minutes to protect compressor operation. The unit will restart automatically after 3 minutes.

Auto-Restart

If the unit stops unexpectedly due to power being cut, it will restart with the previous function setting (except bucketless mode) automatically when the power resumes.

Timer Function

- When activating the Timer function, you are setting the time until the unit changes its power state. This means, if the unit is on, activating the timer function will set the time until the unit will turn off. If the unit is off, activating the timer function will set the time until the unit will turn on.
- The time can be set after pressing the timer button then using the up or down buttons. These buttons will change the time in 0.5 hour increments up to 10 hours. After 10 hours, the time will change in 1 hour increments up to 24.
- If an error code appears during this time, the timer function will be cancelled.

NOTICE

- When first using the dehumidifier, operate the unit continuously 24 hours. Make sure the plastic cover on the continuous drain hose outlet is installed properly so there are no leaks.
- This unit is designed to operate in a working environment between 5°C/41°F and 35°C/95°F.
- Make sure the water bucket is positioned correctly so that the unit can operate properly. When the water in the bucket reaches a certain level, please be careful while moving the unit to avoid spilling.

Removing Collected Water

There are three ways to remove collected water:

1. Emptying the bucket

- When the bucket reaches the set Fill Level, the unit's display will show P2 regardless of power status.
- Using proper lifting techniques, remove the unit from the bucket. Be aware, some residual water may spill from the bottom of the unit while not on the bucket.
- Using two hands, grab the bucket handle and carry it to the desired drainage point. Pouring from a front corner of the bucket (the bucket window is on the front side), empty the bucket. If pouring from the back of the bucket, some water may spill from the relief holes.
- Return the bucket to the desired operating location and place the unit back on the bucket. Be sure the unit is aligned properly.

1. Lift the unit off the bucket and place it on a level surface.

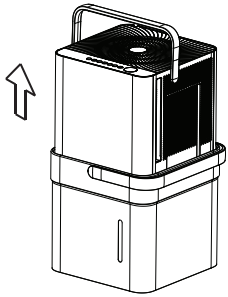

2. Lift the bucket using 2 hands and carry to drainage point.

Fig. 6

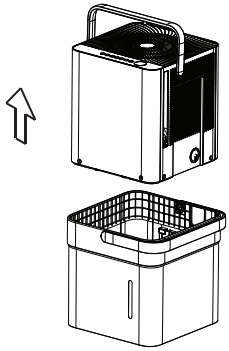

3. Pour out all of the water.

Fig. 7

NOTICE

- When you remove the unit from the bucket do not set the unit on any electrical components as the bottom may be wet.
- Do not set the unit on an uneven surface after removing it from the bucket.
- Ensure the unit is seated properly after returning it to the bucket.
- If the unit is removed from the bucket during operation, the display will show the error code Eb and cease operation until returned to the bucket or changed to bucketless mode.

2. Continuous draining

- Water can be automatically emptied from the unit into a sink, or other type of drain using the included hose.
- To install the hose, remove the drain cap from the rear of the unit and set aside. Insert the included drain hose, or attach a garden hose to the drain outlet. Place the other end of the hose on or near the drain so that water will drain properly.

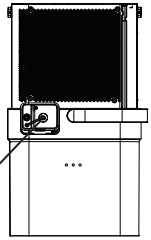

Fig. 8

- When removing the drain hose, some water may remain in the hose or the drain outlet. Be sure this water will not spill by drying the wet area before moving the unit.

NOTICE

When using the continuous draining feature, ensure the unit is placed above the sink or drain being used. This will ensure proper draining.

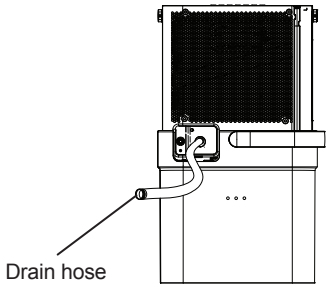

Fig. 9

3. Pump draining (some models)

- Water can be pumped from the unit into a sink or other type of drain by putting the unit in pump mode and attaching the included pump hose. Be sure to install both the inlet and outlet pump hoses as shown in the figures on the right.
- To install the pump hose, remove the plug from the pump drain hole and firmly attach the the included pump hose as shown in Fig. 10.
- Initiate pump mode by holding both the up and down arrows for three seconds.
- The pump inlet hose must be placed in the bucket in order to pump the water out of the bucket.

NOTICE

The pump may generate a loud noise for the first 3-5 minutes of operation.

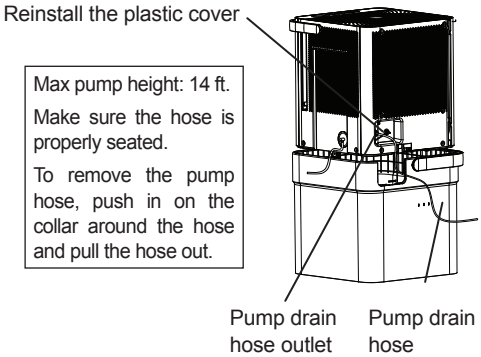

Fig. 10

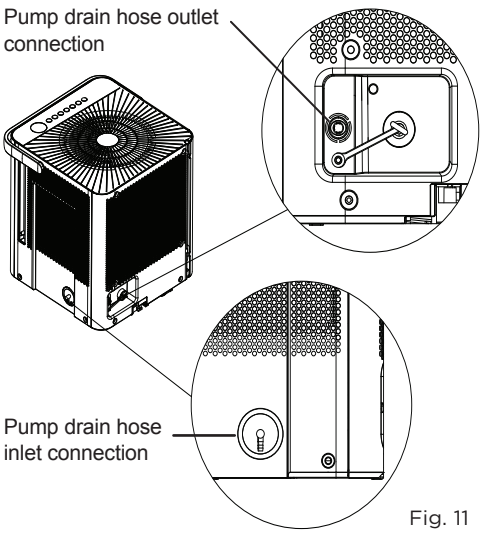

Fig. 11

- Make sure the hose is secure so there are no leaks.
- Direct the hose toward the drain, making sure that there are no kinks that will stop the water flowing.
- Place the end of the hose into the drain.
- Select the desired humidity setting and fan speed on the unit for pump draining to start.
- When operating in Bucketless mode the pump cannot be used.

NOTICE

The pump operation light blinks when a failure occurs. Please turn off the unit and disconnect the power cord. Check the following items:

- Cleaning the pump filter:
  - Clean the pump filter following the instructions below.
- Check if the drain hose is clean and free of debris.
- Empty the water from the bucket.
- Check the hose connection and the bucket for proper fitment. If the error persists, contact Customer Service.

NOTICE

If routing the drain hose outdoors, do not operate when the outdoor temperature is at or below 32°F (0°C) as the water will freeze, blocking the hose and causing the unit to stop.

Make sure to empty the bucket at least once a week a week when using the pump draining feature. When the pump draining feature is not being used, remove the pump drain hose from the outlet.

CARE AND CLEANING

Turn the dehumidifier off and disconnect the plug from the power source before cleaning.

1. Clean the Grill and Case

- Use water and a mild detergent. Do not use bleach or abrasives.
- Do not splash water directly onto the unit. Doing so may cause an electrical shock, cause the insulation to deteriorate, or cause the unit to rust.
- The air intake and outlet may get dirty during operation, use a vacuum cleaner or brush to clean.

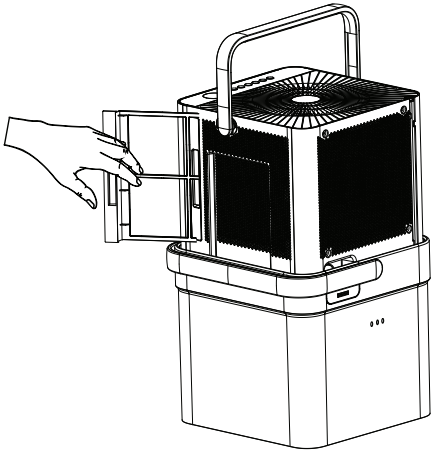

Fig. 12

2. Clean the bucket

- Every few weeks, clean the bucket thoroughly. Partially fill the bucket with clean water and mild detergent. Swish it around in the bucket, empty and rinse.

NOTICE

Do not use a dishwasher to clean the bucket.

3. Clean the air filters

- To remove the filters, pull each filter outwards.
- Wash the filters with clean water then dry.
- Re-install each filter.
- Reset the filter indicator light following operating instructions on page 9.

⚠ CAUTION

To avoid loss of performance or damage to the unit, do not operate the dehumidifier without the filters.

4. When not using the unit for long time periods

- Before storing the unit and bucket, let it rest for one full day so that the system can dry out naturally.
- Clean the unit, water bucket and air filters.
- Ensure the power cord is in the power cord storage channel.
- Nest the unit inside the bucket.
- Cover the unit with a plastic bag.
- Store the unit upright in a dry, well-ventilated area.

NESTING AND STORING INSTRUCTIONS

Step 1:

Power off and unplug the unit. Then lift the dehumidifier off the bucket.

Step 2:

Empty all water from bucket.

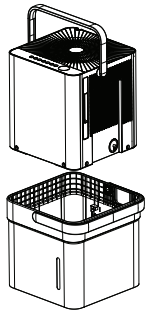

Fig. 13

⚠ WARNING

Make sure the bucket is empty before nesting the dehumidifier to avoid risk of electrical shock.

Step 3:

Make sure to press the tabs on the inside bucket feature in so that the unit can nest correctly. See Fig. 14.

Fig. 14

Step 4:

Rotate dehumidifier 90° in either direction and insert into bucket to nest.

NOTICE

Make sure the power cord is properly tucked into the power cord storage channel on the back of the dehumidifier to prevent damage.

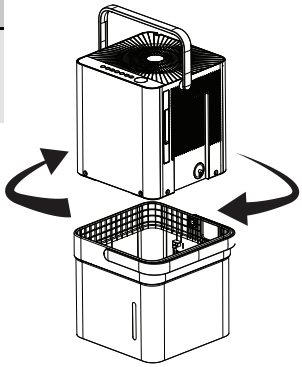

Fig. 15a

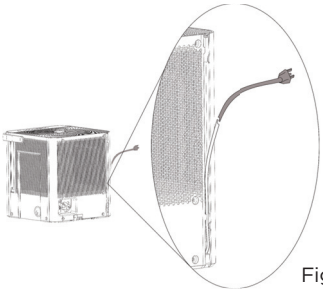

Fig. 15b

Step 5:

The dehumidifier is nested and ready to store.

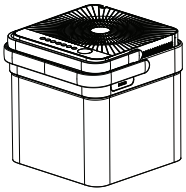

Fig. 16

⚠ CAUTION

When carrying the nested unit, be sure and use the bucket handle to ensure both the dehumidifier and bucket are safely carried.

TROUBLESHOOTING TIPS

Before calling for service, review this list. It may save you time and money. This list includes common occurrences that are not the result of defective workmanship or materials in this appliance.

Problem	Solution
Unit does not start	Make sure the dehumidifiers plug is connected firmly into the wall outlet.
	Check the house fuse/circuit breaker box.
	Dehumidifier has reached its preset level or bucket is full.
	Water bucket is not in the proper position.
Dehumidifier does not dry the air as it should	Not enough time to remove the moisture.
	Make sure there are no curtains, blinds or furniture blocking the front or back of the dehumidifier.
	The humidity control may not be set low enough.
	Check that all doors, windows and other openings are securely closed.
	Room temperature is too low, below 5°C (41°F).
	There is a water vapor source in the room.
The unit makes a loud noise when operating	Air filter may be dirty. Clean filter. Refer to Care and Cleaning section.
	The unit is tilted instead of upright as it should be.
	The floor surface is not level.
Frost appears on the coils	This is normal. The dehumidifier has Auto defrost feature.
Water on floor	Hose to connector or hose connection may be loose.
	Intended to use the bucket to collect water, but the back drain plug is removed.
ES, AS, P2, EC, Eb and E3 appear in the display	These are error codes and protection code. Check Operating Instructions.
The pump operation on light blinks at 1 Hz	Clean the pump filter.
	Check the pump hose is not blocked or leaking.
	Empty the water bucket.
When operating in bucketless mode, water collects around the bottom of the unit	Check to ensure the unit is level, and there is no debris on the surface.
	Check the drain hose connection and ensure it is properly seated in the outlet.

APP INSTRUCTIONS

DECLARATION OF CONFORMITY

We hereby declare that this Dehumidifier is in compliance with the essential requirements and other relevant provisions of Directive 1999/5/EC.

SPECIFICATION OF WIRELESS MODULE

Model: US-OSK103	**Dimensions:** 41 x 24 x 5 (mm)
Standard: IEEE 802.11 b/g/n	**Operation Temperature:** 0°C ~ 45°C / 32°F ~ 113°F.
Antenna Type: External omnidirectional Antenna	**Operation Humidity:** 10% ~ 85%
Frequency: 2.4 GHz (wireless)	**Power Input:** DC 5V/300 mA
Maximum Transmitted Power: 19.8 dBm Max	

PRECAUTIONS

1. Supports operating systems: iOS 7+ or Android 4+.
2. In the event of a OS update, there may be a delay between the update of the OS and a related software update during which your OS may or may not be supported until a new version is released. Your specific mobile phone or problems in your network may prevent the system from working and Midea will not be responsible for any problems that could be caused by incompatibility or network issues.
3. This Smart Dehumidifier only supports WPA-PSK/WPA2-PSK (recommended) encryption.
4. To ensure proper scanning of the QR code, your smart phone must have at least a 5-megapixel camera.
5. Due to unstable network connectivity, requests may time out. If this happens, re-run the network configuration.
6. Due to unstable network connectivity, commands may time out. If this happens, the smartphone app and the actual product may display conflicting information. The information displayed on the actual product is always the most accurate available. Refresh the app to re-sync.

NOTICE

Midea will not be responsible for any problems that could be caused by incompatibility or network issues, your wireless router and mobile phone.

SYSTEM OVERVIEW

Devices required to use the Smart Dehumidifier:

1. Smart Phone with compatible iOS or Android system.
2. Wireless Router
3. Smart Dehumidifier

DOWNLOAD AND INSTALL THE APP

Android QR code

Apple QR code

Scan to download app.

- You can also go to Google Play or App Store and search for Midea Air.

NOTICE

All the images in this manual are for reference only, your product and app may look slightly different. The actual product and app instructions have to be considered.

CREATE YOUR ACCOUNT

- Make sure your smartphone is connected to your wireless router and your wireless router has a working 2.4GHz internet connection.
- It is recommended to activate your account immediately to be able to recover your password by email.

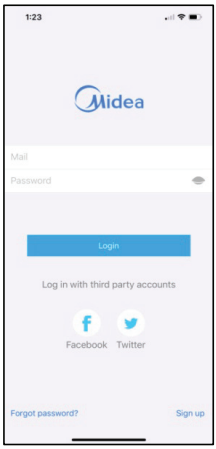

1. Press “Sign Up”.

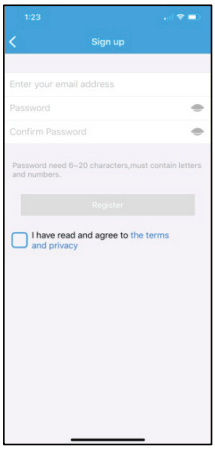

2. Enter your email address and password.

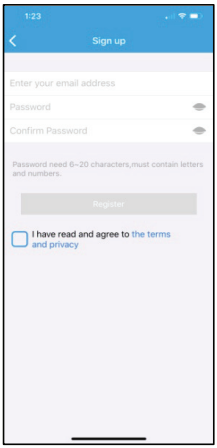

3. Press “Registration”.

4. If you forget your password, press “Forgot password?” on the main menu and enter your email address. Then press “Reset Password”.

NOTICE

- Make sure your smartphone is able to connect to the wireless network which will be used.
- Make sure also that the device is not connecting to other networks in range.

ADDITIONAL APP AND SMART HOME FUNCTIONS

For additional instructions regarding the features of the app and Smart Home skill capabilities, scan the QR code below.

Warranty

Dehumidifier Limited Warranty

Your product is protected by this Limited Warranty:

Warranty service must be obtained from Midea Consumer Services or an authorized Midea servicer.

Warranty

- One year limited warranty from original purchase date.

Midea, through its authorized servicers will:

- Pay all costs for reparing or replacing parts of this appliance which prove to be defective in materials or workmanship.

Consumer will be responsible for:

- Diagnostics, removal, transportation and reinstallation cost required because of service.
- Costs of service calls that are a result of items listed under NORMAL RESPONSABILITIES OF THE CONSUMER**

Midea replacement parts shall be used and will be warranted only for the original warranty.

NORMAL RESPONSABILITIES OF THE CONSUMER**

This warranty applies only to products in ordinary household use, and the consumer is responsible for the items listed below:

1. Proper use of the appliance in acordance with instructions provided with the product.
2. Routine maintenance and cleaning necessary to keep the good working condition.
3. Proper installation by an authorized service professional in accordance with instructions provided with the appliance and in accordance with all local plumbing, electrical and/or gas codes.
4. Proper connection to a grouded power supply of sufficient voltage, replacement of blown fuses, repair of loosen connections or defects in house wiring.
5. Expenses for making the appliance accessible for servicing.
6. Damages to finish after intallation.

EXCLUSIONS

This warranty does not cover the following:

1) Failure caused by damage to the unit while in your possesion (other than damage caused by defect or malfunction), by its improper installation, or by unreasonable use of the unit, including without limitation, failure to provide reasonable and necessary maintenance or to follow the written installation and Operating Instructions.
2) Damages caused by services performed by persons other than authorized Midea costumer service; or external causes such as abuse, misuse, inadequate power supply or acts of God.
3) If the unit is put to commercial, business, rental, or other use or application other than for consumer use, we make no warranties, express or implied, including but not limited to, any implied warranty of merchantability or fitness for use or purpose.
4) Products without original serial numbers or products that have serial numbers which have been altered or cannot be readily determined.

NOTE: Some states do not allow the exclusions or limitation of incidental or consequential damages. So this limitation or exclusion may not apply to you.

IF YOU NEED SERVICE

Keep your bill of sale, delivery slip, or some other appropriate payment Record.

The date on the bill establishes the warranty period, should service be required.

If service is performed, its your best interest to obtain and keep all receipts.

This written warranty gives you specific legal rights. You may also have other rights that vary from state to state.

Service under this warranty must be obtained by following these steps, in order:

1) Contact Midea Consumer Services or an authorized Midea services at 1 866 646 4332.
2) If there is a question as to where to obtain service, contact our consumer relations Departament.

Midea

make yourself at home

en

USER MANUAL

Dehumidifier

MAD

Rated voltage: 115V
Frequency: 60Hz

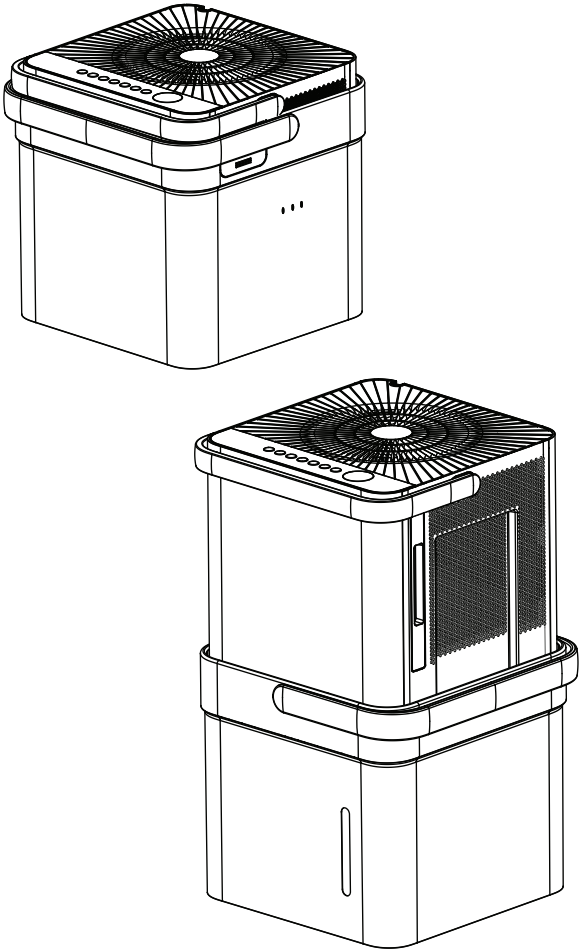

Warning notices: Before using this product, please read this manual carefully and keep it for future reference.

The design and specifications are subject to change without prior notice for product improvement.

MAD20S1QWT
MAD35S1QWT
MAD50S1QWT
MAD50PS1QWT
MAD50PS1QGR

www.midea.com

1 Safety Precautions 3
2 Unit Specifications and Features 6
3 Set Up Instructions 7
4 Installation Instructions 8
5 Operating Instructions 9
6 Care and Cleaning 15
7 Nesting and Storing Instructions 16
8 Troubleshooting Tips 17
9 App Instructions 18

Read This Manual

Inside you will find many helpful hints on how to use and maintain your Dehumidifier properly. A little preventive care on your part can save you a great deal of time and money over the life of your Dehumidifier. You'll find many answers to common problems in the troubleshooting tips - you should be able to fix most of them quickly before calling service. These instructions may not cover every possible condition of use, so common sense and care for safety is required when installing, operating and maintaining this product.

CAUTION

- For support, please call the Service Center at 1-866-646-4332.
- This appliance is not intended for use by people (including children) with reduced physical, sensory, or mental capabilities or lack of experience and knowledge, unless they have been given supervision or instruction concerning use of the appliance by a person responsible for their safety.
- Children should be supervised to ensure that they do not play with the appliance.
- The appliance shall be installed in accordance with National wiring regulations and local electrical codes.

NOTICE

All the pictures in this manual are for illustrative purposes only. The actual shape of the dehumidifier you purchased may be slightly different, but its operations and functions are similar.

SAFETY PRECAUTIONS

To prevent injury to the user or personal and property damage, these instructions must be followed. Incorrect operation due to ignoring of instructions may cause harm or damage. The level of risk is shown by the following indications.

⚠ WARNING **This symbol indicates a hazardous situation which, if not avoided, could result in death or serious injury.**

⚠ CAUTION **This symbol indicates a hazardous situation, which, if not avoided, could result in minor or moderate injury.**

NOTICE **This symbol addresses practices not related to physical injury.**

⚠ WARNING

- Do not modify power cord length or share the outlet with other appliances.
  It may cause electric shock or fire due to overheating.
- Do not operate or stop the unit by inserting or pulling out the power plug.
  It may cause electric shock.
- Do not allow water to enter into electric parts.
  It may cause failure or electric shock.
- Do not use the power outlet if it is loose or damaged.
  It may cause fire and electric shock.
- Do not use or keep the power cord close to heating appliances or heat sources such as fireplaces.
  It may cause fire and electric shock.
- Do not disassemble or modify unit.
  It may cause failure and electric shock.
- Do not damage or use an unspecified power cord.
  It may cause fire and electric shock.
- Do not use the unit near flammable gas or combustibles, such as gasoline, benzene, thinner, etc.
  It may cause fire.
- Do not operate with wet hands.
  It may cause electric shock.
- Do not open the unit during operation.
  It may cause electric shock.
- Do not drink the water from the bucket.
- Do not use the unit in small spaces or place in a sink or shower.
  Lack of ventilation can cause overheating and fire.
- Do not attempt to repair the unit yourself.

⚠ WARNING

- Avoid fire hazard or electric shock.
  Do not use an extension cord or an adaptor plug. Do not remove any prongs from the power cord.
- Plug in power plug properly.
  Otherwise, it may cause electric shock or fire due to excess heat generation.
- Always ensure effective grounding.
  Incorrect grounding may cause electric shock.
- Unplug the unit if strange sounds, smells, or smoke come from it.
  A damaged product may cause fire and electric shock.
- Ventilate room before operating the unit if there is a gas leak from other appliances.
- If the power cord is damaged, it must be replaced by the manufacturer or an authorized service center in order to avoid electrical risk.
- Before cleaning, turn off the power and unplug the unit.
- Be sure the dehumidifier has been securely and correctly installed according to the installation instructions in this manual. Save this manual for possible future use in removing or installing this unit.
- Be sure the dehumidifier is properly grounded. To minimize shock and fire hazards, proper grounding is important.
  The power cord is equipped with a three-prong grounding plug for protection against shock hazards.
- Your dehumidifier must be used in a properly grounded wall receptacle. If the wall receptacle you intend to use is not adequately grounded or protected by a time delay fuse or circuit breaker, have a qualified electrician install the proper receptacle. Ensure the receptacle is accessible after the unit installation.
- Be sure the electrical service is adequate for the model you have chosen. This information can be found on the serial plate, which is located on the side of the cabinet and behind the grille.
- Make sure the bucket is empty of water before nesting unit.
  It could cause electric shock and/or damage the unit.
- Unplug the unit before nesting it in the bucket.
  It could cause electric shock and/or damage the unit.
- When unplugging the unit, be sure to grab the plug, not the cord.

⚠ CAUTION

- Do not use in places where water may splash onto the unit.
  Water may enter the unit and degrade the insulation. It may cause an electric shock or fire.
- Place the unit on a level, sturdy section of the floor.
  If the unit falls over, it may cause water to spill and damage belongings, or cause electrical shock or fire.
- Never insert your finger or other foreign objects into grills or openings. Take special care to warn children of these dangers.
  It may cause failure or electric shock.
- Do not climb up on or sit on the unit.
  You may be injured if you fall or if the unit falls over.
- Always insert the filters securely, and take caution to avoid injuries to hand and fingers. Clean filter once every two weeks.
- If water enters the unit, turn the unit off and disconnect the power, contact the Service Center at 1-866-646-4332.
- If the unit is knocked over during use, turn off the unit and unplug it from the main power supply immediately. Visually inspect the unit to ensure there is no damage. If you suspect the unit has been damaged, contact customer service.
- In a thunderstorm, the power should be disconnected to the unit due to lightning.
- Do not run power cord under carpeting. Do not cover cord with throw rugs, runners, or similar coverings. Do not route cord under furniture or appliances. Arrange cord away from traffic area and where it will not be tripped over.
- Do not place anything on top of the unit.
  This would restrict airflow, possibly damage the unit and decrease performance.
- Always lift unit with 2 hands using proper lifting technique.
- Before turning the unit on, make sure it is seated correctly on the bucket.
- Before lifting ensure the handle is properly attached.
- Only use the bucket that came with the unit. Do not use any other bucket.
- Clean the bucket regularly.

UNIT SPECIFICATIONS AND FEATURES

Product overview

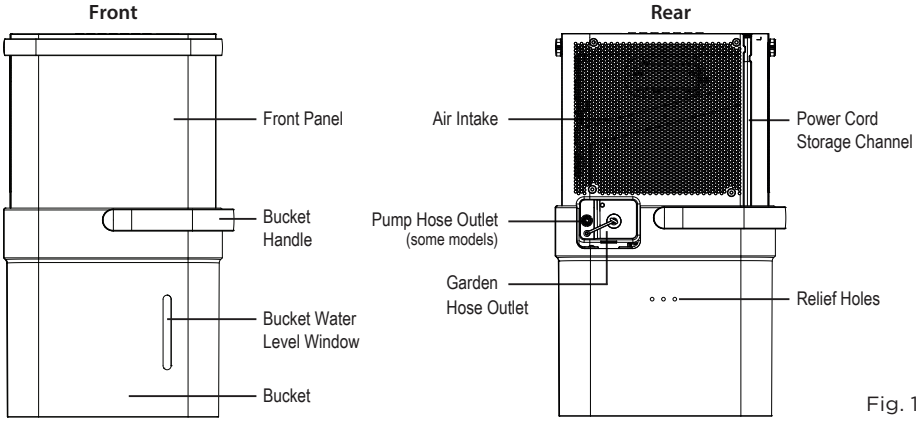

Fig. 1

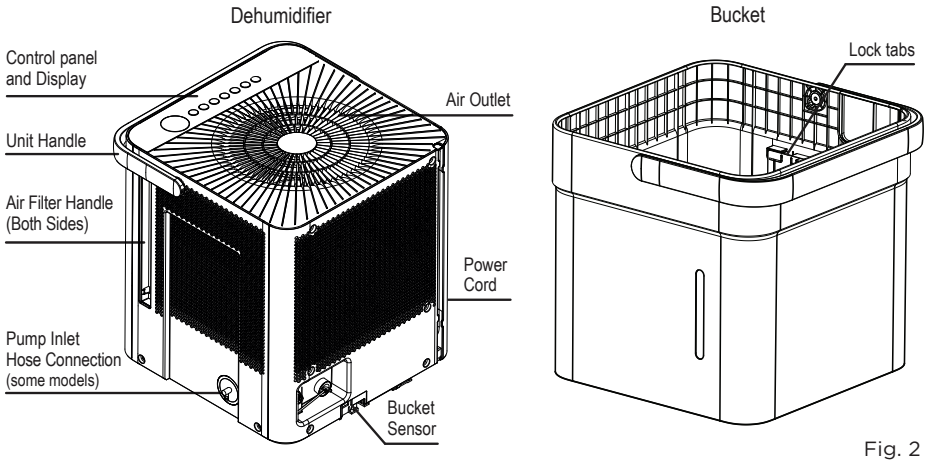

Fig. 2

Accessories

Pump drain hose (only for units with the drain pump feature)	
Pump inlet hose (only for units with the drain pump feature)	
Normal drain hose	

SET UP INSTRUCTIONS

Step 1:

Separate dehumidifier & bucket from the nested shipping/storage position.

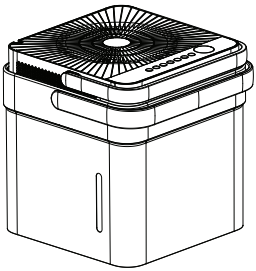

Fig. 3a

Nested Shipping & Storage Position

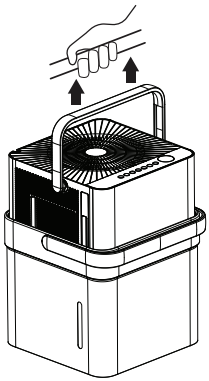

Fig. 3b

Step 2:

Rotate dehumidifier 90° and align the arrows on the two labels (one on the bucket and one on the dehumidifier) and carefully sit the dehumidifier down onto the bucket. The water level window in the bucket and the user interface buttons on the dehumidifier should be on the same side when properly stacked. Check to ensure the arrows on the unit and bucket are aligned as in Fig. 4c for proper operation.

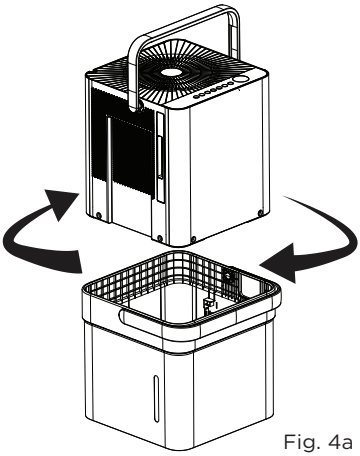

Fig. 4a

Rotate dehumidifier 90°

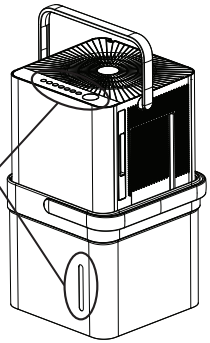

Fig. 4b

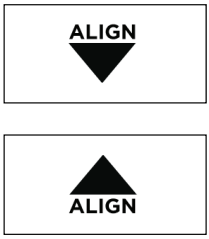

Fig. 4c

Step 3:

Plug the unit in and press the power button and the unit is ready to run in normal (bucket) mode.

INSTALLATION INSTRUCTIONS

Positioning the Unit

The dehumidifier should be placed in the area where dehumidification is desired most. Adjacent rooms in which dehumidification is also desired should allow adequate airflow in and out of the space containing the dehumidifier.

- Do not use outdoors.
- This dehumidifer is intended for indoor residential applications only. This dehumidifier should not be used for commercial or industrial applications.
- Place the dehumidifier on a smooth, level floor strong enough to support the unit with a full bucket of water.
- Allow at least 8” of air space on all sides of the unit for air circulation (at least 16” for air outlet).
- Place the unit in an area where the temperature will not fall below 41°F (5°C). The coils can become covered with frost at at lower temperatures, which may reduce performance.
- Place the unit away from any clothes dryer, heater or radiator.
- Close all doors, windows, and other openings to the outdoors in the room.

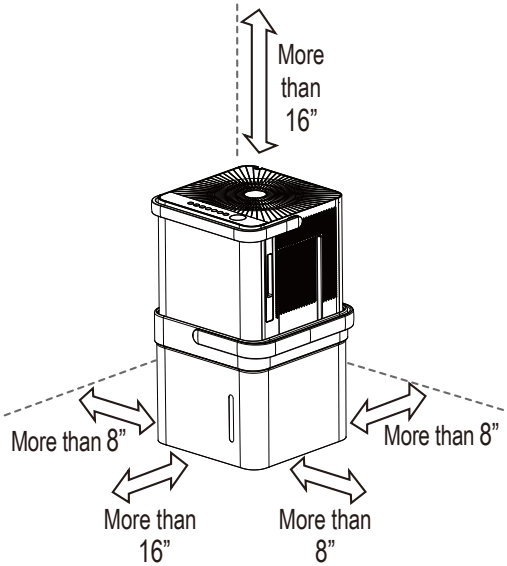

Fig. 5

Additional Setup and Usage Information

Scan this QR code with your mobile device to see a playlist of helpful videos about your new Cube Dehumidifier.

OPERATING INSTRUCTIONS

Key Pad Features

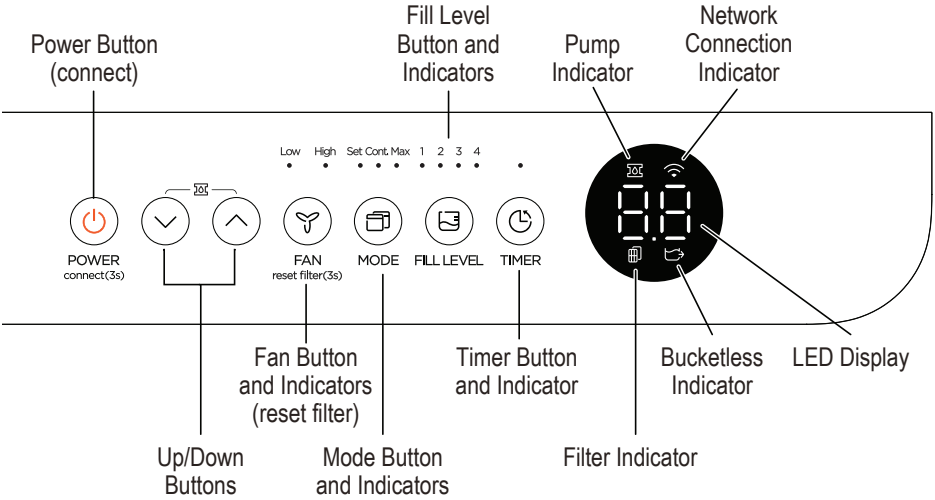

NOTICE

The appearance of the control panel on your unit may vary slightly. Functions will be similar.

Operating Instructions

When you push the button to change operation modes, the unit will make a beep sound to indicate that it is changing modes.

Power Button:

Press this button to turn the unit On/Off.

Connect:

Holding the power button for 3 seconds will place the unit in network connection mode to setup wireless control.

Up/Down Buttons:

Press these buttons to adjust the setpoint or to set the timer feature. Holding the Up and Down buttons for 3 seconds will activate pump mode if the bucket is in place (some models).

Fan Button:

Press this button to change the fan speed between High and Low.

Filter Reset:

To reset the change filter indicator, hold the fan button for 3 seconds.

Mode Button:

Press this button to change the mode of the dehumidifier between Set mode, Max mode, and Continuous run mode.

Set – The dehumidifier runs until the humidity setpoint has been reached. The dehumidifier will begin running once the humidity rises above the setpoint again.

Max – The dehumidifier will run continuously on High Fan.

Continuous – The dehumidifier will run continuously and the fan speed can be changed in this operating mode.

NOTICE

While operating on continuous and Max modes, the humidity setpoint cannot be adjusted manually.

Fill Level Button:

Press this button to change the required water level before the bucket full switch activates. The options will fill approximately to the amounts shown in the table below:

Fill level	Models MAD20S1QWT	Models MAD35S1QWT MAD50S1QWT MAD50PS1QWT MAD50PS1QGR
1	1.5 gallons (17 lb)	2.25 gallons (24 lb)
2	2 gallons (21 lb)	3 gallons (30 lb)
3	2.75 gallons (27.5 lb)	3.75 gallons (36.5 lb)
4	3 gallons (29.5 lb)	4.25 gallons (40.5 lb)

Choose the option which is most comfortable for you when emptying the bucket.

When the bucket is full, the Display will show P2.

The weights above are approximate weights of the bucket when filled with the corresponding volume of water.

NOTICE

For accurate fill levels, ensure the bucket is empty before beginning operation.

Timer Button:

Press this button to activate the Timer function. The Timer LED will illuminate indicating timer mode is being set. 0.0 will also appear on the display indicating the number of hours from now until the timer function will initiate. When the timer function initiates, the unit will change its power state. For more information see Timer function under other features on the next page.

Bucketless mode:

Bucketless mode allows you to run the unit without the bucket in place. The included drain hose or a garden hose must be attached for proper bucketless mode operation. To activate bucketless mode, the following steps must be completed within three minutes of plugging the dehumidifier in.

1. Press and hold the up and fill level buttons for 3 seconds until the bucketless icon appears on the display.
2. Ensure the dehumidifier is on flat level ground (free of debris).
3. Make sure the hose for bucketless mode does not rise above the connection point on the unit.
4. Attempting to change the unit into bucketless mode while it is sitting on the bucket will have no effect.

To remove the unit from bucketless mode, place the unit back on the bucket.

Error Codes and Protection Code:

EH60 - Room temperature r sensor error--Unplug the unit and plug it back in. If error repeats, call for service.

EH61 - Tube Temperature sensor of the evaporator error-- Unplug the unit and plug it back in. If error repeats, call for service.

EH0b - Display board and master control board communication error.Unplug the unit and plug it back in. If error repeats, call for service.

P2 - Bucket has reached the set Fill Level– Empty the bucket and place the unit on the bucket properly.

Eb - Bucket is removed or not in right position - Replace the bucket in the right position. (only available for the unit with pump feature.)

Other Features

Auto Defrost

When frost builds up on the evaporator coils, the compressor will cycle off and Auto Defrost function will run automatically.

3 minute compressor operation delay protection

After the unit has stopped, it can not be restarted in the first 3 minutes to protect compressor operation. The unit will restart automatically after 3 minutes.

Auto-Restart

If the unit stops unexpectedly due to power being cut, it will restart with the previous function setting (except bucketless mode) automatically when the power resumes.

Timer Function

- When activating the Timer function, you are setting the time until the unit changes its power state. This means, if the unit is on, activating the timer function will set the time until the unit will turn off. If the unit is off, activating the timer function will set the time until the unit will turn on.
- The time can be set after pressing the timer button then using the up or down buttons. These buttons will change the time in 0.5 hour increments up to 10 hours. After 10 hours, the time will change in 1 hour increments up to 24.
- If an error code appears during this time, the timer function will be cancelled.

NOTICE

- When first using the dehumidifier, operate the unit continuously 24 hours. Make sure the plastic cover on the continuous drain hose outlet is installed properly so there are no leaks.
- This unit is designed to operate in a working environment between 5°C/41°F and 35°C/95°F.
- Make sure the water bucket is positioned correctly so that the unit can operate properly. When the water in the bucket reaches a certain level, please be careful while moving the unit to avoid spilling.

Removing Collected Water

There are three ways to remove collected water:

1. Emptying the bucket

- When the bucket reaches the set Fill Level, the unit's display will show P2 regardless of power status.
- Using proper lifting techniques, remove the unit from the bucket. Be aware, some residual water may spill from the bottom of the unit while not on the bucket.
- Using two hands, grab the bucket handle and carry it to the desired drainage point. Pouring from a front corner of the bucket (the bucket window is on the front side), empty the bucket. If pouring from the back of the bucket, some water may spill from the relief holes.
- Return the bucket to the desired operating location and place the unit back on the bucket. Be sure the unit is aligned properly.

1. Lift the unit off the bucket and place it on a level surface.

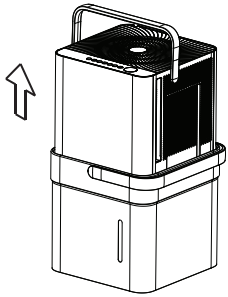

2. Lift the bucket using 2 hands and carry to drainage point.

Fig. 6

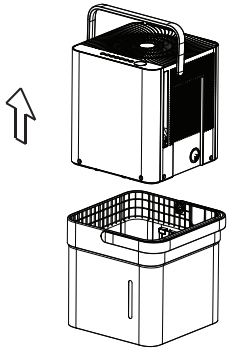

3. Pour out all of the water.

Fig. 7

NOTICE

- When you remove the unit from the bucket do not set the unit on any electrical components as the bottom may be wet.
- Do not set the unit on an uneven surface after removing it from the bucket.
- Ensure the unit is seated properly after returning it to the bucket.
- If the unit is removed from the bucket during operation, the display will show the error code Eb and cease operation until returned to the bucket or changed to bucketless mode.

2. Continuous draining

- Water can be automatically emptied from the unit into a sink, or other type of drain using the included hose.
- To install the hose, remove the drain cap from the rear of the unit and set aside. Insert the included drain hose, or attach a garden hose to the drain outlet. Place the other end of the hose on or near the drain so that water will drain properly.

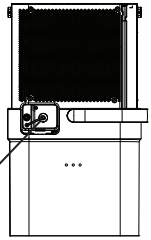

Fig. 8

- When removing the drain hose, some water may remain in the hose or the drain outlet. Be sure this water will not spill by drying the wet area before moving the unit.

NOTICE

When using the continuous draining feature, ensure the unit is placed above the sink or drain being used. This will ensure proper draining.

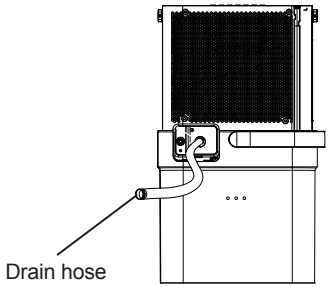

Fig. 9

3. Pump draining (some models)

- Water can be pumped from the unit into a sink or other type of drain by putting the unit in pump mode and attaching the included pump hose. Be sure to install both the inlet and outlet pump hoses as shown in the figures on the right.
- To install the pump hose, remove the plug from the pump drain hole and firmly attach the the included pump hose as shown in Fig. 10.
- Initiate pump mode by holding both the up and down arrows for three seconds.
- The pump inlet hose must be placed in the bucket in order to pump the water out of the bucket.

NOTICE

The pump may generate a loud noise for the first 3-5 minutes of operation.

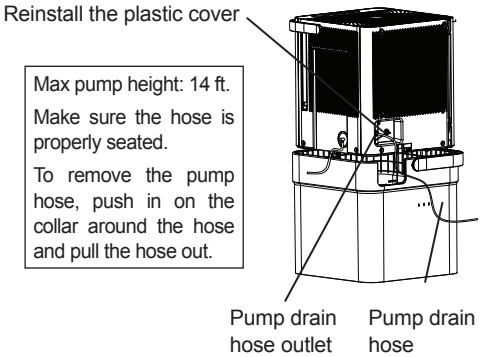

Fig. 10

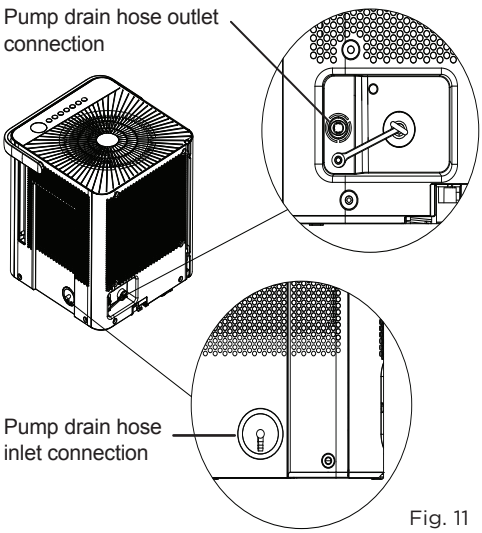

Fig. 11

- Make sure the hose is secure so there are no leaks.
- Direct the hose toward the drain, making sure that there are no kinks that will stop the water flowing.
- Place the end of the hose into the drain.
- Select the desired humidity setting and fan speed on the unit for pump draining to start.
- When operating in Bucketless mode the pump cannot be used.

NOTICE

The pump operation light blinks when a failure occurs. Please turn off the unit and disconnect the power cord. Check the following items:

- Cleaning the pump filter:
  - Clean the pump filter following the instructions below.
- Check if the drain hose is clean and free of debris.
- Empty the water from the bucket.
- Check the hose connection and the bucket for proper fitment. If the error persists, contact Customer Service.

NOTICE

If routing the drain hose outdoors, do not operate when the outdoor temperature is at or below 32°F (0°C) as the water will freeze, blocking the hose and causing the unit to stop.

Make sure to empty the bucket at least once a week a week when using the pump draining feature. When the pump draining feature is not being used, remove the pump drain hose from the outlet.

CARE AND CLEANING

Turn the dehumidifier off and disconnect the plug from the power source before cleaning.

1. Clean the Grill and Case

- Use water and a mild detergent. Do not use bleach or abrasives.
- Do not splash water directly onto the unit. Doing so may cause an electrical shock, cause the insulation to deteriorate, or cause the unit to rust.
- The air intake and outlet may get dirty during operation, use a vacuum cleaner or brush to clean.

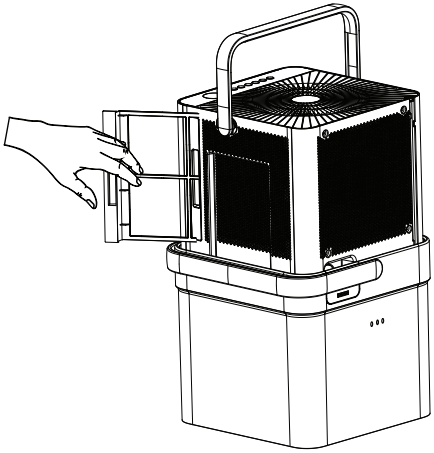

Fig. 12

2. Clean the bucket

- Every few weeks, clean the bucket thoroughly. Partially fill the bucket with clean water and mild detergent. Swish it around in the bucket, empty and rinse.

NOTICE

Do not use a dishwasher to clean the bucket.

3. Clean the air filters

- To remove the filters, pull each filter outwards.
- Wash the filters with clean water then dry.
- Re-install each filter.
- Reset the filter indicator light following operating instructions on page 9.

⚠ CAUTION

To avoid loss of performance or damage to the unit, do not operate the dehumidifier without the filters.

4. When not using the unit for long time periods

- Before storing the unit and bucket, let it rest for one full day so that the system can dry out naturally.
- Clean the unit, water bucket and air filters.
- Ensure the power cord is in the power cord storage channel.
- Nest the unit inside the bucket.
- Cover the unit with a plastic bag.
- Store the unit upright in a dry, well-ventilated area.

NESTING AND STORING INSTRUCTIONS

Step 1:

Power off and unplug the unit. Then lift the dehumidifier off the bucket.

Step 2:

Empty all water from bucket.

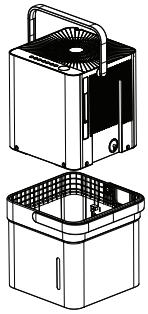

Fig. 13

⚠ WARNING

Make sure the bucket is empty before nesting the dehumidifier to avoid risk of electrical shock.

Step 3:

Make sure to press the tabs on the inside bucket feature in so that the unit can nest correctly. See Fig. 14.

Fig. 14

Step 4:

Rotate dehumidifier 90° in either direction and insert into bucket to nest.

NOTICE

Make sure the power cord is properly tucked into the power cord storage channel on the back of the dehumidifier to prevent damage.

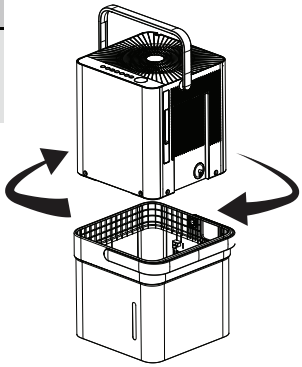

Fig. 15a

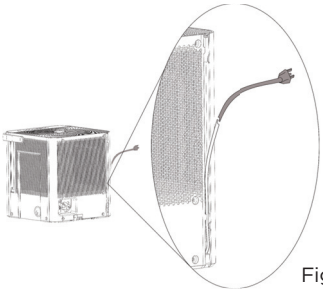

Fig. 15b

Step 5:

The dehumidifier is nested and ready to store.

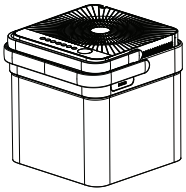

Fig. 16

⚠ CAUTION

When carrying the nested unit, be sure and use the bucket handle to ensure both the dehumidifier and bucket are safely carried.

TROUBLESHOOTING TIPS

Before calling for service, review this list. It may save you time and money. This list includes common occurrences that are not the result of defective workmanship or materials in this appliance.

Problem	Solution
Unit does not start	Make sure the dehumidifiers plug is connected firmly into the wall outlet.
	Check the house fuse/circuit breaker box.
	Dehumidifier has reached its preset level or bucket is full.
	Water bucket is not in the proper position.
Dehumidifier does not dry the air as it should	Not enough time to remove the moisture.
	Make sure there are no curtains, blinds or furniture blocking the front or back of the dehumidifier.
	The humidity control may not be set low enough.
	Check that all doors, windows and other openings are securely closed.
	Room temperature is too low, below 5°C (41°F).
	There is a water vapor source in the room.
The unit makes a loud noise when operating	Air filter may be dirty. Clean filter. Refer to Care and Cleaning section.
	The unit is tilted instead of upright as it should be.
	The floor surface is not level.
Frost appears on the coils	This is normal. The dehumidifier has Auto defrost feature.
Water on floor	Hose to connector or hose connection may be loose.
	Intended to use the bucket to collect water, but the back drain plug is removed.
ES, AS, P2, EC, Eb and E3 appear in the display	These are error codes and protection code. Check Operating Instructions.
The pump operation on light blinks at 1 Hz	Clean the pump filter.
	Check the pump hose is not blocked or leaking.
	Empty the water bucket.
When operating in bucketless mode, water collects around the bottom of the unit	Check to ensure the unit is level, and there is no debris on the surface.
	Check the drain hose connection and ensure it is properly seated in the outlet.

APP INSTRUCTIONS

DECLARATION OF CONFORMITY

We hereby declare that this Dehumidifier is in compliance with the essential requirements and other relevant provisions of Directive 1999/5/EC.

SPECIFICATION OF WIRELESS MODULE

Model: US-OSK103	**Dimensions:** 41 x 24 x 5 (mm)
Standard: IEEE 802.11 b/g/n	**Operation Temperature:** 0°C ~ 45°C / 32°F ~ 113°F.
Antenna Type: External omnidirectional Antenna	**Operation Humidity:** 10% ~ 85%
Frequency: 2.4 GHz (wireless)	**Power Input:** DC 5V/300 mA
Maximum Transmitted Power: 19.8 dBm Max	

PRECAUTIONS

1. Supports operating systems: iOS 7+ or Android 4+.
2. In the event of a OS update, there may be a delay between the update of the OS and a related software update during which your OS may or may not be supported until a new version is released. Your specific mobile phone or problems in your network may prevent the system from working and Midea will not be responsible for any problems that could be caused by incompatibility or network issues.
3. This Smart Dehumidifier only supports WPA-PSK/WPA2-PSK (recommended) encryption.
4. To ensure proper scanning of the QR code, your smart phone must have at least a 5-megapixel camera.
5. Due to unstable network connectivity, requests may time out. If this happens, re-run the network configuration.
6. Due to unstable network connectivity, commands may time out. If this happens, the smartphone app and the actual product may display conflicting information. The information displayed on the actual product is always the most accurate available. Refresh the app to re-sync.

NOTICE

Midea will not be responsible for any problems that could be caused by incompatibility or network issues, your wireless router and mobile phone.

SYSTEM OVERVIEW

Devices required to use the Smart Dehumidifier:

1. Smart Phone with compatible iOS or Android system.
2. Wireless Router
3. Smart Dehumidifier

DOWNLOAD AND INSTALL THE APP

Android QR code

Apple QR code

Scan to download app.

- You can also go to Google Play or App Store and search for Midea Air.

NOTICE

All the images in this manual are for reference only, your product and app may look slightly different. The actual product and app instructions have to be considered.

CREATE YOUR ACCOUNT

- Make sure your smartphone is connected to your wireless router and your wireless router has a working 2.4GHz internet connection.
- It is recommended to activate your account immediately to be able to recover your password by email.

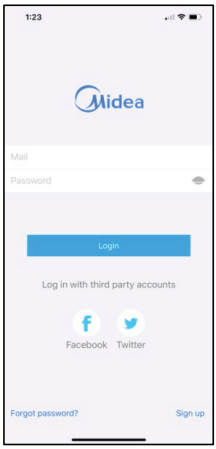

1. Press “Sign Up”.

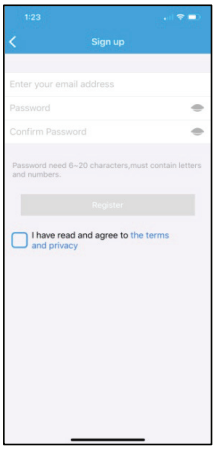

2. Enter your email address and password.

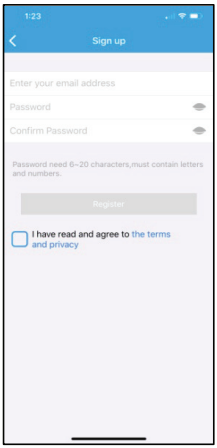

3. Press “Registration”.

4. If you forget your password, press “Forgot password?” on the main menu and enter your email address. Then press “Reset Password”.

NOTICE

- Make sure your smartphone is able to connect to the wireless network which will be used.
- Make sure also that the device is not connecting to other networks in range.

ADDITIONAL APP AND SMART HOME FUNCTIONS

For additional instructions regarding the features of the app and Smart Home skill capabilities, scan the QR code below.

Warranty

Dehumidifier Limited Warranty

Your product is protected by this Limited Warranty:

Warranty service must be obtained from Midea Consumer Services or an authorized Midea servicer.

Warranty

- One year limited warranty from original purchase date.

Midea, through its authorized servicers will:

- Pay all costs for reparing or replacing parts of this appliance which prove to be defective in materials or workmanship.

Consumer will be responsible for:

- Diagnostics, removal, transportation and reinstallation cost required because of service.
- Costs of service calls that are a result of items listed under NORMAL RESPONSABILITIES OF THE CONSUMER**

Midea replacement parts shall be used and will be warranted only for the original warranty.

NORMAL RESPONSABILITIES OF THE CONSUMER**

This warranty applies only to products in ordinary household use, and the consumer is responsible for the items listed below:

1. Proper use of the appliance in acordance with instructions provided with the product.
2. Routine maintenance and cleaning necessary to keep the good working condition.
3. Proper installation by an authorized service professional in accordance with instructions provided with the appliance and in accordance with all local plumbing, electrical and/or gas codes.
4. Proper connection to a grouded power supply of sufficient voltage, replacement of blown fuses, repair of loosen connections or defects in house wiring.
5. Expenses for making the appliance accessible for servicing.
6. Damages to finish after intallation.

EXCLUSIONS

This warranty does not cover the following:

1) Failure caused by damage to the unit while in your possesion (other than damage caused by defect or malfunction), by its improper installation, or by unreasonable use of the unit, including without limitation, failure to provide reasonable and necessary maintenance or to follow the written installation and Operating Instructions.
2) Damages caused by services performed by persons other than authorized Midea costumer service; or external causes such as abuse, misuse, inadequate power supply or acts of God.
3) If the unit is put to commercial, business, rental, or other use or application other than for consumer use, we make no warranties, express or implied, including but not limited to, any implied warranty of merchantability or fitness for use or purpose.
4) Products without original serial numbers or products that have serial numbers which have been altered or cannot be readily determined.

NOTE: Some states do not allow the exclusions or limitation of incidental or consequential damages. So this limitation or exclusion may not apply to you.

IF YOU NEED SERVICE

Keep your bill of sale, delivery slip, or some other appropriate payment Record.

The date on the bill establishes the warranty period, should service be required.

If service is performed, its your best interest to obtain and keep all receipts.

This written warranty gives you specific legal rights. You may also have other rights that vary from state to state.

Service under this warranty must be obtained by following these steps, in order:

1) Contact Midea Consumer Services or an authorized Midea services at 1 866 646 4332.
2) If there is a question as to where to obtain service, contact our consumer relations Departament.

Midea

make yourself at home