carport

Product ID. QB6DM

Scan for Support
support@garvee.com

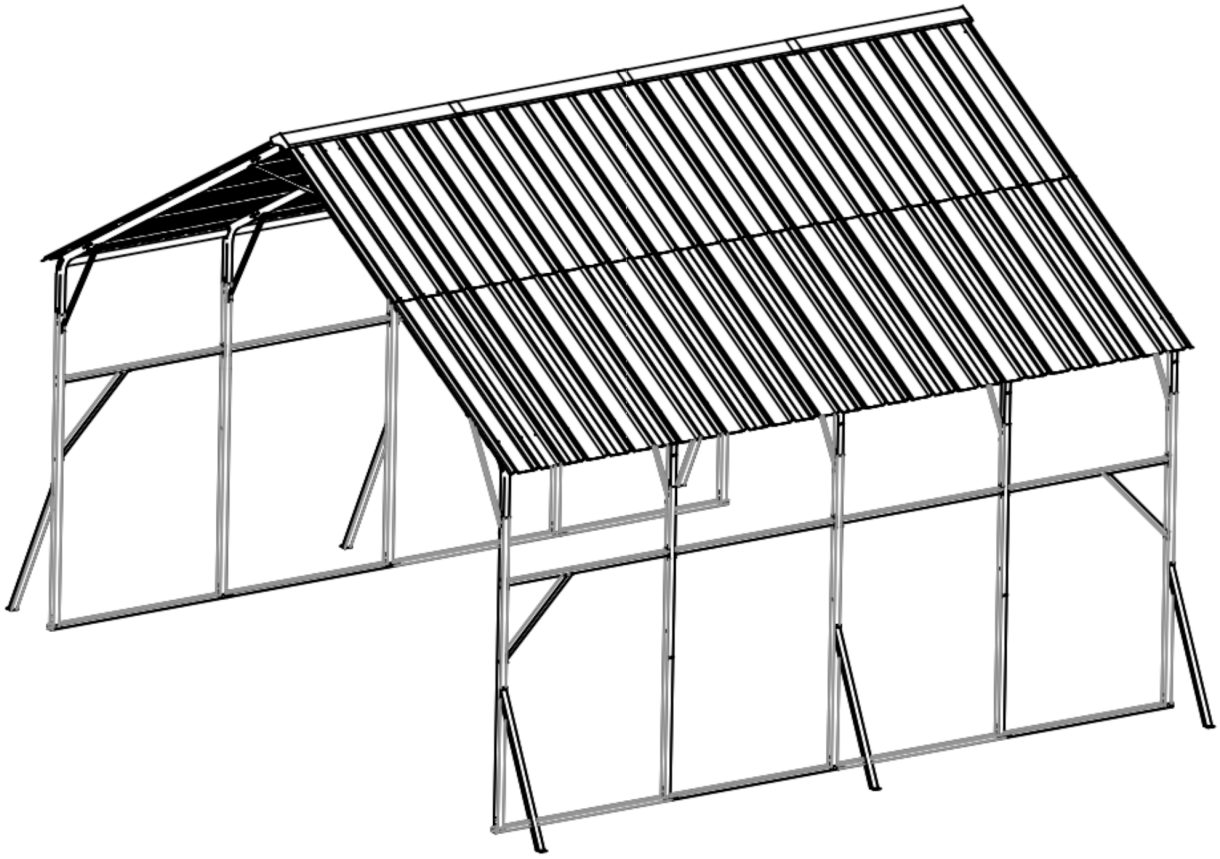

GARVEE.com

CONTENTS

01 HELP CENTER

02 WARNING

03 MATERIAL LIST

04 INSTALLATION STEPS

HELP CENTER

Question about your product? We're here to help. Visit us at:



Chat Support


Product Inquiry



Orders FAQ


Product Assembly


Returns & Refunds

We Stands Behind the Quality of Their Furniture

If you have any issues with your item please let us know! We will always do our best to come up with a solution that you will be happy with.Please get in touch with our customer service team before returning the product.And Please do not throw away the original box(es) if you have not finished assembling or comfirmed that there are no quality issues. Length of return period:

Items can be returned within 30 days of purchase.

In the meanwhile,everything you purchased from us comes with a one-year warranty.

Who is responsible for the retun shipping fee:

We will cover the return shipping fees if:

1. Your item has a manufacturing defect in its materials or workmanship.For example, tornwicker or misaligned screw holes.We will send you a prepaid shipping label after photos are sent.
2. Your item was damaged in transit.For example, glass is broken or wicker is damaged,We will send you a prepaid shipping label after photos are sent.
3. You receive the wrong box(es) due to a warehouse error. We will send you a prepaid shipping label after photos are sent of the wrong SKU numbers on the outer box(es).
4. One or more boxes are lost in transit. We will send you a prepaid shipping label if you no longer want the item.

* However, we still hope to work with you for a better solution instead of a retum. Please don't hesitate to contact our customer service team.

Customer will cover the return shipping fees if:

1. You don't like the product(s) after receiving the box(es).
2. You no longer need the product(s) but you have received the box(es),
3. You buy the product(s) by mistake but you have received the box(es).
4. Order/Shipment cancellation failed and you have received the box(es).

Return Request

In order to get a full refund as described in this return policy, all items must be:

(1) In a brandnew/unused condition, please provide photos before and after packaging.

(2) When returning, all accessories and parts are firmly packed in all original packaging. If your return does not meet the requirements, you may not get a full refund.
When will I be refunded?
The refund is released once the goods have been returned to our warehouse.
What if the product is damaged/defective outside of the valid return period?
We want you to be a happy customer. Please reach out to us by email and we will come up with a solution to make sure you are satisfied.

WARNING



1. Two or more people are required for assembly.
2. A ladder and electric drill may be necessary.
3. Do not erect the structure in heavy wind or inclement weather.
4. Do not leave up this unit for extended periods of time, as it is not a permanent structure or designed to withstand sustained wind or rain.It is a temporary, portable shelter that shields you from sunlight and rain. The screens also block flying insects.
5. Do not use candles, matches, or any open flame near the tent.
6. To better align the screws for practical situations, do not fully tighten screws initially.
7.Professional installation is highly recommended

- In case of windy weather, please do not stand in the gazebo.
- Please do not stand under the gazebo in case of heavy snowfall.
- For safety, please use expansion screw to reinforce the posts to the ground.
- In windy weather, please tighten the fence and netting to avoid tearing in high winds.
- In extreme weather condition, you can use a rope to pull the four corners of the gazebo to keep it stable.
- Please clear the snow off the roof in time for the heavy snowfall.
- Make sure all sciews are tightened before use.
- Check all screws, buckles and straps every 90 days.
- Please keep all screws loose during the assembly process and tighten them after completing the installation.
- Do not use or store next to a pole with open flame or flammable chemical.
- Please note that some parts have sharp edges and should be handled with gloves.
- If any parts are missing, broken, damaged or worn, stop using the product until repairs are made or factory replacement parts are installed.
- Installation of the product in a manner that does not conform to the manufaclur-er's may result in the loss of the warranty policy for this product.
- Consult your local authorities to check if permits are required to erect the shed.

MATERIAL LIST

BOX A

#2	Straight peak pole		10 PCS
#4	Top Reinforcing pole		15 PCS
#9	Short Top-pole		3 PCS

BOX B

#3	Leg pole		10 PCS
#9	Short Top-pole		1 PCS
#13	Top plate		4 PCS
#14	Below Reinforcing pole		1 PCS
#G1	M5X20 Self-Tapping screws		231 PCS
#G2	M6X20 Socket head bolt		346 PCS
#G3	Expansion screws		24 PCS
#G4	M6X70 Socket head bolt & Nut		65 PCS
#G5	M6X45 Socket head bolt & Nut		9 PCS
#G6	M6X60 Socket head bolt & Nut		9 PCS
#M	Glove	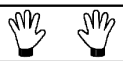	2 PCS

BOX C

#1	Top Side-pole		12 PCS
#5	Ground bar 1		2 PCS
#5a	Ground bar 2		6 PCS
#15	Below Side-pole		8 PCS

MATERIAL LIST

BOX D

#7	Ground Reinforcing pole		6 PCS
#9	Short Top-pole		16 PCS
#11	Long Top-pole		20 PCS

BOX E

#0	Connector		15 PCS
#8	Side triangle plate		2 PCS
#10	Side plate		4 PCS
#12	Support		12 PCS
#14	Below Reinforcing pole		3 PCS
#Y2	Anti-cut Tape		16 m

BOX F

#R	Short Roof cover		20 PCS

BOX G

#L	Long Roof cover		20 PCS

BOX H

#R	Short Roof cover		10 PCS
#L	Long Roof cover		10 PCS

Tools Required

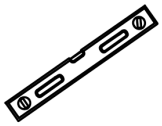			
LEVEL	RUBBER MALLET	PHILLIPS SCREW	DRILL
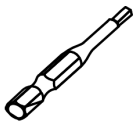			
ALLEN KEY	SAFETY HAT	GLOVES	STEPLADDER(6.5Ft or More)
			
SAFETY GLASSES			

Matters needing attention

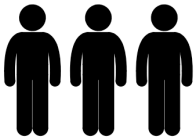	**Three or more people are required for assembly**		**Do not fully tighten screws prior to complete assembly**

STEP1 Assemble the Top Frame

#2		X10
#4		X5
#6		X15
#G2		X100

Notice:
The linking screws in this step are all:Socket Head Bolt(#G2)

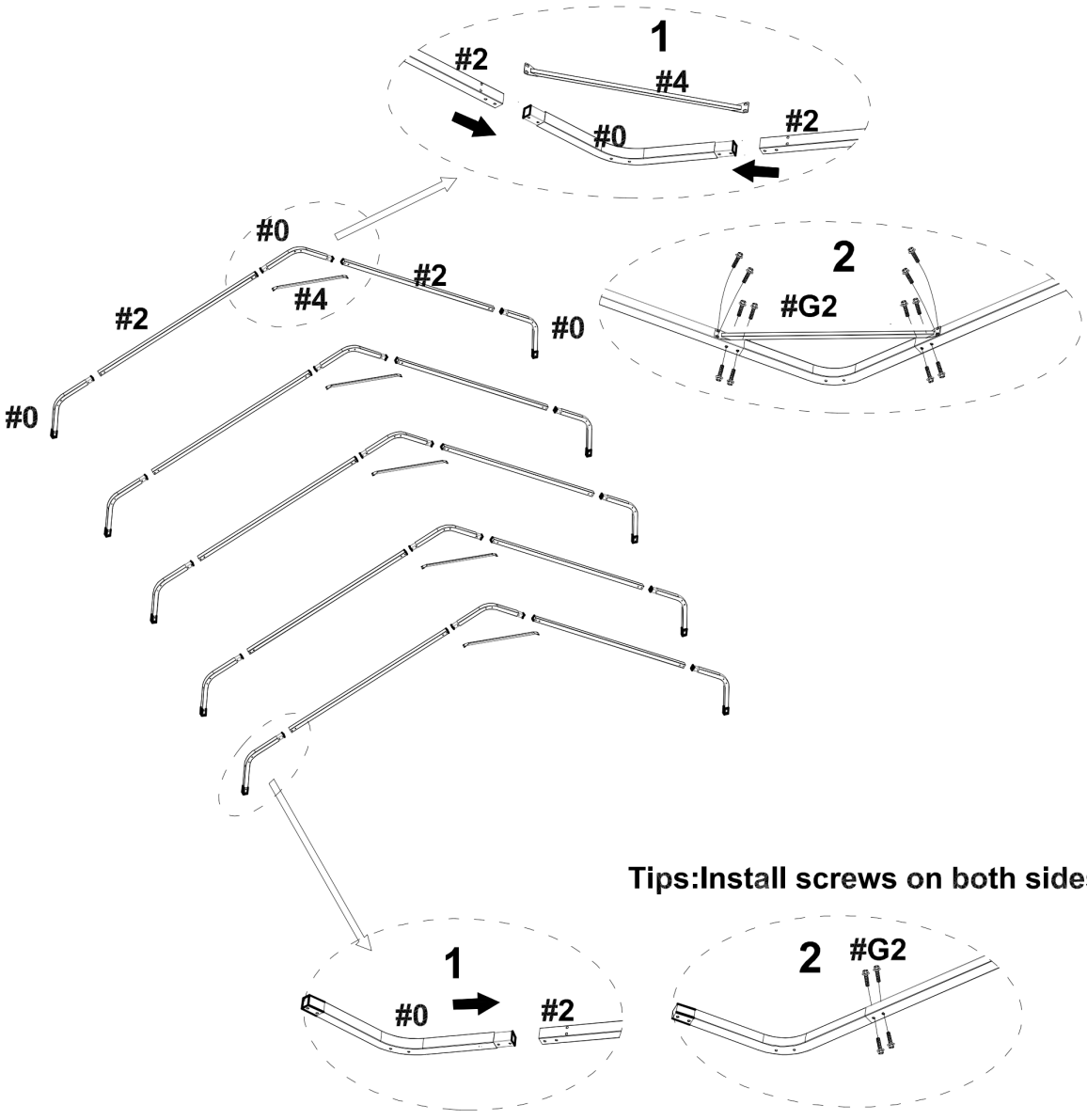

STEP2

#1		X12
#8		X2
#10		X4
#G4		X30

Notice:
The linking screws in this step are all:Socket Head Bolt(#G4)

STEP3 Install the Top-pole

#9		X20
#11		X20
#G2		X80

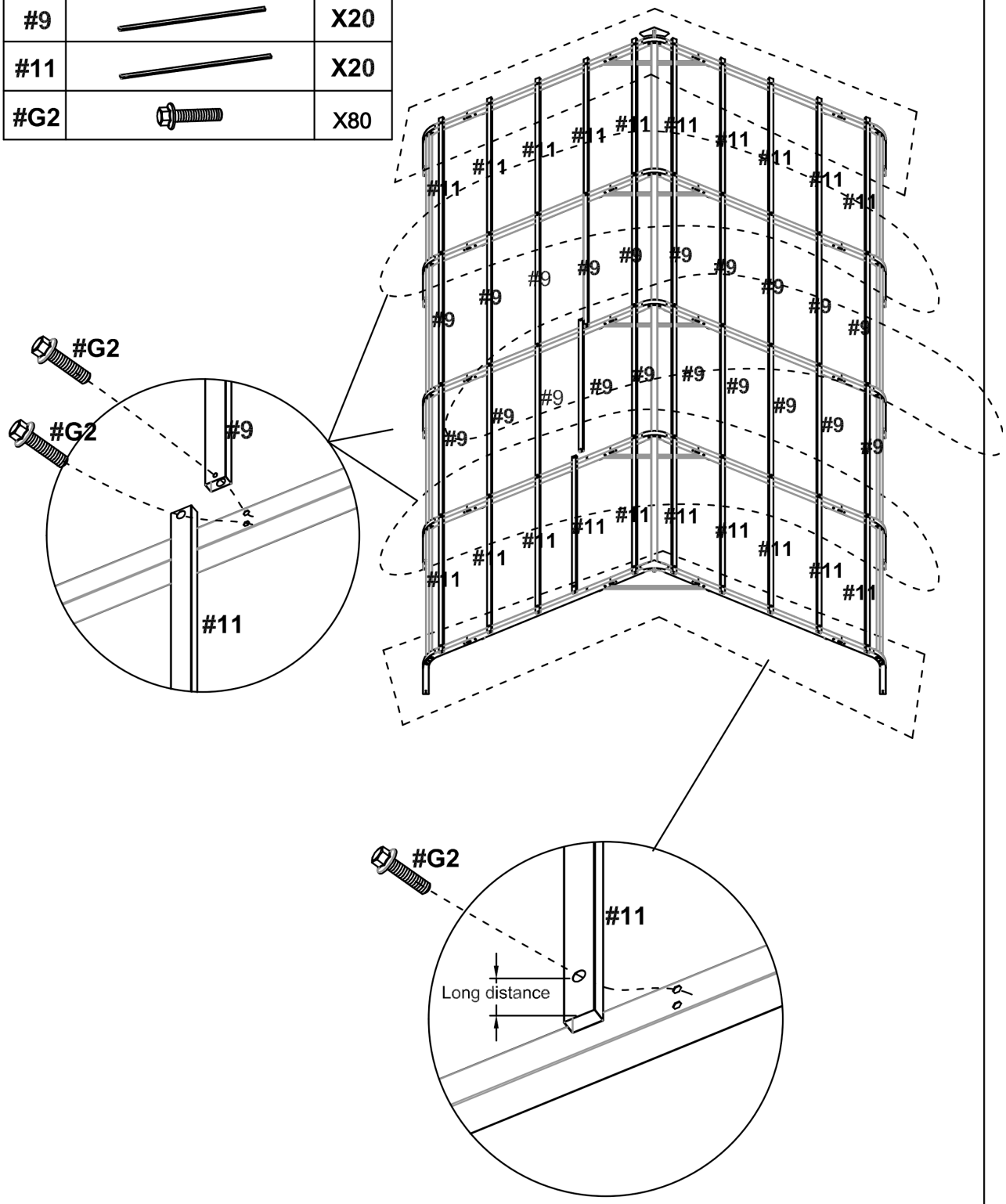

STEP4 **Pre-installed #3 leg tube**

#3		X10

1:First, lift one side with your partner and insert the #3 leg tube into the #0 connector.

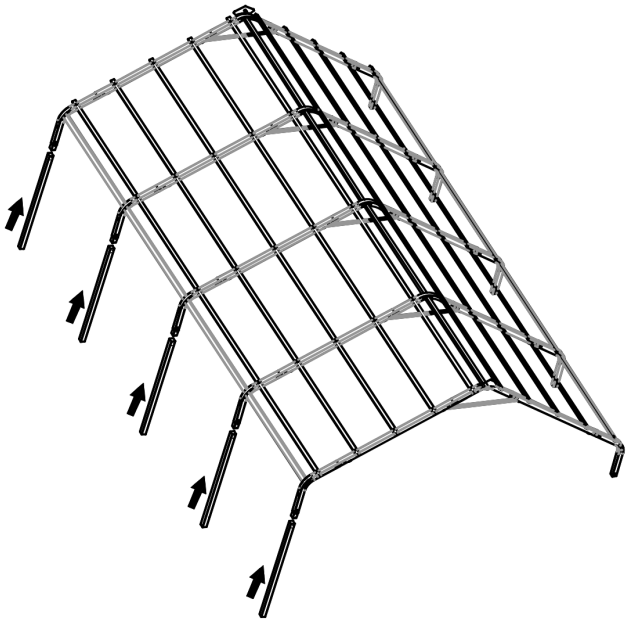

2:Then lift the other side with the partner and insert the #3 leg tube into the #0 connector as well.

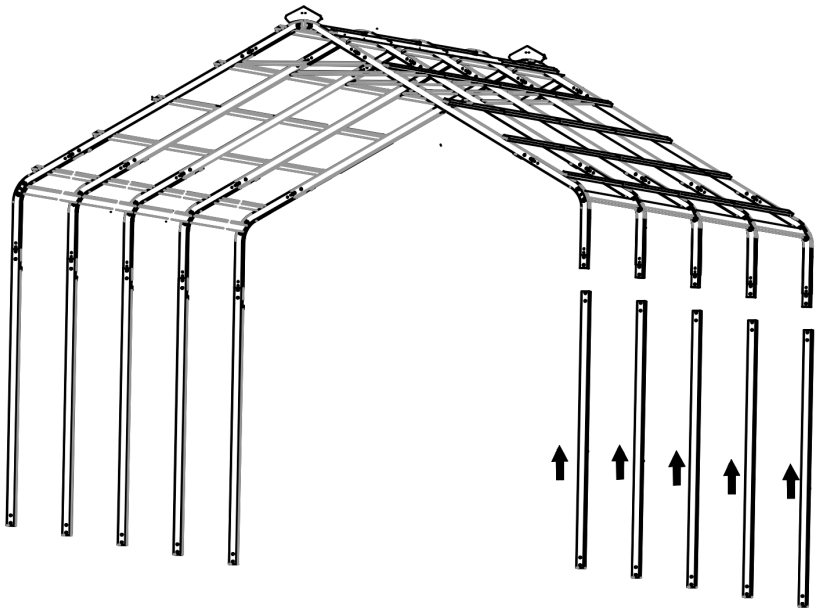

STEP5 Install the Leg pole#3 and Top Reinforcing pole #4 .

#4		X10
#14		X4
#15		X8
#G2		X80
#G4		X20
#G5		X8
#G6		X8

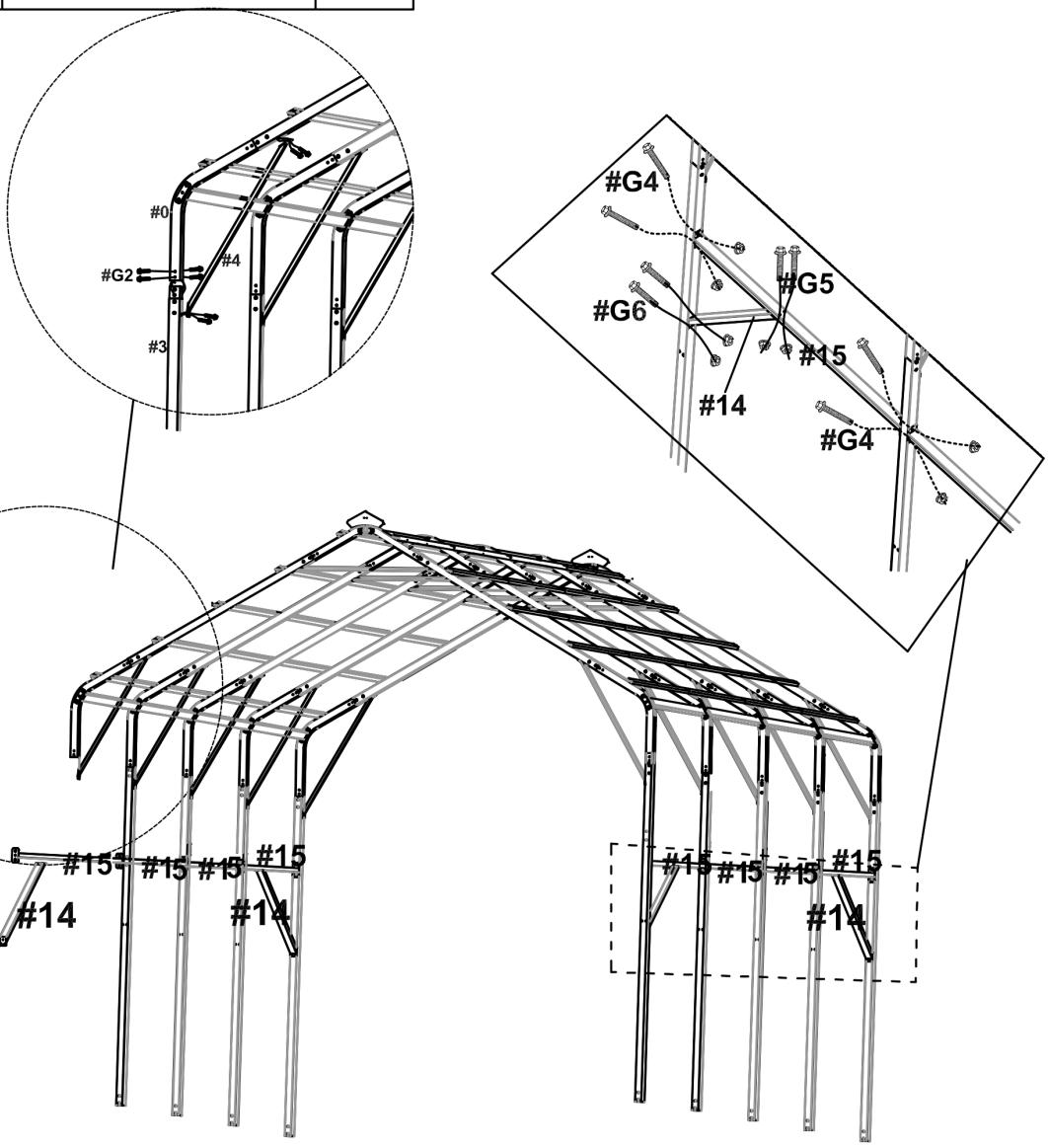

STEP6 Install the Frame

#5		X2
#5a		X6
#7		X6
#G2		X76

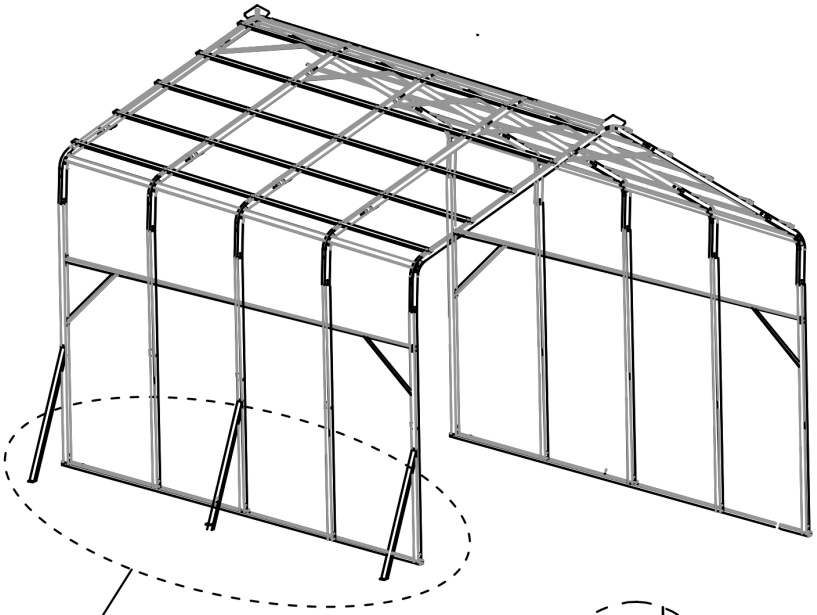

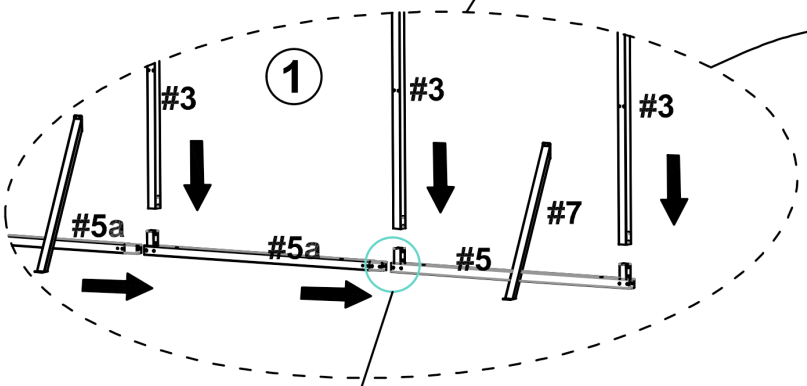

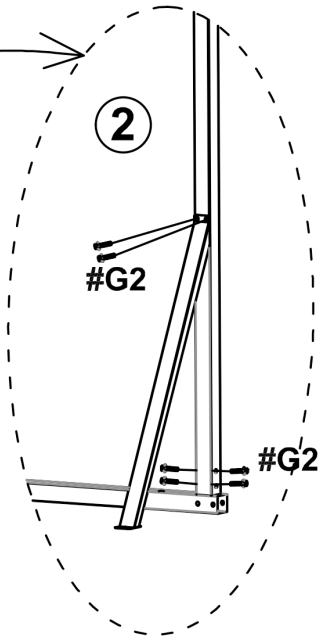

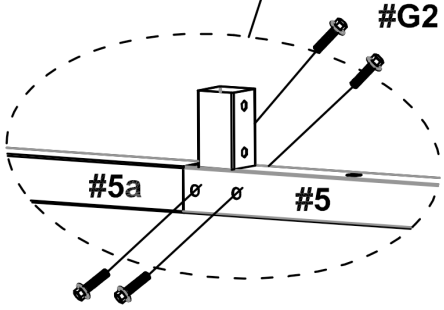

Tips:nstallscrews
on both sides.

STEP7 Install the Short Roof cover #R

#R		X15
#G1		X64

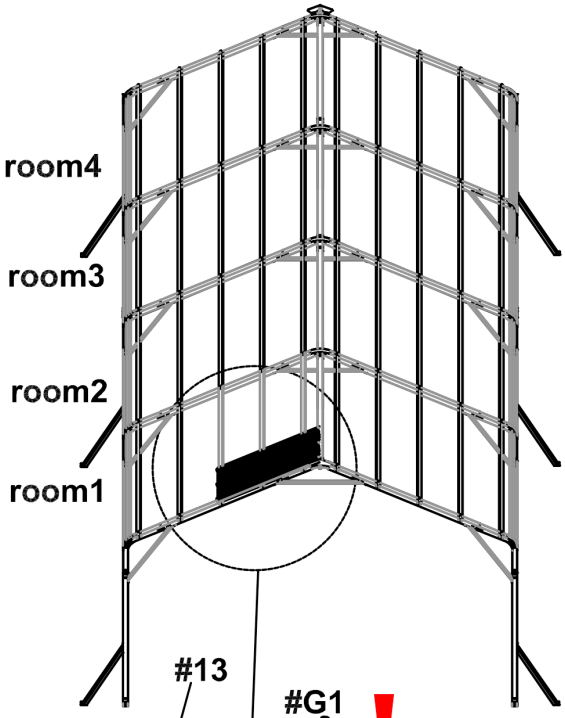

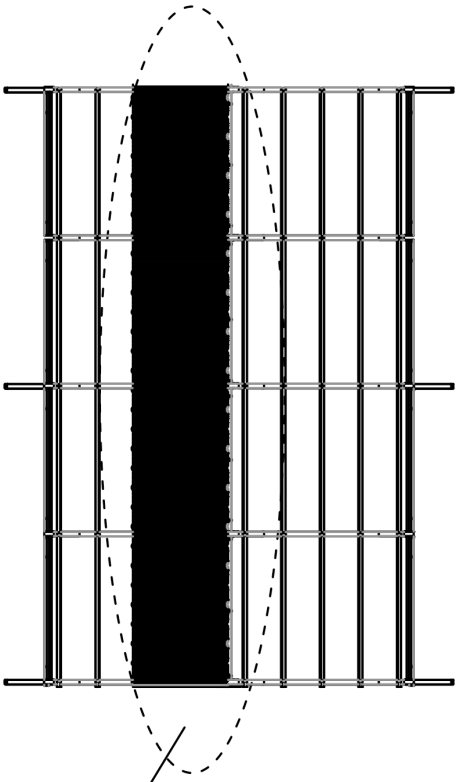

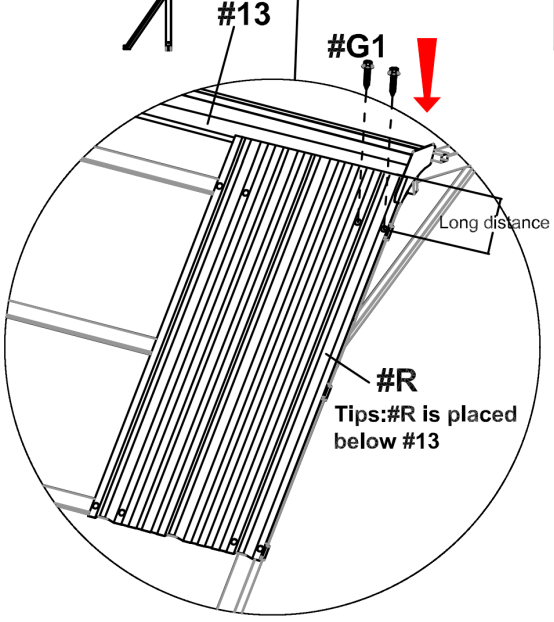

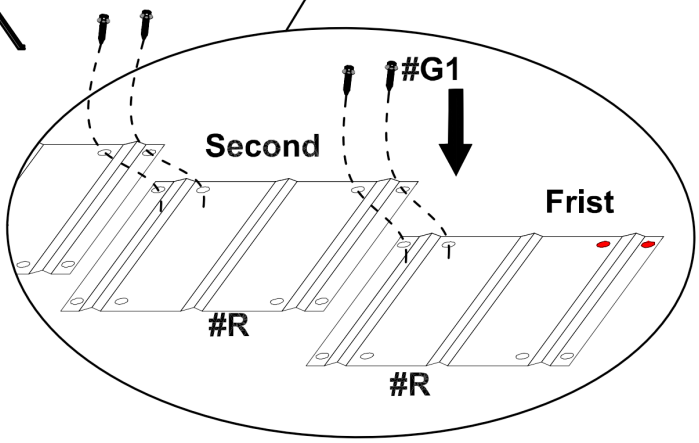

Tips:Only install one red screw hole.

STEP8 Install the Long Roof cover #L

#L		X15
#G1		X32

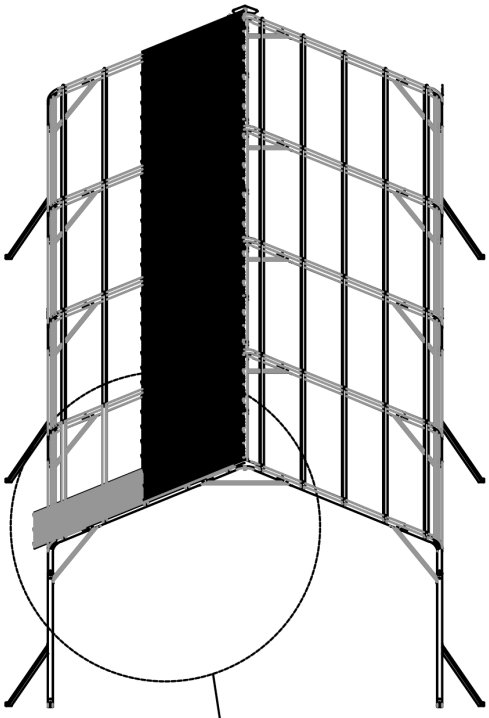

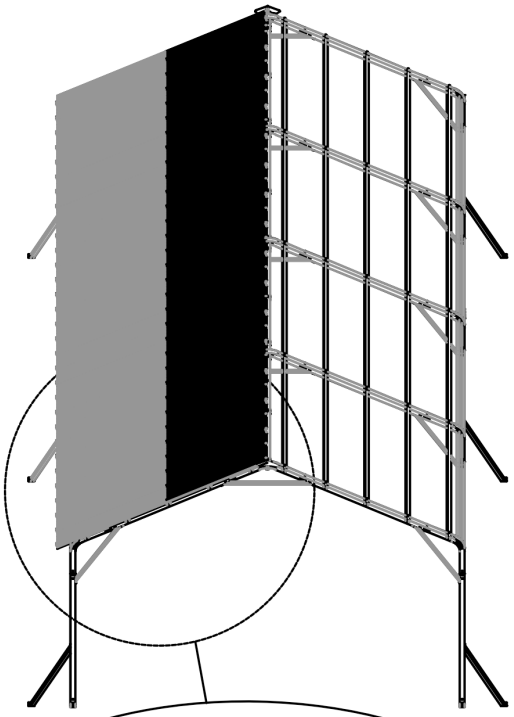

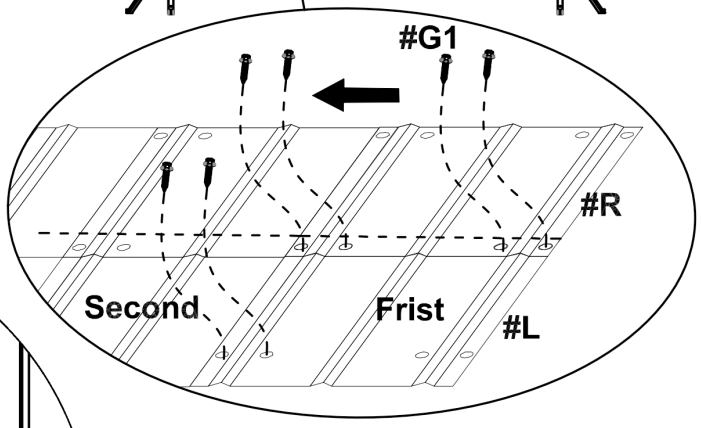

2

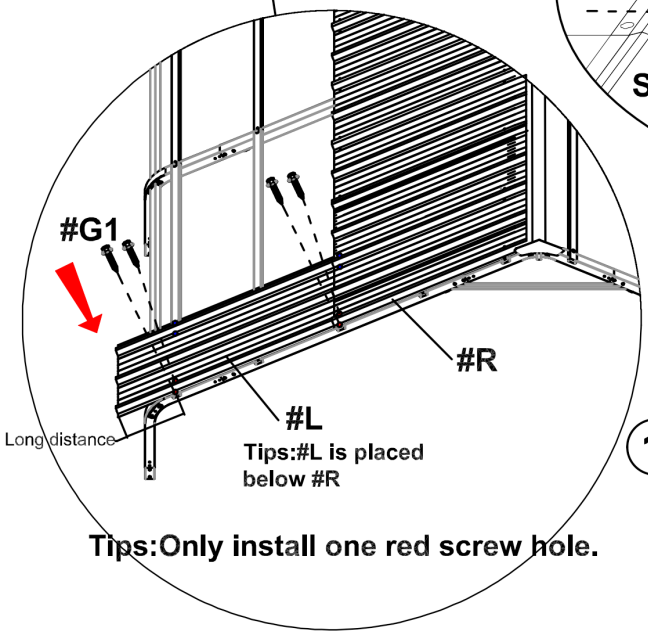

1

Tips:Only install one red screw hole.

STEP9 Install the Support

#12		X12
#G4		X12

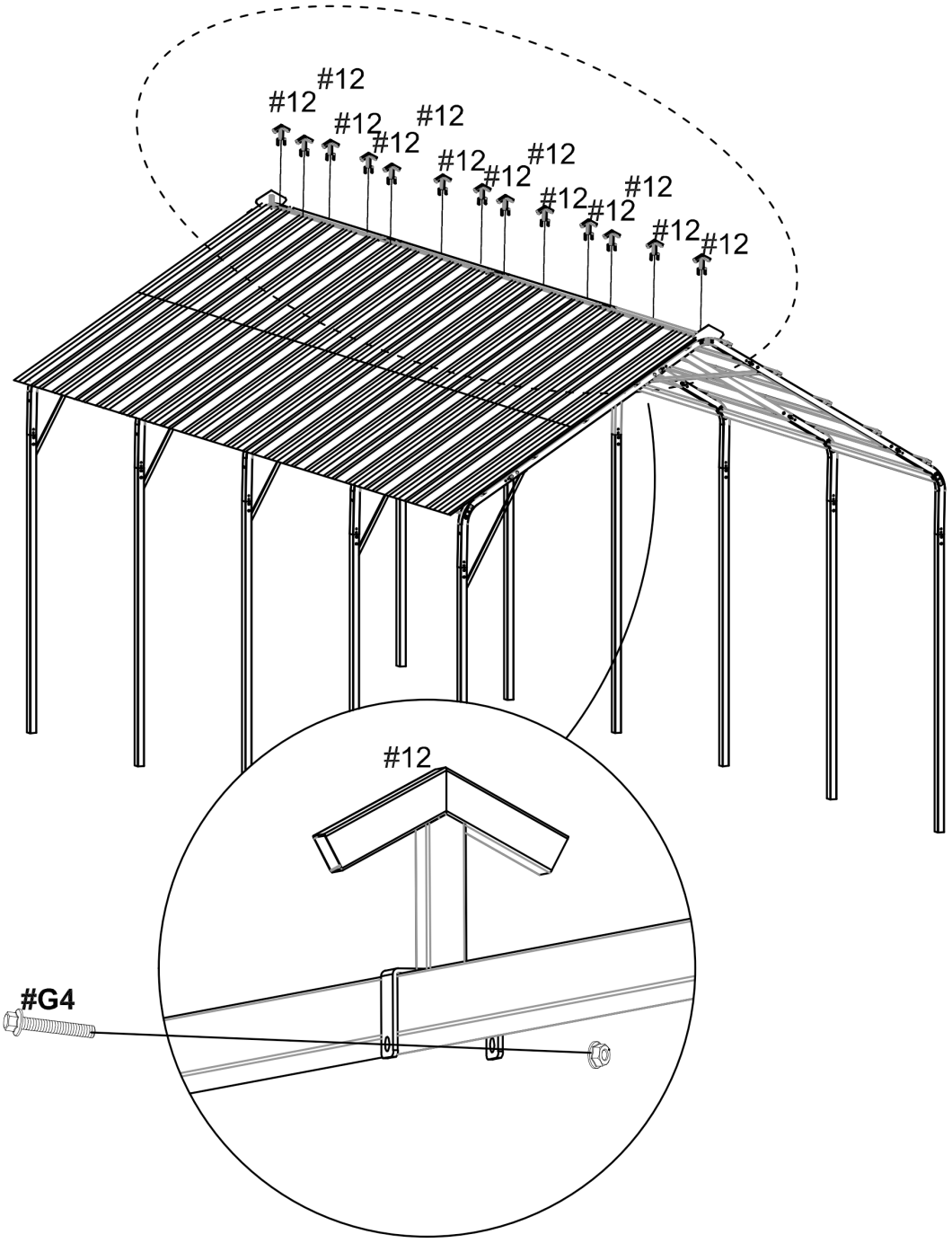

STEP10 Install the Top plate

#13		X4
#G1		X24

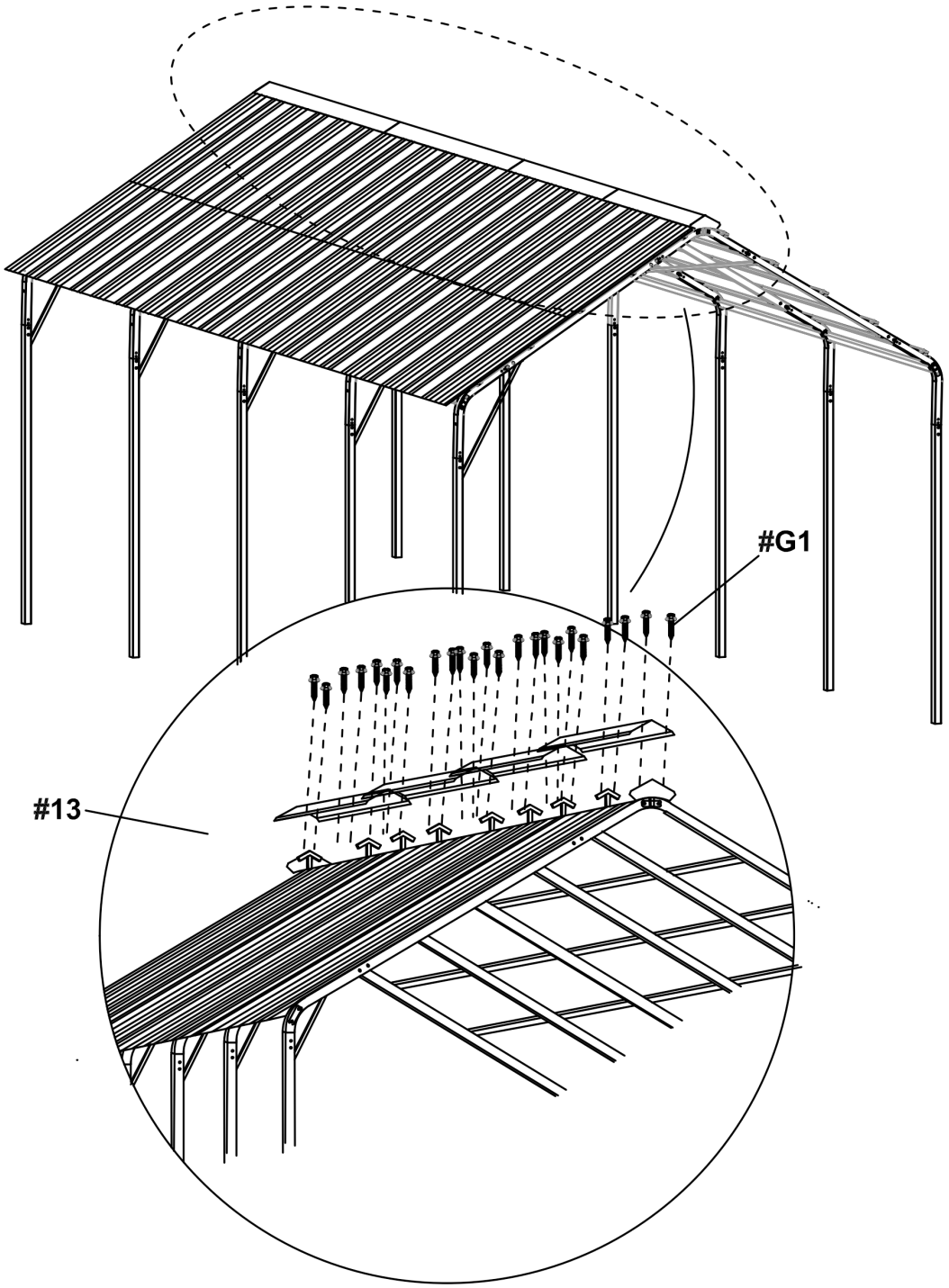

STEP11 **Install the** Right side Roof cover

#R		X15
#L		X15
#G1		X96

Tips:Please use same as the left installation steps for on the right.

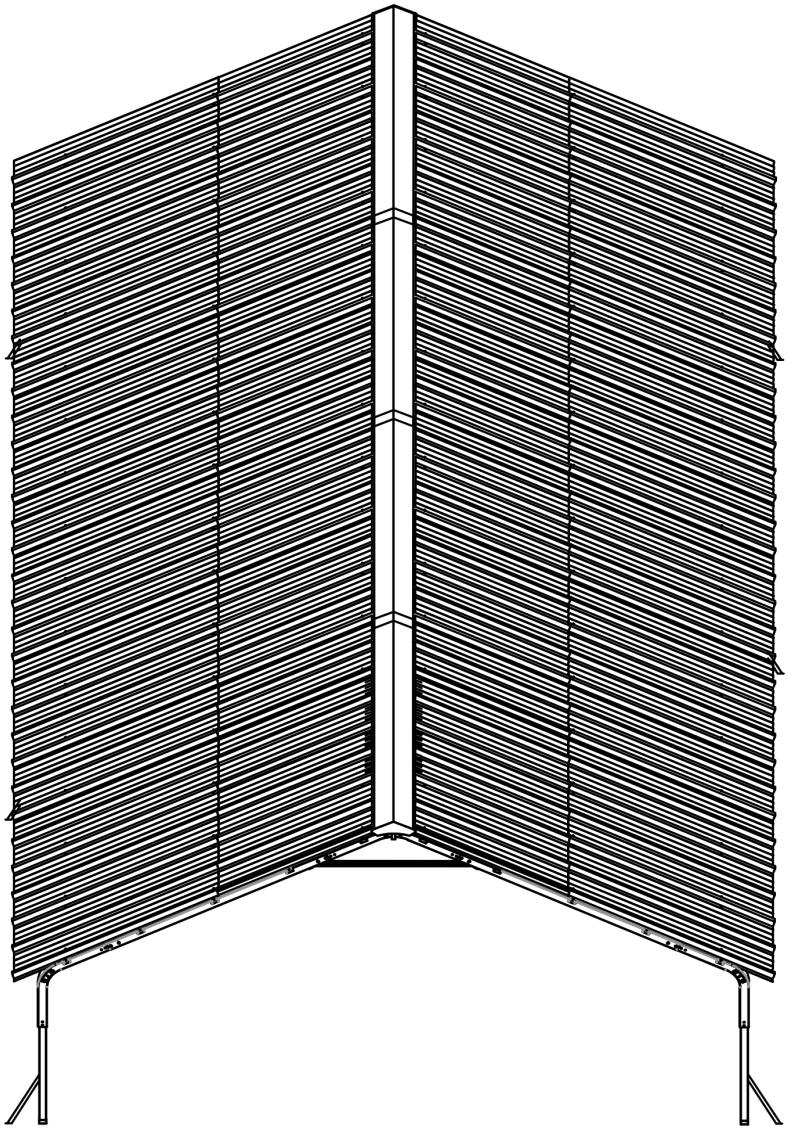

STEP12 Install the Anti-cut Tape(#Y2)

#Y2	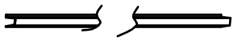	

Notice:
Wrap the Anti-cut Tape(#Y2) around the outer edge of the Roof Covers(#L).

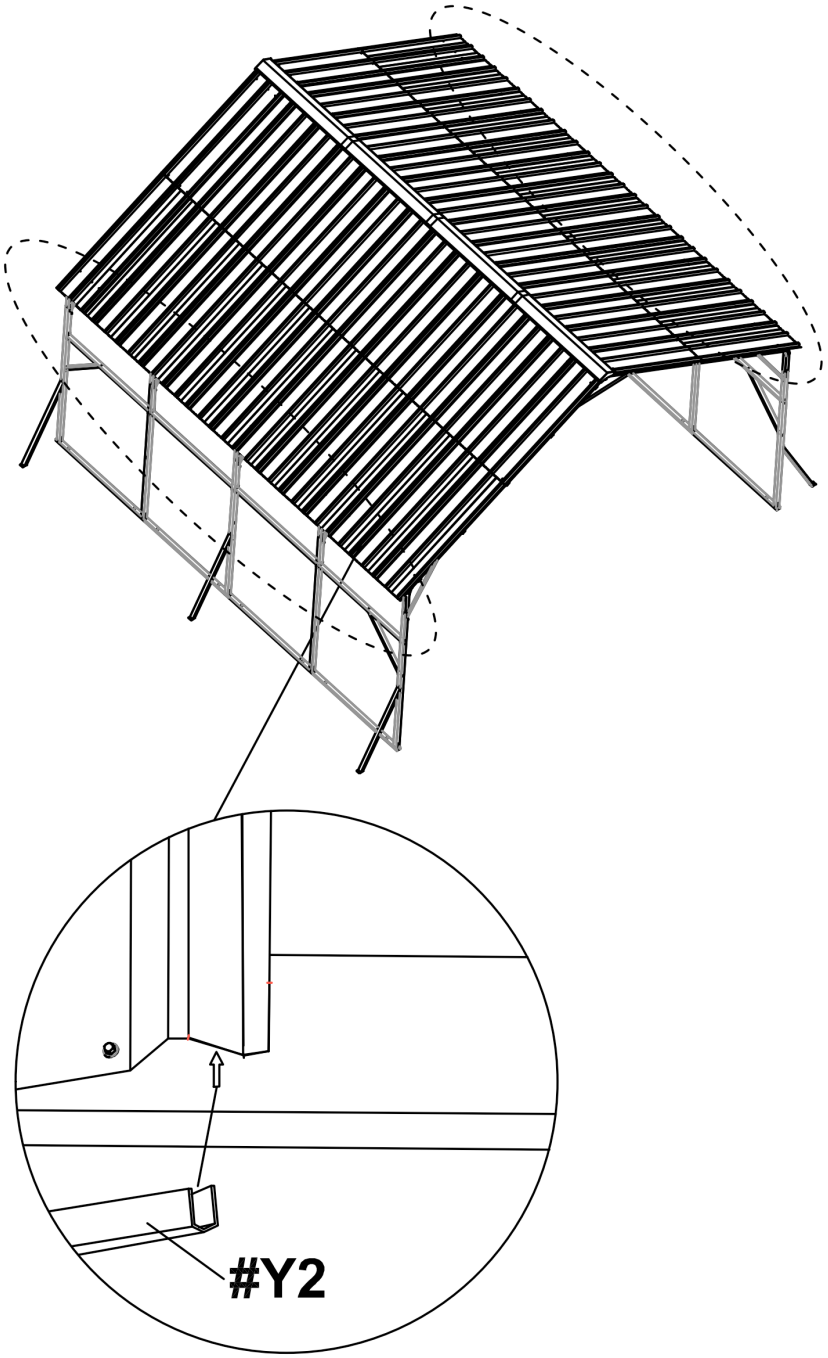

STEP13 Install the Anchor the Carport on the ground

#G3	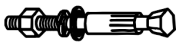	X22

Notice:
The linking screws in this step are all:Expansion screws(#G3)

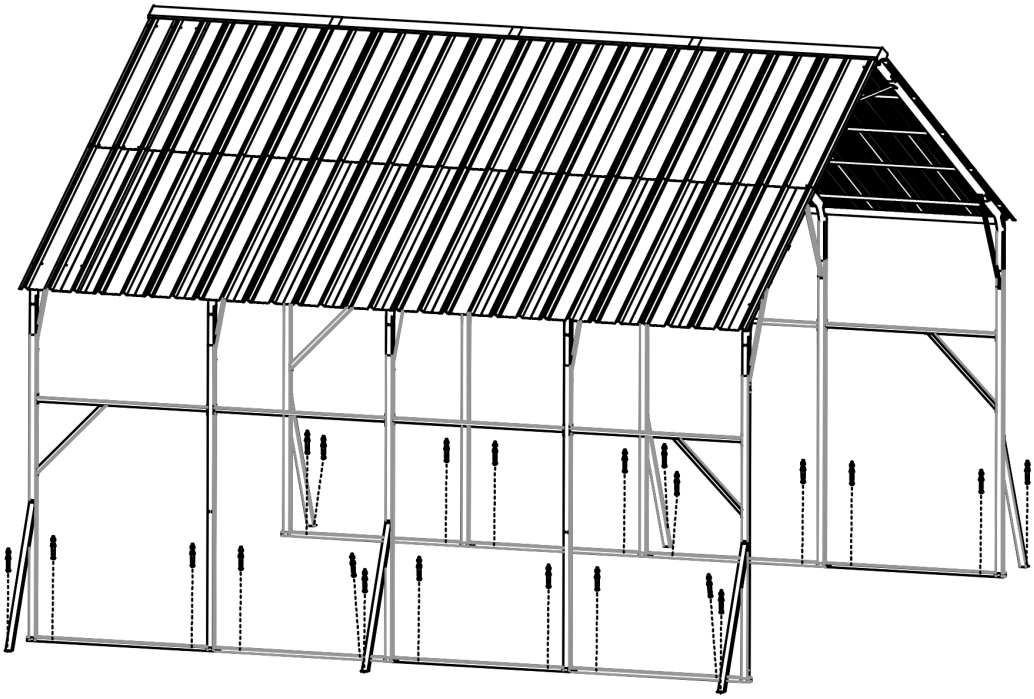

#G3

